Haier

MRV III

Multi-group multi-combination system

R22 INVERTER&HEAT PUMP 50HZ

AV08NMTAIA	AV28NMTAIA
AV10NMTAIA	AV30NMTAIA
AV12NMTAIA	AV32NMTAIA
AV14NMTAIA	AV34NMTAIA
AV16NMTAIA	AV36NMTAIA
AV18NMTAIA	AV38NMTAIA
AV20NMTAIA	AV40NMTAIA
AV22NMTAIA	AV42NMTAIA
AV24NMTAIA	AV44NMTAIA
AV26NMTAIA	AV46NMTAIA
AV28NMTAIA	AV48NMTAIA

SYJS-008-08REV.0

Aug 2008

CONTENTS

MRVIII R22 multi-group multi-combination system

1. Product introduction ---- 5
1.1 MRVIII R22 general information and features ---- 6
1.1.1 Products code explanation ---- 6
1.1.2 Indoor models ---- 6
1.1.3 Combination of outdoor unit ---- 7
1.1.4 Gather pipe assembly ---- 7
1.1.5 Brance pipe ---- 7
1.1.6 Controllers ---- 8
1.1.7 Features ---- 9
1.1.8 Functions and characteristics ---- 9
2. Product design ---- 10
2.1 Refrigerant diagram ---- 11
2.2 Main components ---- 14
2.3 Specification ---- 16
2.4 Performance curves ---- 32
2.5 Noise level ---- 36
3. Installation instruction ---- 44
3.1 Outdoor installation ---- 45
3.2 Indoor installation ---- 71
3.2.1 Ceiling concealed type installation ---- 71
3.2.2 4-way cassette installation ---- 75
3.2.3 Wall mounted unit installation ---- 85
3.2.4 Med ESP duct installation ---- 89
3.2.5 High ESP duct installation ---- 97
3.2.6 Convertible type indoor installation ---- 103
3.2.7 Explanation for indoor pre-set checking hole ---- 122
3.2.8 Controller functions and installation ---- 124
3.3 Circuit diagram ---- 131
3.4 Electric installation ---- 142
4. Debugging ---- 146
4.1 Trial operation and the performance ---- 147
4.2 Control function ---- 160
4.3 Management system H - CACS ---- 176
1. General information ---- 176
2. Installation instruction ---- 177
3. Cautions in installation ---- 182
4. About the ammeter ---- 183
5. Dip switch setting ---- 184
6. Indoor unit control ---- 197
6.1 Indoor PCB ---- 197
6.2 Wired controller ---- 198
7. Outdoor control ---- 201
5. Maintenance ---- 207
5.1 Trouble diagnose ---- 207
5.2 Trouble shooting ---- 210
5.3 Sensor characteristic ---- 232
APPENDIX ---- 236
1. Saturated R22 thermodynamic characteristic ---- 236
2. Saturated R407C thermodynamic characteristic ---- 237
3. Enthalpy-humidity chart ---- 238
4. Outdoor performance with different indoor capacity ---- 239
5. Indoor performance with different temperature ---- 344
6. Air flow and static pressure curves ---- 353

MRV III R22 multi-group multi-combination system

Outdoor single module:

AV08NMTAIA
AV10NMTAIA

AV12NMTAIA
AV14NMTAIA
AV16NMTAIA

Outdoor in combination:

18/20HP	22/24/26HP	28/30/32HP	34/36HP	38/40/42HP	44/46/48HP

horse power	model	combination					combination	max. indoors	max. indoor capacity
		8HP	10HP	12HP	14HP	16HP			
8HP	AV08NMTAIA	1					none	13	110~290
10HP	AV10NMTAIA		1				none	16	140~360
12HP	AV12NMTAIA			1			none	19	165~435
14HP	AV14NMTAIA				1		none	20	200~520
16HP	AV16NMTAIA					1	none	20	225~585
18HP	AV18NMTAIA	1	1				HZG-22C	20	255~655
20HP	AV20NMTAIA		2				HZG-22C	20	280~725
22HP	AV22NMTAIA		1	1			HZG-22C	22	305~795
24HP	AV24NMTAIA		1		1		HZG-32C	32	340~880
26HP	AV26NMTAIA		1			1	HZG-32C	32	365~945
28HP	AV28NMTAIA			1		1	HZG-32C	32	390~1020
30HP	AV30NMTAIA				1	1	HZG-32C	32	425~1105
32HP	AV32NMTAIA					2	HZG-32C	32	450~1170
34HP	AV34NMTAIA		2		1		HZG-38C	34	480~1245
36HP	AV36NMTAIA		2			1	HZG-38C	36	505~1310
38HP	AV38NMTAIA		1	1		1	HZG-38C	38	530~1380
40HP	AV40NMTAIA		1		1	1	HZG-48C	40	565~1465
42HP	AV42NMTAIA		1			2	HZG-48C	40	590~1530
44HP	AV44NMTAIA			1		2	HZG-48C	40	615~1605
46HP	AV46NMTAIA				1	2	HZG-48C	40	650~1690
48HP	AV48NMTAIA					3	HZG-48C	40	675~1755

Indoor unit:

LOW ESP DUCT TYPE

AD072MLAIA
AD092MLAIA
AD122MLAIA
AD142MLAIA
AD162MLAIA
AD182MLAIA
AD242MLAIA

4-WAY CASSETTE TYPE / PB-700IB

AB072MCAHA
AB092MCAHA
AB122MCAHA
AB142MCAHA
AB162MCAHA

4-WAY CASSETTE TYPE / PB-950JB

AB182MCAIA
AB242MCAIA
AB282MCAIA

4-WAY CASSETTE TYPE / PB-950JB

AB322MCAIA
AB382MCAIA
AB482MCAIA

MED ESP DUCT TYPE

AD322MMAHA
AD382MMAHA
AD482MMAHA

WALL MOUNTED TYPE

AS072MCAHA
AS092MCAHA
AS122MCAHA
AS142MCAHA
AS162MCAHA
AS182MCAHA

HIGH ESP DUCT TYPE

AD182MHAHA
AD242MHAHA
AD282MHAHA
AD302MHAHA
AD382MHAHA
AD482MHAHA

CONVERTIBLE TYPE

AC092MCAHA
AC122MCAHA
AC162MCAHA
AC182MCAHA
AC242MCAHA

AC382MFAHA
AC482MFAHA

Product introduction

1.1 *MRV III R22* general information and features

1.1 *MRVIII* general information and features

There are 5 basic modules including 8HP, 10HP, 12HP, 14HP, 16HP outdoor in the inverter multi-group multi-combination system. And the five modules can consist the system with capacity from 8HP to 48HP, which is the third generation of C-MRV. Major features are energy saving, intelligent control and precise temperature control. Adopts power source of 3-phase,380V,50/60Hz; high efficiency external-oil-supplying compressor, cross oil equalization operation, control the refrigerant flow by the electronic expansion valve (EEV); collects the data by the pressure sensor and temperature sensor to adjust the compressor capacity; because of the technology of multi compressors in series, the back up running more perfect, in addition, it includes the oil equalization, oil return, refrigerant return, refrigerant spray, unloading assistant control, etc.

1.1.1 Products code explanation

Model: A V 08 N M T A I A

- A — Climate type: T1
- I — Design number (A stands for fixed frequency type, I stands for inverter type)
- A — Product type: A stands for heat pump type, refrigerant is R22
- T — Appearance character
- M — Product series: M stands for MRV II
- N — Applicable voltage: 2 stands for 220~230V/50Hz, N stand for 380~400VAC/50Hz
- 08 — Cooling / Heating capacity,08=8HP; 10=10HP
- V — Product type : "U" stands for single outdoor unit, "V" stands for combination type, "B" stands for cassette type, "C" stands for convertible type, "D" stands for duct, "S" stands for split type, "E" stands for ceiling concealed type,
- A — Air Conditioner

1.1.2 Indoor models

Model \ Capacity(HP)		072 (0.8)	092 (1.0)	122 (1.25)	142 (1.5)	162 (1.7)	182 (2.0)	242 (2.5)	282 (3.0)	322 (3.2)	382 (4.0)	482 (5.0)
Ceiling concealed type	AD*MLAIA	●	●	●	●	●	●	●				
Cassette type	AB*MCAHA	●	●	●	●	●						
Cassette type	AB*MCAIA						●	●	●	●	●	●
Duct type	AD*MMAHA									●	●	●
Duct type	AD*MHAHA						●	●	●	●	●	●
Wall mounted	AS*MCAHA	●	●	●	●	●	●					
Convertible	AC*MCAHA					●	●	●				
Convertible	AC*MFAHA										●	●

1.1.3 Gather pipe assembly(optional)

Outdoor horse power	Gather pipe model	Remarks
8~16HP	none	
18~22HP	HZG-22C	for 2 modules
20~32HP	HZG-32C	for 2 modules
34~38HP	HZG-38C	for 3 modules
40~48HP	HZG-48C	for 3 modules

1.1.4 Branch pipe(optional)

Total capacity of indoor unit(100W)	Model
Less than 335	FQG-B335
Not less than 335 and less than 680	FQG-B680
Not less than 680 and less than 960	FQG-B960
Not less than 960	FQG-B1350

1.1.5 Pipe selection between indoor and branch pipe

Total capacity of indoor unit(100W)	Gas pipe	Liquid pipe
Less than 101	∅15.88	∅9.52
More than 101 but less than 180	∅19.05	∅9.52
More than 180 but less than 370	∅28.58	∅12.7
More than 370 but less than 540	∅31.8	∅15.88
More than 540 but less than 700	∅38.1	∅19.05
More than 700 but less than 1100	∅44.4	∅22.22
More than 1100 but less than 1300	∅50.8	∅22.22
More than 1300	∅54.1	∅25.4

1.1.6 Controllers

Remote controller	Function	Illustration
YR-H71	☐ All the standard functions	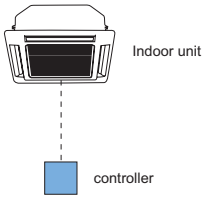

Wired controller	Function	Illustration
YR-E12	☐ Can control at most 16 indoor units synchronously ☐ A indoor unit can connect with 2 standard(simple) controllers (Master/Slave control) ☐ Timing function	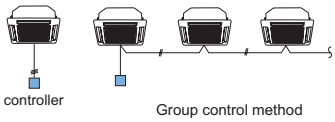

Central controller(1:64)	Function	Illustration
ICR01	☐ Can monitor max.64 groups of indoor unit state: running mode, fan speed, set temp., swing and vent. etc, also will display indoor filter icon; can set below three modes: the later entering indoor in priority, central control and lock; ☐ Can monitor indoor failure and save the failure to be checked. ☐ Receive the external signal such as the fire alarm, make the interconnect control	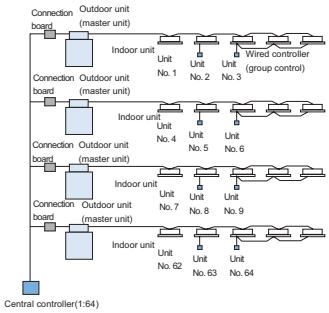

1.1.7 Features

(1) Multi-group multi-combination system, realize large capacity equipment

(2) Check system pressure on realtime to realize energy saving operation

(3) Compressor recycling control technology, start up in sequence, prolong the equipment life

(4) Sub-cooling technology to realize long pipe design

1.1.8 Functions and characteristics

(1) Large capacity control technology

The application of cross oil return control technology and the refrigerant balance technology among outdoors and among compressors solves the problem of oil balance and refrigerant balance, because of multi compressors, which realizes the multi-group multi-combination control.

(2) Super long piping design

Through the efficient control of electronic expansion valve, increasing the sub-cooling state, which will be against the instant evaporating of liquid refrigerant in the super long pipe, thus avoid the gas refrigerant flowing into the indoor in higher place, and keep the cooling effect well.

(3) Recycling control, reliable design

The compressor startup in sequence will not only balance the running time among modules, but also control the recycling startup/stop among compressors in one module, to balance the startup time of compressor in one module, which can make the system more reliable and prolong the equipment life.

(4) Different control, realize energy saving operation

In every module there are one high pressure switch and one low pressure switch, which will adjust the target pressure automatically in the system according to the pipe length on field and the outdoor ambient temperature. The unit will modify the output capacity on realtime due to the target pressure and the current actual pressure to ensure the most energy saving. The unit also can protect the system due to the detected pressure to keep the compressor in the reliable range all the time.

The system adopts the high efficient dual-grooved heat exchanger, 4-way air return technology to enhance the heat exchange ratio up to 30%. Also the system optimizes the frequency distribution, and utilizes the outdoor heat exchanger to the max limit. According to the indoor request, the system will start up the inverter compressor in each module, then start up the second, and the third compressors in every module, to make the unit running more energy saving.

(5) 3-pipe design, simple installation, easy maintenance

Through the oil balance pipe and the refrigerant balance pipe, on the basis of realizing the oil equalization and the refrigerant balance, simplify the installation.

The unit is equipped with the 7-segment digital tube, supply the perfect human-machine interface. You can get the running parameters through the digital tube connecting to the PCB and the rotary switch.

Product design

2.1 Refrigerant diagram

2.2 Main components

2.3 Specification

2.4 Performance curves

2.5 Noise level

2.1 Refrigerant diagram

8HP outdoor:

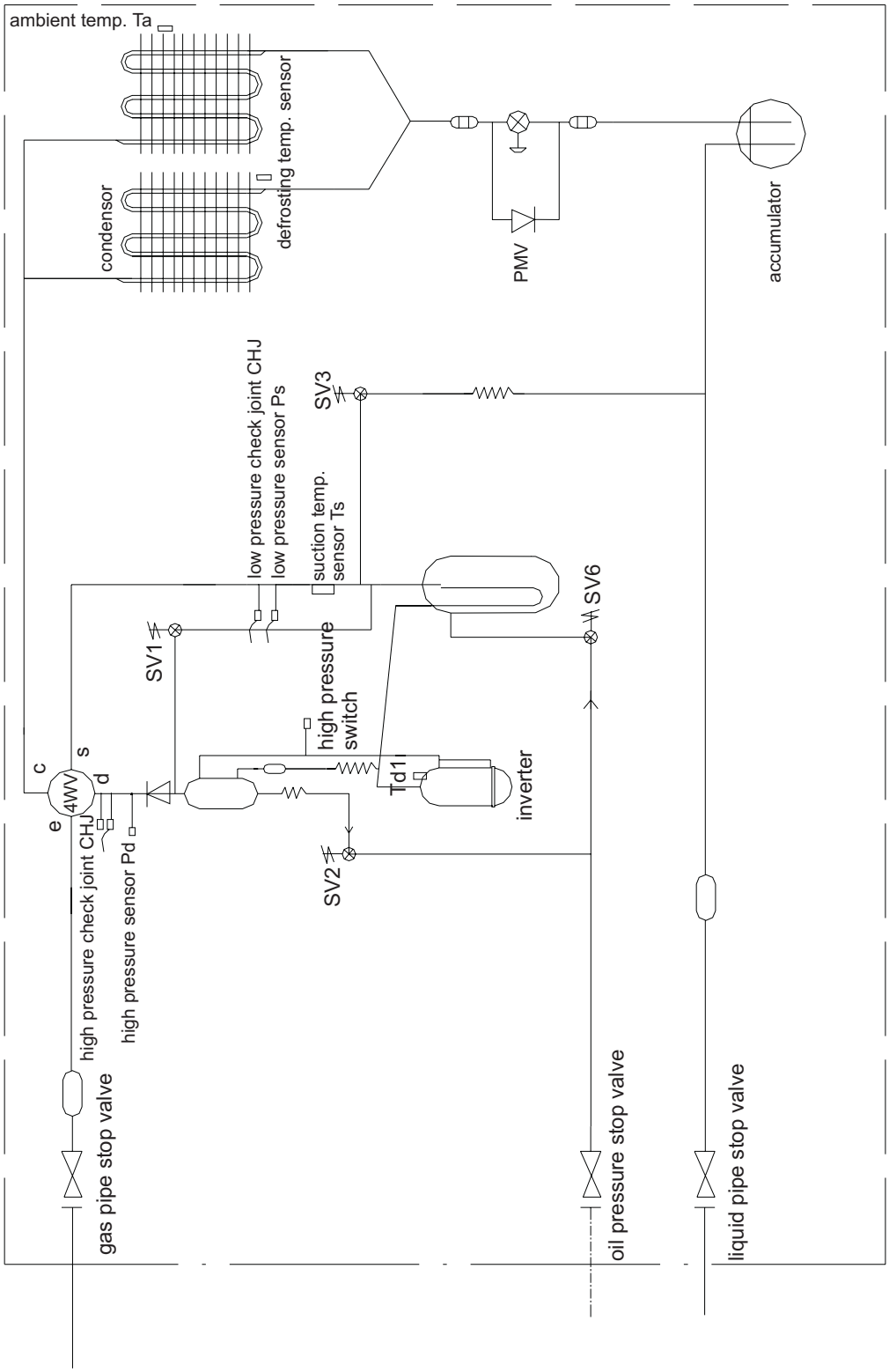

10, 12HP outdoor:

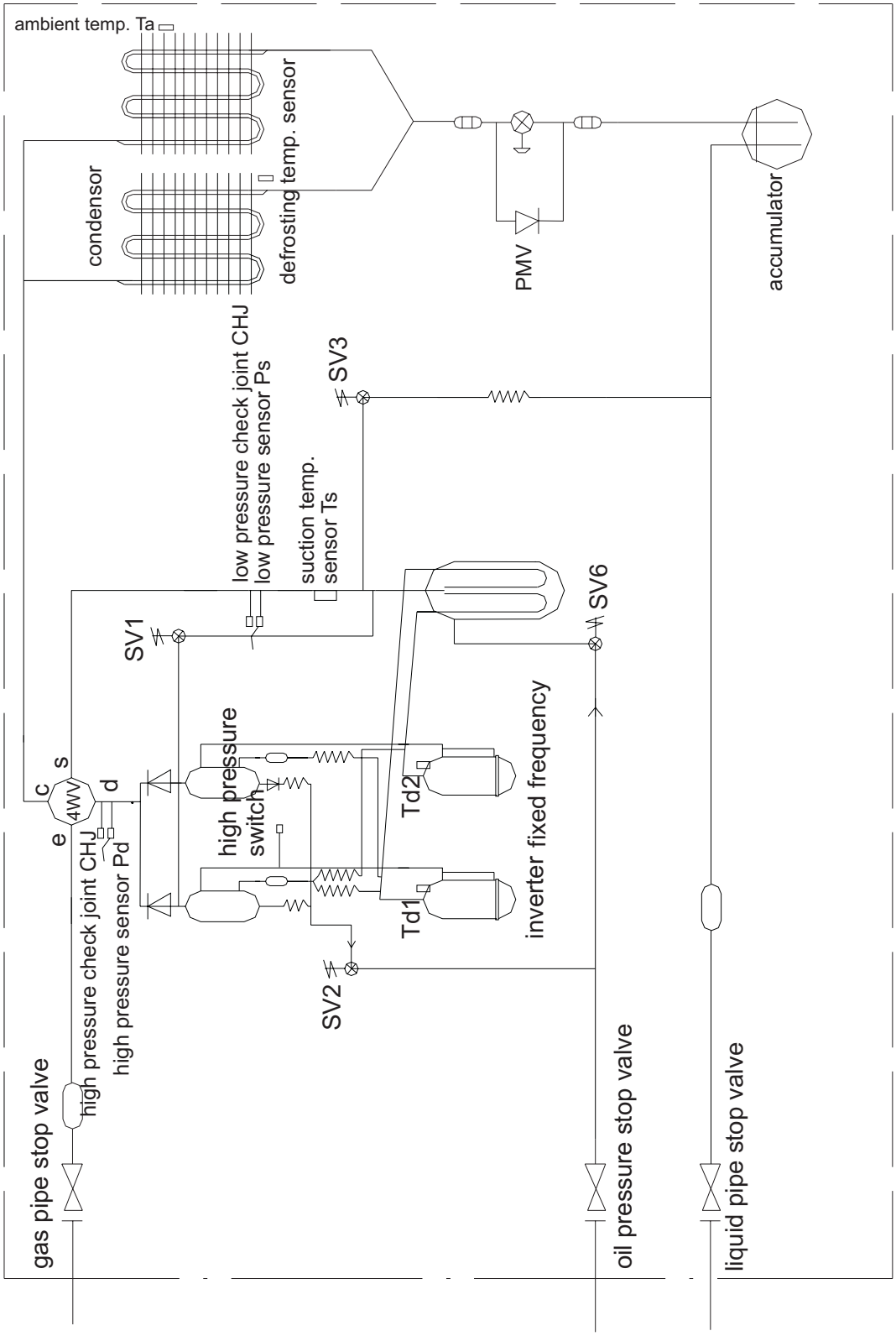

14, 16HP outdoor:

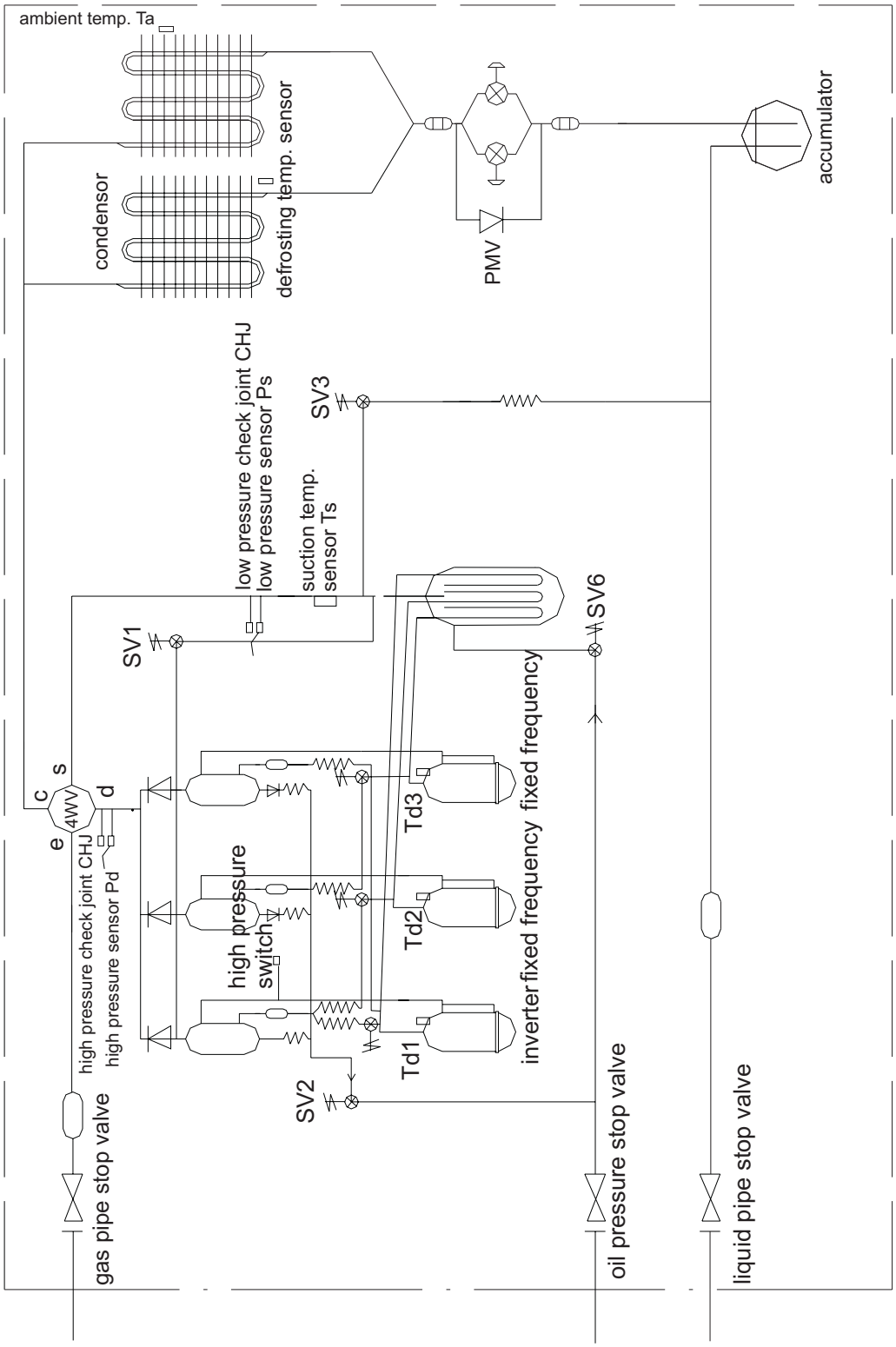

2.2 Main components

Outdoor unit:

Part name	Sign	Function	Data
inverter compressor	MC1	capacity control, meet indoor load request by adjusting the frequency	1.436±7%Ohm(20 °C) 401DHV-64D2Y
fixed frequency compressor 1	COMP1		2.7±7%Ohm(20 °C) 503DH-80C2Y
fixed frequency compressor 2	COMP2		2.7±7%Ohm(20 °C) 503DH-80C2Y
high pressure switch	Hs	High pressure protection	3.3Mpa, OFF
high pressure sensor	Pd	in heating,compressor frequency correction,abnormal pressure protection	PS8040A150NH4-H
Low pressure sensor	Ps	in cooling,compressor frequency correction,abnormal pressure protection	PS8040A150NH4-L
Electronic ex-pansion valve	PMV	in heating,refrigerant flow control	HAM-3.0
Solenoid valve	SV1	reduce high/low pressure drop on compressor startup; high/low pressure protection; light load control	AC220V, open when power is on; close when power is off
	SV2	oil equalization control	
	SV3	over heating control in discharging	
	SV6	balance the refrigerant, oil equalization control	
4-way valve	4WV	change over between cooling and heating	AC220V,electrified in heating; not electrified in cooling or defrosting
Temp. sensor	Te	check frost condition of outdoor heat exchanger	R(25℃)=10K B(25/50℃)=3700K
	Td1	Detect the discharge temp. of inverter compressor	R(80℃)=50K B(25/80℃)=4450K
	Td2	Detect the discharge temp. of fixed frequency compressor 1	
	Td3	Detect the discharge temp. of fixed frequency compressor 2	
	Ts	Detect the sunction temp. of compressor, EEV open control	R(25℃)=10K B(25/50℃)=3700K
	Ta	detect ambient temp.,set primary setting for fan speed and EEV open angle	
Heater	CH	used to heat liquid refrigerant in compressor	40W, 220V

Indoor unit

Part name	Sign	Function	Data
Electronic expansion valve	PMV	refrigerant flow control	CAM-BD22FKS-1
			CAM-BD24FKS-1
			HAM-BD30FKS-1
Temp. sensor	TC1	Detect gas pipe temp.	R(25℃)=10K B(25/50℃)=3700K
	TC2	Detect liquid pipe temp.	
	Ta1	Detect indoor ambient temp.	R(25℃)=23K B(25/50℃)=4200K
	Ta2	Detect temp. of wired controller	

2.3 Specifications

(1) Outdoor unit

Equivalent HP		8	10	12	14
Model		AV08NMTAIA	AV10NMTAIA	AV12NMTAIA	AV14NMTAIA
Combination mode		single module	single module	single module	single module
Nominal cooling capacity(KW)		22.6	28	33.5	40.0
Nominal heating capacity(KW)		25	31.5	37.5	45.0
Heating capacity at low temp.(KW)		19.5	24.3	29.3	35.1
Power source		3N~, 380V, 50Hz			
Electrical characteristics	Cooling: Operating/Max. current(A)	13.1/18.9	16.1/22.2	19.1/25.5	23.8/32.0
	Cooling: Operating/Max. consumption(kw)	8.0/11.5	9.8/13.5	11.6/16.5	14.5/19.5
	Heating: Operating/Max. current(A)	11.5/18.1	15.8/21.4	18.2/24.6	23.0/29.6
	Heating: Operating/Max. consumption(kw)	7.0/11.0	9.6/13.0	11.1/15.0	14.0/18.0
	Power consumption when heating at low temp.(kw)	6.5	9.0	10.5	13.4
	Output power of outdoor motor(KW)	0.35		0.30*2	
Exterior dimensions (mm)		990*750*1700		1390*750*1700	
Weight (Kg)		210	235	275	300
Exterior colour		ivory			
Compressor model		scroll type			
Compressor quantity		1	2	2	3
Outdoor airflow (m3/h)		167		200	
Refrigerant (R22) charge (Kg)		8	10	14	16
Refrigerant oil	Oil model	SUNISO4GDI-HT			
	Oil amount(L)	1.8+2.5	1.8+1.8+3.0	1.8+1.8+3.0	1.8+1.8+1.8+4.0
Piping dimension	Gas piping(mm)	∅25.4	∅28.58	∅31.8	∅34.9
	Liquid piping(mm)	∅12.7		∅15.88	
	Equipoise/Oil equalization piping(mm)	∅9.52			
Noise level(dB(A))		57	58	60	60

Equivalent HP			16	18	20
Model			AV16NMTAIA	AV18NMTAIA	AV20NMTAIA
Combination mode			single module	AV08+AV10	AV10+AV10
Nominal cooling capacity(KW)			45.0	50.6	56.0
Nominal heating capacity(KW)			50.0	56.5	63.0
Heating capacity at low temp.(KW)			39.0	43.8	48.6
Power source			3N~, 380V, 50Hz		
Electrical characteristics	Cooling	Operating/Max. current(A)	27.1/35.3	29.2/41.1	32.2/44.4
		Operating/Max. consumption(kw)	16.5/21.5	17.8/25.0	19.6/27.0
	Heating	Operating/Max. current(A)	24.6/33.7	27.3/39.5	31.6/42.8
		Operating/Max. consumption(kw)	15.0/20.5	16.6/24.0	19.2/26.0
	Power consumption when heating at low temp.(kw)		14.3	15.5	18
	Output power of outdoor motor(KW)		0.30*2	0.35+0.35	0.35+0.35
Exterior dimensions (mm)			1390*750*1700	(990*750*1700)*2	(990*750*1700)*2
Weight (Kg)			300	445	470
Exterior colour			ivory		
Compressor model			scroll type		
Compressor quantity			3	3	4
Outdoor airflow (m3/h)			200	167*2	167*2
Refrigerant (R22) charge (Kg)			16	18	20
Refrigerant oil	Oil model		SUNISO4GDI-HT		
	Oil amount(L)		1.8+1.8+1.8+4.0	(1.8+1.8+2.5)+(1.8+1.8+3.0)	(1.8+1.8+3.0)*2
Piping dimension	Gas piping(mm)		∅34.9	∅34.9(∅25.4+∅28.58)	∅34.9(∅28.58*2)
	Liquid piping(mm)		∅15.88	∅19.05(∅12.7*2)	
	Equipoise/Oil equalization piping(mm)		∅9.52		
Noise level(dB(A))			60	61	61

Equivalent HP			22	24	26
Model			AV22NMTAIA	AV24NMTAIA	AV26NMTAIA
Combination mode			AV10+AV12	AV10+AV14	AV10+AV16
Nominal cooling capacity(KW)			61.5	68.0	73.0
Nominal heating capacity(KW)			69.0	76.5	81.5
Heating capacity at low temp.(KW)			53.6	59.4	63.3
Power source			3N~, 380V, 50Hz		
Electrical characteristics	Cooling	Operating/Max. current(A)	35.2/47.7	39.9/54.2	43.2/57.5
		Operating/Max. consumption(kw)	21.4/30.0	24.3/33.0	26.3/35.0
	Heating	Operating/Max. current(A)	34.0/46.0	38.8/51.0	40.4/55.1
		Operating/Max. consumption(kw)	20.7/28.0	23.6/31.0	24.6/33.5
	Power consumption when heating at low temp.(kw)		19.5	22.4	23.3
	Output power of outdoor motor(KW)		0.35+0.30*2	0.35+0.30*2	0.35+0.30*2
Exterior dimensions (mm)			990*750*1700+1390*750*1700		
Weight (Kg)			510	535	535
Exterior colour			ivory		
Compressor model			scroll type		
Compressor quantity			4	5	5
Outdoor airflow (m3/h)			167+200	167+200	167+200
Refrigerant (R22) charge (Kg)			24	26	26
Refrigerant oil	Oil model		SUNISO4GDI-HT		
	Oil amount(L)		(1.8+1.8+3.0)*2	(1.8+1.8+3.0)+(1.8*3+4.0)	(1.8+1.8+3.0)+(1.8*3+4.0)
Piping dimension	Gas piping(mm)		∅38.1(∅28.58+∅31.8)	∅44.4(∅28.58+∅34.9)	
	Liquid piping(mm)		∅19.05(∅12.7+∅15.88)		
	Equipoise/Oil equalization piping(mm)		∅9.52		
Noise level(dB(A))			62	62	62

Equivalent HP			28	30	32
Model			AV28NMTAIA	AV30NMTAIA	AV32NMTAIA
Combination mode			AV12+AV16	AV14+AV16	AV16+AV16
Nominal cooling capacity(KW)			78.5	85.0	90.0
Nominal heating capacity(KW)			87.5	95.0	100.0
Heating capacity at low temp.(KW)			68.3	74.1	78.0
Power source			3N~, 380V, 50Hz		
Electrical characteristics	Cooling	Operating/Max. current(A)	46.2/60.8	50.9/67.3	54.2/70.6
		Operating/Max. consumption(kw)	28.1/38.0	31.0/41.0	33.0/43.0
	Heating	Operating/Max. current(A)	42.8/58.3	47.6/63.3	49.2/67.4
		Operating/Max. consumption(kw)	26.1/35.5	29.0/38.5	30.0/41.1
	Power consumption when heating at low temp.(kw)		24.8	27.7	28.6
	Output power of outdoor motor(KW)		(0.30*2)*2		
Exterior dimensions (mm)			(1390*750*1700)*2		
Weight (Kg)			575	600	600
Exterior colour			ivory		
Compressor model			scroll type		
Compressor quantity			5	6	6
Outdoor airflow (m3/h)			200*2	200*2	167+200*2
Refrigerant (R22) charge (Kg)			30	32	32
Refrigerant oil	Oil model		SUNISO4GDI-HT		
	Oil amount(L)		(1.8+1.8+3.0)+(1.8*3+4.0)	(1.8+1.8+1.8+4.0)*2	
Piping dimension	Gas piping(mm)		∅44.4(∅31.8+∅34.9)	∅44.4(∅34.9*2)	
	Liquid piping(mm)		∅22.22(∅15.88*2)		
	Equipoise/Oil equalization piping(mm)		∅9.52		
Noise level(dB(A))			63	63	63

Equivalent HP			34	36	38
Model			AV34NMTAIA	AV36NMTAIA	AV38NMTAIA
Combination mode			AV10+AV10+AV14	AV10+AV10+AV16	AV10+AV14+AV14
Nominal cooling capacity(KW)			96.0	101.0	106.5
Nominal heating capacity(KW)			108.0	113.0	119.0
Heating capacity at low temp.(KW)			83.7	87.6	92.6
Power source			3N~, 380V, 50Hz		
Electrical characteristics	Cooling	Operating/Max. current(A)	56.0/76.4	59.3/79.7	62.3/83.0
		Operating/Max. consumption(kw)	34.1/46.5	36.1/48.5	37.9/51.5
	Heating	Operating/Max. current(A)	54.6/72.4	56.2/76.5	58.6/79.7
		Operating/Max. consumption(kw)	33.2/44.0	34.2/46.5	35.7/48.5
	Power consumption when heating at low temp.(kw)		31.4	32.3	33.8
	Output power of outdoor motor(KW)		0.35*2+0.30*2		0.35+(0.3*2)*2
Exterior dimensions (mm)			(990*750*1700)*2+1390*750*1700		990*750*1700+(1390*750*1700)*2
Weight (Kg)			770	770	810
Exterior colour			ivory		
Compressor model			scroll type		
Compressor quantity			7	7	7
Outdoor airflow (m3/h)			167+200*2	167+200*2	167+200*2
Refrigerant (R22) charge (Kg)			36	36	40
Refrigerant oil	Oil model		SUNISO4GDI-HT		
	Oil amount(L)		(1.8+1.8+3.0)*2+(1.8*3+4.0)		(1.8+1.8+1.8+4.0)*3
Piping dimension	Gas piping(mm)		∅50.8(∅28.58*2+∅34.9)		∅50.8(∅28.58+∅31.8+∅34.9)
	Liquid piping(mm)		∅22.22(∅12.7*2+∅15.88)		∅22.22(∅12.7+∅15.88*2)
	Equipoise/Oil equalization piping(mm)		∅9.52		
Noise level(dB(A))			63	63	63

Equivalent HP			40	42
Model			AV40NMTAIA	AV42NMTAIA
Combination mode			AV10+AV14+AV16	AV10+AV16+AV16
Nominal cooling capacity(KW)			113.0	118.0
Nominal heating capacity(KW)			126.5	131.5
Heating capacity at low temp.(KW)			98.4	102.3
Power source			3N~, 380V, 50Hz	
Electrical characteristics	Cooling	Operating/Max. current(A)	67/89.5	70.3/92.8
		Operating/Max. consumption(kw)	40.8/54.5	42.8/56.5
	Heating	Operating/Max. current(A)	63.4/84.7	65.0/88.8
		Operating/Max. consumption(kw)	38.6/51.5	39.6/54.0
	Power consumption when heating at low temp.(kw)		36.7	37.6
	Output power of outdoor motor(KW)		0.35+(0.30*2)*2	
Exterior dimensions (mm)			990*750*1700+(1390*750*1700)*2	
Weight (Kg)			835	835
Exterior colour			ivory	
Compressor model			scroll type	
Compressor quantity			8	8
Outdoor airflow (m3/h)			167+200*2	167+200*2
Refrigerant (R22) charge (Kg)			42	42
Refrigerant oil	Oil model		SUNISO4GDI-HT	
	Oil amount(L)		(1.8+1.8+1.8+4.0)*3	
Piping dimension	Gas piping(mm)		∅50.8(∅31.8+∅34.9*2)	
	Liquid piping(mm)		∅22.22(∅12.7+∅15.88*2)	∅25.4(∅15.88*3)
	Equipoise/Oil equalization piping(mm)		∅9.52	
Noise level(dB(A))			63	64

Equivalent HP		44	46	48
Model		AV44NMTAIA	AV46NMTAIA	AV48NMTAIA
Combination mode		AV12+AV16+AV16	AV14+AV16+AV16	AV16+AV16+AV16
Nominal cooling capacity(KW)		123.5	130.0	135.0
Nominal heating capacity(KW)		137.5	145.0	150.0
Heating capacity at low temp.(KW)		107.3	113.1	117.0
Power source		3N~, 380V, 50Hz		
Electrical characteristics	Cooling: Operating/Max. current(A)	73.3/96.1	78.0/102.6	81.3/105.9
	Cooling: Operating/Max. consumption(kw)	44.6/59.5	47.5/62.5	49.5/64.5
	Heating: Operating/Max. current(A)	67.4/92.0	72.2/97.0	73.8/101.1
	Heating: Operating/Max. consumption(kw)	41.1/56.0	44.0/59.0	45.0/61.5
	Power consumption when heating at low temp.(kw)	39.1	42	42.9
	Output power of outdoor motor(KW)	(0.3*2)*3		
Exterior dimensions (mm)		(1390*750*1700)*3		
Weight (Kg)		875	900	900
Exterior colour		ivory		
Compressor model		scroll type		
Compressor quantity		8	9	9
Outdoor airflow (m3/h)		200*3	200*3	200*3
Refrigerant (R22) charge (Kg)		46	48	48
Refrigerant oil	Oil model	SUNISO4GDI-HT		
	Oil amount(L)	(1.8+1.8+1.8+4.0)*3		
Piping dimension	Gas piping(mm)	∅50.8(∅31.8+∅34.9*2)	∅54.1(∅34.9*3)	
	Liquid piping(mm)	∅25.4(∅15.88*3)		
	Equipoise/Oil equalization piping(mm)	∅9.52		
Noise level(dB(A))		64	64	64

Outdoor pipe connection method: the gas pipe should be welded, and the liquid pipe and the oil pipe should be flared.

(2) Indoor unit

A. Low static pressure duct type

Model		AD072ML AIA	AD092ML AIA	AD122ML AIA	AD142ML AIA	AD162ML AIA	AD182ML AIA	AD242ML AIA
Nominal cooling capacity(KW)		2.2	2.8	3.6	4.0	4.5	5.6	7.1
Nominal heating capacity(KW)		2.5	3.2	4.0	4.5	5.0	6.3	8.0
Electrical heating power(KW) /Current(A)		0.8/3.6	0.8/3.6	0.8/3.6	1.5/7.0	1.5/7.0	1.5/7.0	1.5/7.0
Heating capacity at low temp.(KW)		2.0	2.5	3.2	3.5	4.0	5.0	6.3
Electrical characteristics	Power source	1PH, 220V~, 50Hz						
	Operating current(A)	0.25	0.25	0.25	0.27	0.27	0.27	0.55
	Power consumption(KW)	0.045	0.045	0.045	0.05	0.05	0.05	0.11
Fan characteristics	Fan type and quantity	centrifugal*1			centrifugal*2			
	Motor output(kW)	0.03	0.03	0.03	0.04	0.04	0.04	0.1
	Standard airflow(m^3/h)	500	500	500	850	850	850	1250
	Standard static pressure(Pa)	0						
	Max. static pressure(Pa)	30						
Exterior dimensions(mm)		610*483.5*220	610*483.5*220	610*483.5*220	1105*483.5*220	1105*483.5*220	1105*483.5*220	1105*483.5*220
Air outlet dimensions(mm)		418*131	418*131	418*131	880*131	880*131	880*131	880*131
Air return dimensions(mm)		480*218	480*218	480*218	1064*218	1064*218	1064*218	1064*218
Weight(Kg)		13/15	13/15	14/16	25/27	25/27	25/27	28/30
Expansion mode		Electronic expansion valve						
Controller		Wired controller/ wireless controller (optional)						
Piping dimension	Gas piping(mm)	∅12.7	∅12.7	∅12.7	∅12.7	∅12.7	∅15.88	∅15.88
	Liquid piping(mm)	∅6.35	∅6.35	∅6.35	∅6.35	∅6.35	∅9.52	∅9.52
	Drain hose(mm)	∅24	∅24	∅24	∅24	∅24	∅24	∅24
	Pipe connection	flared						
Noise level(dB(A)) H/M/L		35/32/30	35/32/30	35/32/30	35/32/30	35/32/30	36/33/31	39/37/35

B. 4-way cassette type

Model		AB072MCAHA	AB092MCAHA	AB122MCAHA	AB142MCAHA	AB162MCAHA
Nominal cooling capacity(KW)		2.2	2.8	3.6	4.0	4.5
Nominal heating capacity(KW)		2.5	3.2	4.0	4.5	5.0
Electrical heating power(KW) /Current(A)		---	---	---	---	---
Heating capacity at low temp.(KW)		2.0	2.5	3.2	3.5	4.0
Electrical characteristics	Power source	1PH, 220V~, 50Hz				
	Operating current(A)	0.47				
	Power consumption(KW)	0.08				
Fan characteristics	Fan type and quantity	centrifugal*1				
	Motor output(kW)	0.03	0.04			
	Standard airflow(m^3/h)	700				
	Standard static pressure(Pa)	0				
	Max. static pressure(Pa)	------				
Exterior dimensions(mm)		660*570*260				
Panel exterior dimensions(mm)		700*700*60				
Weight(Kg)		19+2.8/21+4.8				
Expansion mode		Electronic expansion valve				
Controller		Wired controller(optional)/wireless controller (standard)				
Piping dimension	Gas piping(mm)	∅12.7	∅12.7	∅12.7	∅12.7	∅12.7
	Liquid piping(mm)	∅6.35	∅6.35	∅6.35	∅6.35	∅6.35
	Drain hose(mm)	∅ 32	∅ 32	∅ 32	∅ 32	∅ 32
	Pipe connection	flared	flared	flared	flared	flared
Noise level(dB(A)) H/M/L		32/30/29	32/30/29	32/30/29	33/30/29	33/30/29

Model		AB182MC AIA	AB242M CAIA	AB282MC AIA	AB322MC AIA	AB382MC AIA	AB482MC AIA
Nominal cooling capacity(KW)		5.6	7.1	8.0	9.0	11.2	14.0
Nominal heating capacity(KW)		6.3	8.0	9.0	10.0	12.5	16.0
Electrical heating power(KW) /Current(A)		2.1/9.55			2.7/12.3		
Heating capacity at low temp.(KW)		5.0	6.3	7.1	8.0	10.0	12.5
Electrical characteristics	Power source	1PH, 220V~, 50Hz					
	Operating current(A)	0.51	0.51	0.51	0.76	0.76	0.76
	Power consumption(KW)	0.1	0.1	0.1	0.15	0.15	0.15
Fan characteristics	Fan type and quantity	centrifugal*1					
	Motor output(kW)	0.04			0.14		
	Standard airflow(m^3/h)	1020			1800		
	Standard static pressure(Pa)	0					
	Max. static pressure(Pa)	------					
Exterior dimensions(mm)		840*840*240			840*840*295		
Panel exterior dimensions(mm)		950*950*80					
Weight(Kg)		36(30+6)			44(38+6)		
Controller		Wired controller(optional)/wireless controller (standard)					
Piping dimension	Gas piping(mm)	∅15.88	∅15.88	∅15.88	∅15.88	∅19.05	∅19.05
	Liquid piping(mm)	∅9.52					
	Drain hose(mm)	∅32					
	Connecting method	Flared joint					
Noise level(dB(A)) H/M/L		34/32/30	35/34/31	37/35/31			42/39/35

C. Wall mounted type

Model		AS072MCAHA	AS092MCAHA	AS122MCAHA	AS142MCAHA	AS162MCAHA	AS182MCAHA
Nominal cooling capacity(KW)		2.2	2.8	3.6	4.0	4.5	5.6
Nominal heating capacity(KW)		2.5	3.2	4.0	4.5	5.0	6.3
Heating capacity at low temp.(KW)		2.0	2.5	3.2	3.5	4.0	5.0
Electrical characteristics	Power source	1PH, 220V~, 50Hz					
	Operating current(A)	0.2				0.25	
	Power consumption(KW)	0.04				0.05	
Fan characteristics	Fan type and quantity	cross flow*1					
	Motor output(kW)	0.025		0.025		0.03	
	Standard airflow(m^3/h)	600		630		760	
	Standard static pressure(Pa)	0					
	Max. static pressure(Pa)	------					
Exterior dimensions(mm)		795*197*265				928*197*265	
Air outlet dimensions(mm)		600*85				850*85	
Weight(Kg)		10				13	
Controller		Wired controller(optional)/wireless controller (standard)					
Piping dimension	Gas piping(mm)	∅ 12.7				∅ 15.88	
	Liquid piping(mm)	∅ 6.35				∅ 9.52	
	Drain hose(mm)	∅ 16.5					
	Connecting method	Flared joint + brazing					
Noise level(dB(A)) H/M/L		34/30/29		35/32/29		38/36/32	

D. Middle static pressure duct type

Model		AD322MMAHA	AD382MMAHA	AD482MMAHA
Nominal cooling capacity(KW)		9.0	11.2	14.0
Nominal heating capacity(KW)		10.0	12.5	16.0
Electrical heating power(KW) /Current(A)		2.4/10.91	2.4/10.91	2.4/10.91
Heating capacity at low temp.(KW)		8.0	10.0	12.5
Electrical characteristics	Power source	1PH, 220V, 50Hz		
	Operating current(A)	1.0		
	Power consumption(KW)	0.2		
Fan characteristics	Fan type and quantity	centrifugal*3		
	Motor output(kW)	0.15(0.1+0.05)	0.15(0.1+0.05)	0.15(0.1+0.05)
	Standard airflow(m^3/h)	1900	1900	2100
	Standard static pressure(Pa)	50		
	Max. static pressure(Pa)	96		
Exterior dimensions(mm)		1410*645*350		
Air outlet dimensions(mm)		∅200*4		
Weight(Kg)		55/57		
Controller		Wired controller/ wireless controller (optional)		
Accessories		Use for installation		
Piping dimension	Gas piping(mm)	∅ 15.88	∅ 19.05	∅ 19.05
	Liquid piping(mm)	∅ 9.52		
	Drain hose(mm)	∅ 32		
	Connecting method	flared		
Noise level(dB(A)) H/M/L		43/37/35		44/40/36

D. High static pressure duct type

Model		AD182MHAHA	AD242MHAHA	AD282MHAHA
Nominal cooling capacity(KW)		5.6	7.1	8
Nominal heating capacity(KW)		6.3	8	9
Electrical heating power(KW) /Current(A)		2.6/11.9	2.6/11.9	2.6/11.9
Heating capacity at low temp.(KW)		5.0	6.3	7.1
Electrical characteristics	Power source	1PH, 220~230V, 50Hz		
	Operating current(A)	1.4	1.4	1.4
	Power consumption(KW)	0.28	0.28	0.28
Fan characteristics	Fan type and Qty	centrifugal*2	centrifugal*2	centrifugal*2
	Fan motor output(KW)	0.23	0.23	0.23
	Standard airflow(m^3/h)	900~1500	900~1500	900~1500
	Standard static pressure(Pa)	100	100	100
	Max. static pressure(Pa)	196	196	196
Exterior dimensions(mm)		970*875*360	970*875*360	970*875*360
Air outlet dimensions(mm)		600*250	600*250	600*250
Weight(net/gross, Kg)		48/56	48/56	48/56
Controller		Wired controller/ wireless controller (optional)		
Accessories		Use for installation		
Piping dimension	Gas piping(mm)	∅ 15.88	∅ 15.88	∅ 15.88
	Liquid piping(mm)	∅ 9.52	∅ 9.52	∅ 9.52
	Drain hose(mm)	∅ 32	∅ 32	∅ 32
	Connecting method	flared	flared	flared
Noise level(dB(A)) H/L		42/40	42/40	42/40

Model		AD302MHAHA	AD382MHAHA	AD482MHAHA
Nominal cooling capacity(KW)		9.0	11.2	14.0
Nominal heating capacity(KW)		10.0	12.5	16.0
Electrical heating power(KW) /Current(A)		----	----	----
Heating capacity at low temp.(KW)		8.0	10.0	12.5
Electrical characteristics	Power source	1PH, 220~230V, 50Hz		
	Operating current(A)	1.5	1.6	1.8
	Power consumption(KW)	0.3	0.32	0.36
Fan characteristics	Fan type and Qty	centrifugal*2	centrifugal*2	centrifugal*2
	Fan motor output(KW)	0.27	0.27	0.27
	Standard airflow(m^3/h)	1560	1600	2100
	Standard static pressure(Pa)	100	100	100
	Max. static pressure(Pa)	196	196	196
Exterior dimensions(mm)		1350*875*360	1350*875*360	1350*875*360
Air outlet dimensions(mm)		850*250	850*250	850*250
Weight(net/gross, Kg)		62/77	62/77	62/77
Controller		Wired controller/ wireless controller (optional)		
Accessories		Use for installation		
Piping dimension	Gas piping(mm)	∅ 15.88	∅ 19.05	∅19.05
	Liquid piping(mm)	∅ 9.52	∅ 9.52	∅ 9.52
	Drain hose(mm)	∅ 32	∅32	∅32
	Connecting method	flared	flared	flared
Noise level(dB(A)) H/L		45/40	45/40	45/40

Convertible type

Model		AC092MCAHA	AC122MCAHA	AC162MCAHA	AC182MCAHA
Nominal cooling capacity(KW)		2.8	3.6	4.5	5.6
Nominal heating capacity(KW)		3.2	4.0	5	6.3
Electrical heating power(KW) /Current(A)		/	/	/	/
Heating capacity at low temp.(KW)		4	4	4	5
Electrical characteristics	Power source	1PH, 220V, 50Hz			
	Operating current(A)	0.3	0.3	0.3	0.3
	Power consumption(KW)	0.06	0.06	0.06	0.06
Fan characteristics	Fan type and Qty	centrifugal*2	centrifugal*2	centrifugal*2	centrifugal*2
	Fan motor output(KW)	0.05	0.05	0.05	0.05
	Standard airflow(m^3/h)	750	750	750	750
	Standard static pressure(Pa)	/			
	Max. static pressure(Pa)	/			
Exterior dimensions(mm)		990*655*199	990*655*199	990*655*199	990*655*199
Air outlet dimensions(mm)		--	--	--	--
Weight(Kg)		28.3/34.3	28.3/34.3	28.3/34.3	28.3/34.3
Controller		Wired controller(standard)/ wireless controller (optional)			
Accessories		Use for installation			
Piping dimension	Gas piping(mm)	∅ 12.7			∅ 15.88
	Liquid piping(mm)	∅ 6.35			∅ 9.52
	Drain hose(mm)	∅ 20			∅ 20
	Connecting method	flared			
Noise level(dB(A)) H/M/L		48/46/44	48/46/44	48/46/44	48/46/44

Model		AC242MCAHA	AC382MFAHA	AC482MFAHA
Nominal cooling capacity(KW)		7.1	11.2	14
Nominal heating capacity(KW)		8	12.5	16
Electrical heating power(KW) /Current(A)		/	/	/
Heating capacity at low temp.(KW)		6.3	8	10
Electrical characteristics	Power source	1PH, 220V, 50Hz		
	Operating current(A)	0.5	0.5	0.5
	Power consumption(KW)	0.1	0.1	0.1
Fan characteristics	Fan type and Qty	centrifugal*2	centrifugal*4	centrifugal*4
	Fan motor output(KW)	0.09	0.09	0.09
	Standard airflow(m^3/h)	800	1500	1800
	Standard static pressure(Pa)	/		
	Max. static pressure(Pa)	/		
Exterior dimensions(mm)		990*655*199	1580*700*240	1580*700*240
Air outlet dimensions(mm)		--	--	--
Weight(Kg)		28.3/34.3	54/61	54/61
Controller		Wired controller/ wireless controller (optional)		
Accessories		Use for installation		
Piping dimension	Gas piping(mm)	∅ 15.88	∅ 19.05	
	Liquid piping(mm)	∅ 9.52	∅ 9.52	
	Drain hose(mm)	∅ 20	∅ 25	
	Connecting method	flared	flared	
Noise level(dB(A)) H/M/L		48/46/44	53/51/49	53/51/49

Note: Testing conditions

	indoor	indoor
nominal cooling capacity	27°CDB, 19 CWB	35 CDB, 24°CWB
nominal heating capacity	20°CDB	7°CDB, 6°CWB
heating capacity at low temperature	20°CDB	2°CDB, 1°CWB

2.1.7 Optional accessories list

Name	Model	Units	Remark
Gather pipe assembly	HZG-22C	AV18,20,22NMTAIA	
	HZG-32C	AV20,22,24,26,28,30,32NMTAIA	
	HZG-38C	AV34,36,38NMTAIA	
	HZG-48C	AV40,42,44,46,48NMTAIA	
Branch pipe assembly	FQG-B335	-------	
	FQG-B680	-------	
	FQG-B960	-------	
	FQG-B1350	All indoor units	
Standard wired controller	YR-E12	duct unit	
	YR-H71	wall mounted unit	With the remote receiver
Remote controller	YR-H71	cassette unit	The remote receiver is in the panel or the front panel
Group controller	YR-E12	All indoor units	Max. 16 (Group) indoor units
Central controller	ICR01	All indoor units	Max. 64 (Group) indoor units
Connection board	IGU04	All indoor units	Used with the ICR01 assembly(1: 64), can be installed in the electrical box of master unit

2.4 Performance curves

2.4.1 Running range

(Cooling)

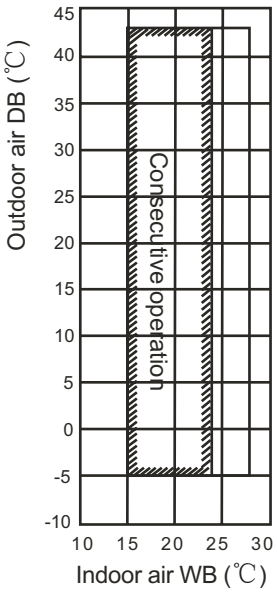

(Heating)

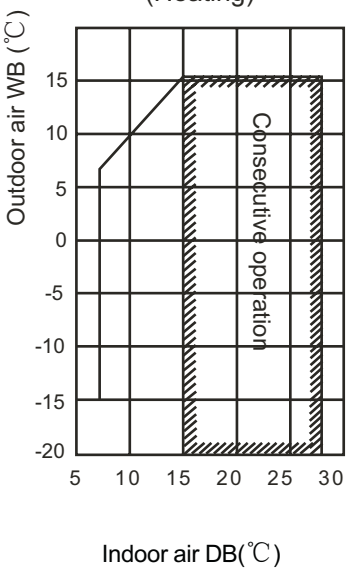

2.4.2 Calculation method

(1) Calculation method of refrigerating capacity---Refrigerating capacity to be known =Refrigerating capacity x (A x B x C x D x E) W

A. Capacity compensation value of indoor air wet-bulb temperature condition

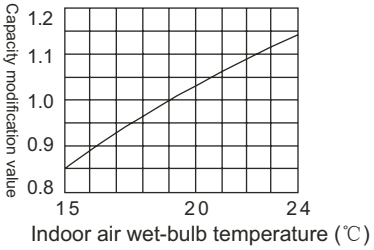

B. Capacity compensation value of outdoor air dry-bulb temperature condition

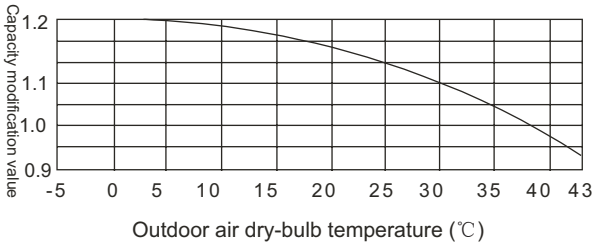

C. Capacity modification value under airflow variation rate of indoor unit group (only for duct unit)

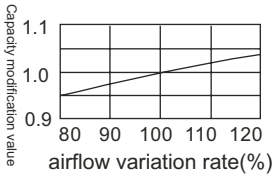

D. Capacity compensation suitable for total capability of indoor unit group (cooling)

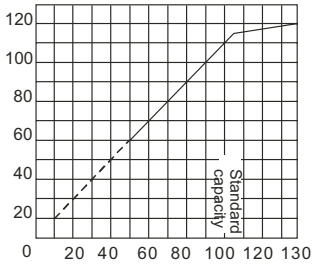

E: Capacity correction factor at long piping and high drop

8HP, 12HP, 14HP, 22HP, 24HP, 28HP, 30HP, 38HP, 40HP:

Capacity correction factor in cooling mode:

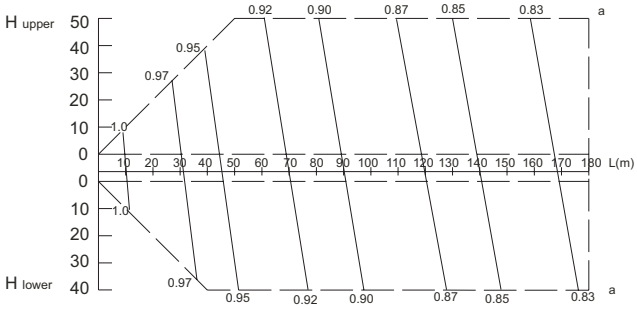

10HP, 16HP, 18HP,34HP, 44HP, 46HP:

Capacity correction factor in cooling mode:

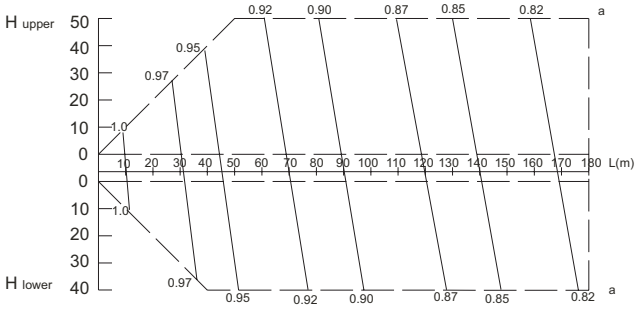

20HP, 26HP, 32HP,38HP, 42HP, 48HP:

Capacity correction factor in cooling mode:

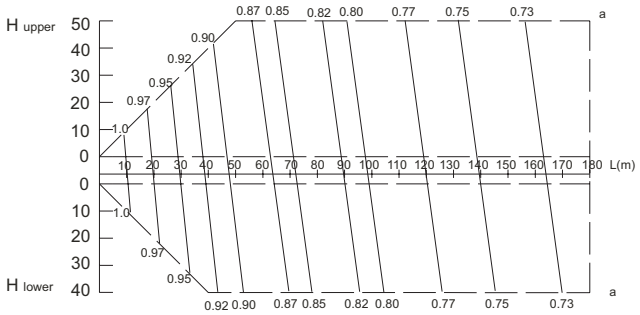

Hupper: high drop when outdoor is upper; indoor is lower
Hlower: high drop when outdoor is lower; indoor is upper
L: equivalent pipe length
a: capacity correction factor

Note:
1. When the single equivalent pipe length is over 90m, please enlarge the gas pipe diameter of the main pipe.
2. Gas pipe diameter of main pipe after being enlarged:

horse power	model	pipe size		
		gas pipe	enlarged gas pipe	liquid pipe
8HP	AV08NMTAIA	Ø 25.4	Ø 28.58	Ø12.7
10HP	AV10NMTAIA	Ø 28.58	Ø 31.8	
12HP	AV12NMTAIA	Ø 31.8	Ø 34.9	Ø15.88
14HP	AV14NMTAIA	Ø 34.9	---	
16HP	AV16NMTAIA	Ø 34.9	---	

Only 8HP, 10HP and 12HP use the enlarged gas pipe, and the others need not.
3. The total equivalent pipe length after the gas pipe of main pipe has been enlarged:
Total equivalent pipe length=main pipe equivalent length*0.5+branch pipe equivalent pipe length

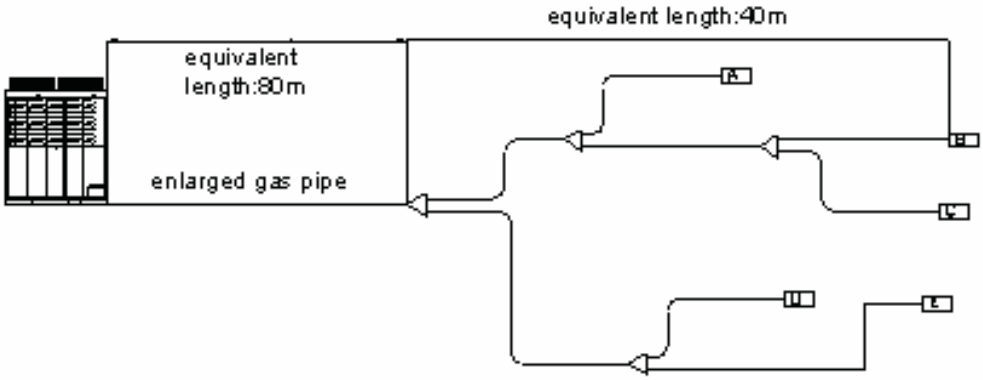

Total equivalent pipe length=80*0.5+40=80

(2) Calculation method of heating capacity---Heating capacity to be known
= Heating capacityx (A x B x C x D x E x F) W

A. Capacity modification under indoor air dry-bulb temperature condition

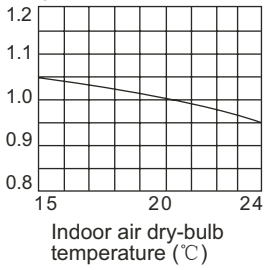

B. Capacity modification under outdoor air wet-bulb temperature condition

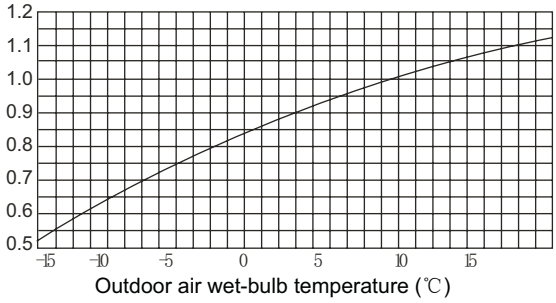

C. Capacity modification value under airflow variation rate of indoor unit group

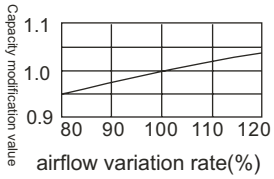

D. Capacity compensation suitable for total capability of indoor unit group (heating)

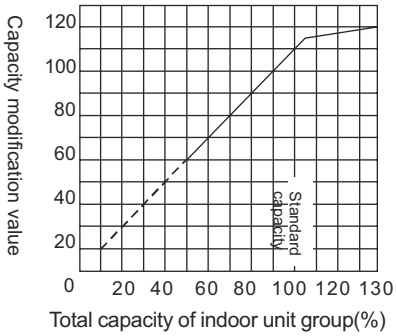

E. Capacity compensation value for defrost capability of outdoor heat exchanger

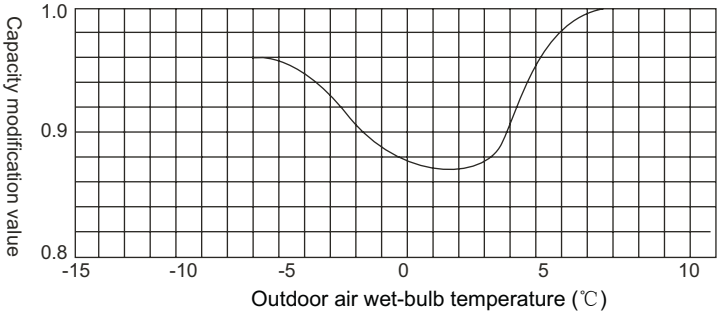

F: Capacity correction factor at long piping and high drop

8HP, 12HP, 14HP, 22HP, 24HP, 28HP, 30HP, 38HP, 40HP:

Capacity correction factor in heating mode:

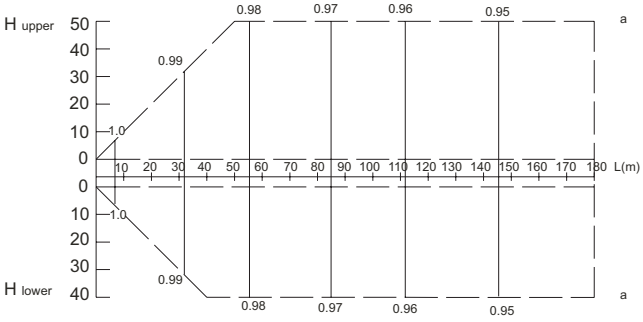

10HP, 16HP, 18HP,34HP, 44HP, 46HP:
Capacity correction factor in heating mode:

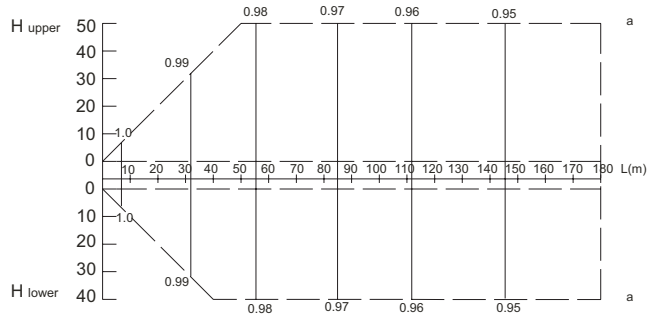

20HP, 26HP, 32HP,38HP, 42HP, 48HP:
Capacity correction factor in heating mode:

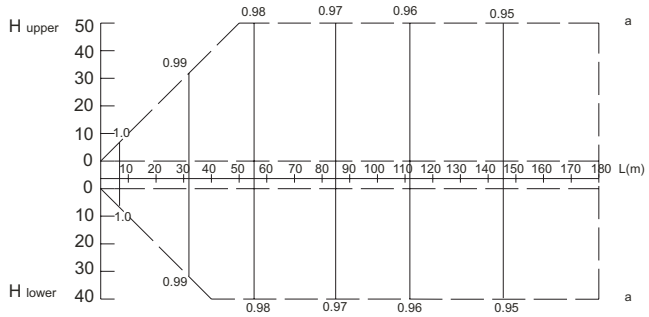

Hupper: high drop when outdoor is upper; indoor is lower
Hlower: high drop when outdoor is lower; indoor is upper
L: equivalent pipe length
a: capacity correction factor

(3) Calculation method of refrigerating capacity---Only one indoor unit running

$$\text{Outdoor modified capacity with a single indoor running} = \text{outdoor modified capacity} * \frac{\text{standby indoor nominal capacity}}{\text{Indoor total nominal capacity}}$$

(Outdoor modified capacity: heating or cooling capacity after modify item 1 and 2)

2.5 Noise level

2.5.1 Outdoor running noise:

(1) Testing illustrate:

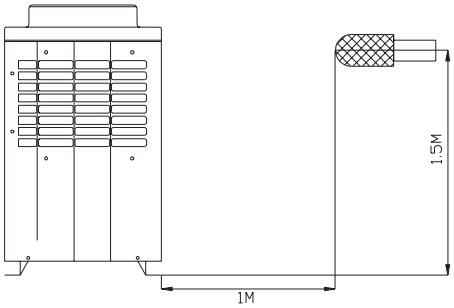

(2) Testing condition:

a. Unit running in the nominal condition
b. Test in the semi-anechoic chamber
c. Noise level varies from the actual factors such as room structure, etc.

(3) Noise level dB(A):

Air speed	Outdoor unit group(380V, 50HZ)								
	8HP	10HP	12HP	14HP	16HP	18/20HP	22-26HP	28-40HP	42-48HP
H	57	58	60	60	60	61	62	63	64

(4) Octave band level

AV08NMTAIA

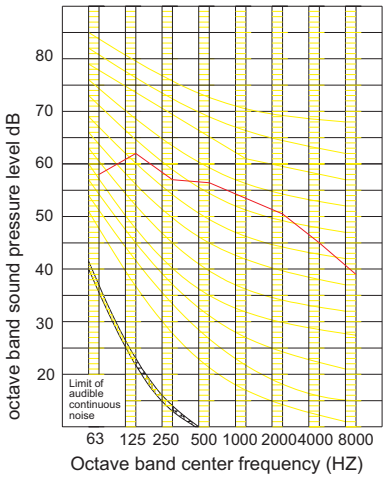

AV10NMTAIA

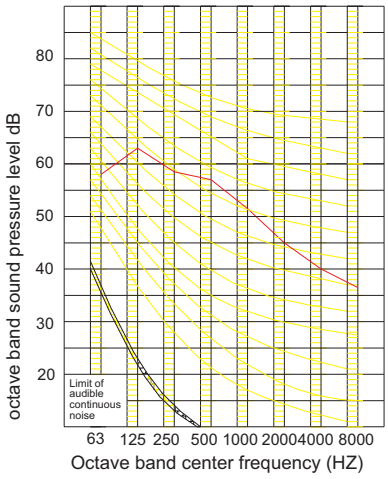

AV12NMTAIA

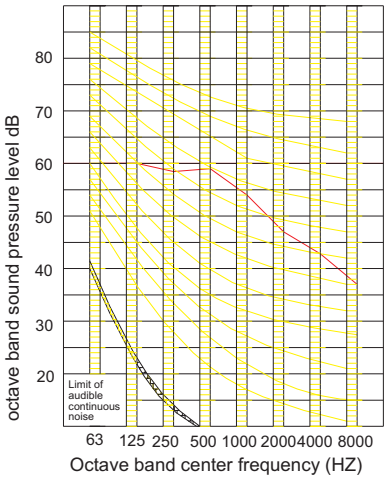

AV14/16NMTAIA

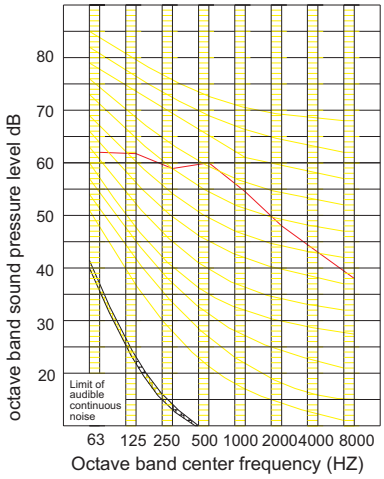

2.5.2 Ceiling concealed type running noise:

(1) Testing illustrate:

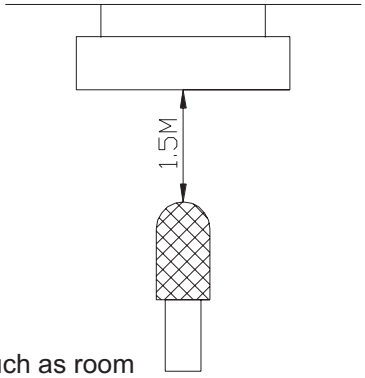

(2) Testing condition:

a. Unit running in the nominal condition
b. Test in the semi-anechoic chamber
c. Noise level varies from the actual factors such as room structure, etc.

(3) Noise level dB(A):

Air speed	Ceiling concealed duct type (220V, 50HZ)										
	07	09	12	14	16	18	24	28	32	38	48
H	35					36	39		43		
M	32					33	37		41		
L	30					31	35		39		

(4) Octave band level

AD072-162MLAIA

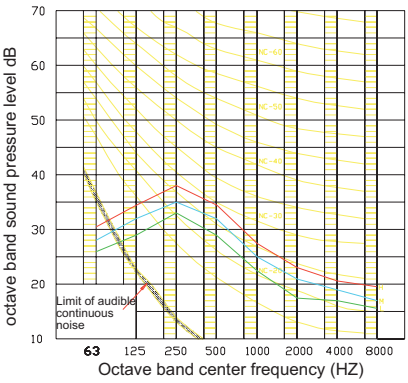

AD182MLAIA

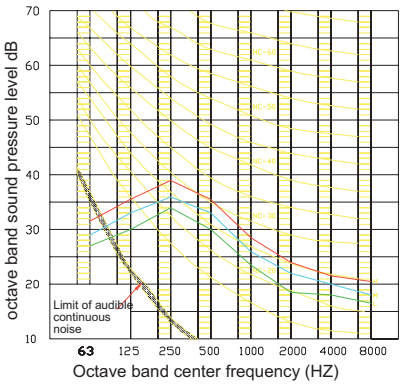

AD242-28MLAIA

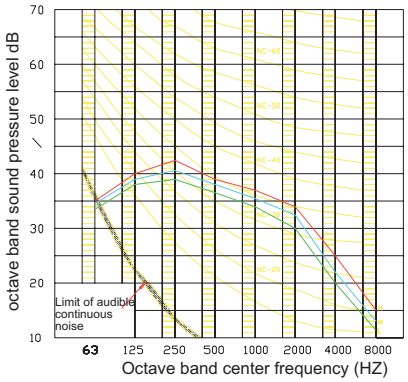

AD322-48MLAIA

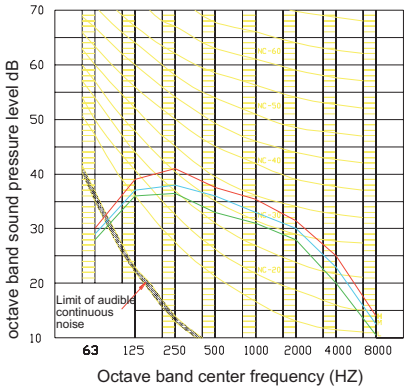

2.5.3 4-way cassette type running noise:

(1) Testing illustrate:

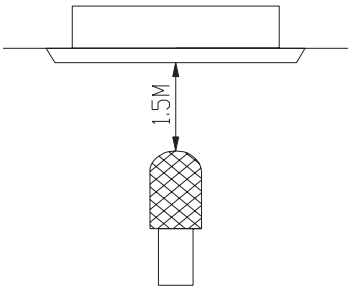

(2) Testing condition:

a. Unit running in the nominal condition
b. Test in the semi-anechoic chamber
c. Noise level varies from the actual factors such as room structure, etc.

(3) Noise level dB(A):

Air speed	4-way cassette type (220V, 50HZ)										
	22(0.8)	28(1.0)	36(1.25)	40(1.5)	45(1.7)	56(2.0)	71(2.5)	80(3.0)	90(3.2)	112(4.0)	140(5.0)
H	32			33		34	35	37			42
M	30			30		32	34	35			39
L	29			29		30	31	31			35

(4) Octave band level

AB072-122MCAHA

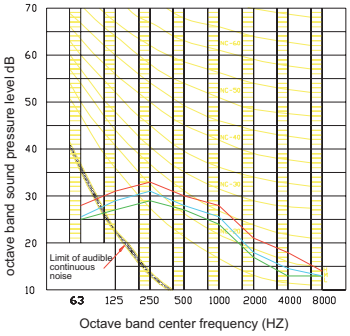

AB142-162MCAHA

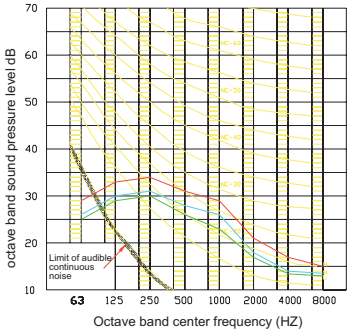

AB182MCAHA

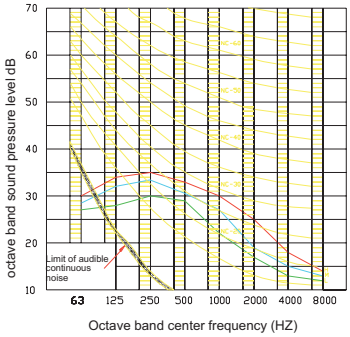

AB242MCAHA

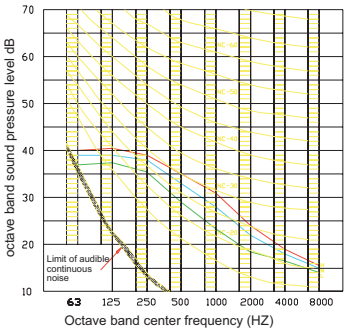

AB282-382MCAHA

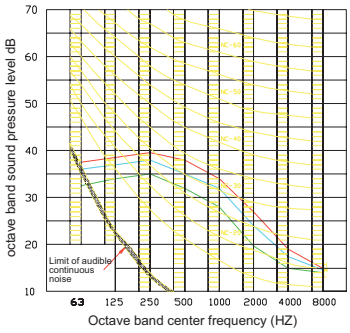

AB482MCAHA

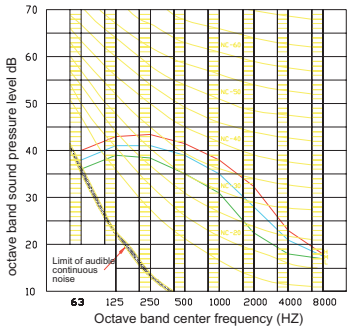

2.5.4 Wall mounted type running noise:

(1) Testing illustrate:

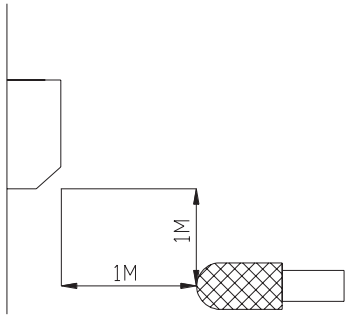

(2) Testing condition:

a. Unit running in the nominal condition
b. Test in the semi-anechoic chamber
c. Noise level varies from the actual factors such as room structure, etc.

(3) Noise level dB(A):

Air speed	Wall mounted type (220V,50HZ)					
	22(0.8)	28(1.0)	36(1.25)	40(1.5)	45(1.7)	56(2.0)
H	34		35		38	
M	30		32		36	
L	29		29		32	

(4) Octave band level

AS072-092MCAHA

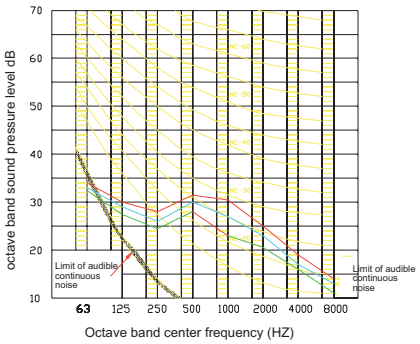

AS122-142MCAHA

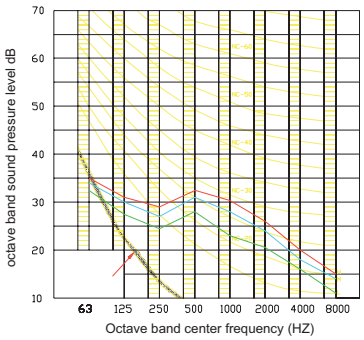

AS162-182MCAHA

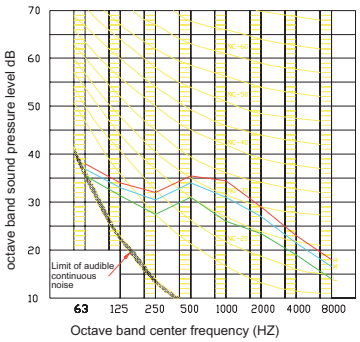

2.5.5 Middle static pressure duct type running noise:

(1) Testing illustrate:

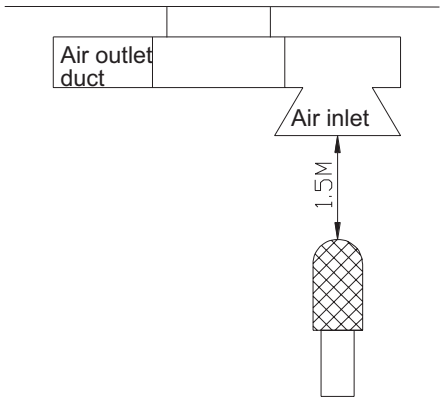

(2) Testing condition:

a. Unit running in the nominal condition
b. Test in the semi-anechoic chamber
c. Noise level varies from the actual factors such as room structure, etc.

(3) Noise level dB(A):

Air speed	Middle static pressure duct type (220V, 50HZ)		
	90(3.2)	112(4.0)	140(5.0)
H	43	43	44
M	37	37	40
L	35	35	36

(4) Octave band level

AD322-382MMAHA

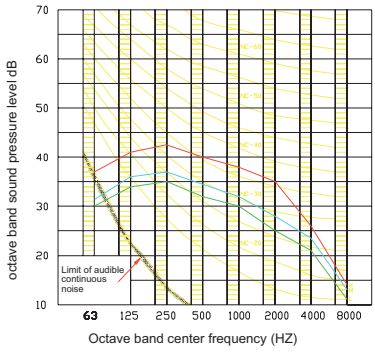

AD482MMAHA

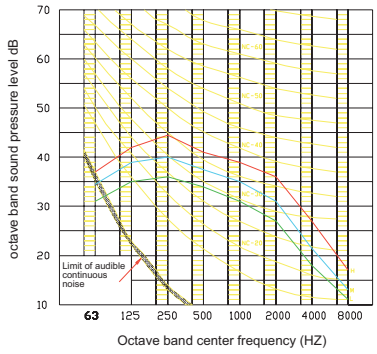

2.5.6 High static pressure duct type running noise:

(1) Testing illustrate:

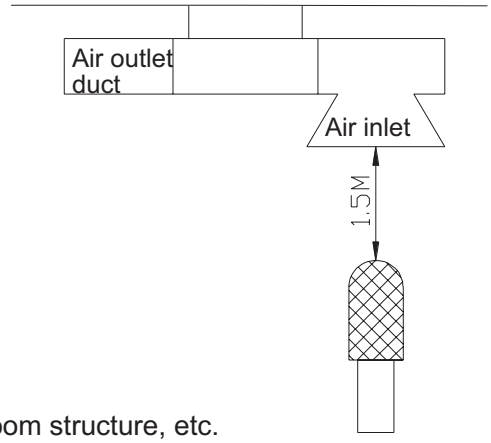

(2) Testing condition:

a. Unit running in the nominal condition
b. Test in the semi-anechoic chamber
c. Noise level varies from the actual factors such as room structure, etc.

(3) Octave band level

AD182~282MHAHA

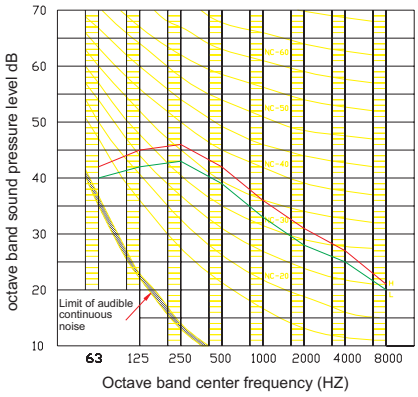

AD302MHAHA

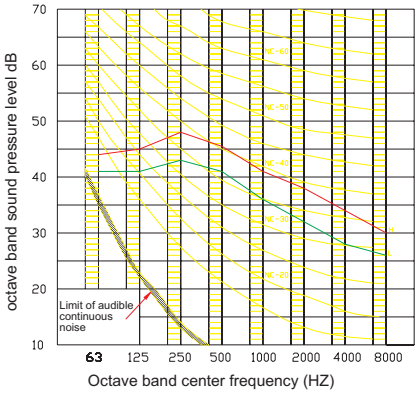

AD382MHAHA

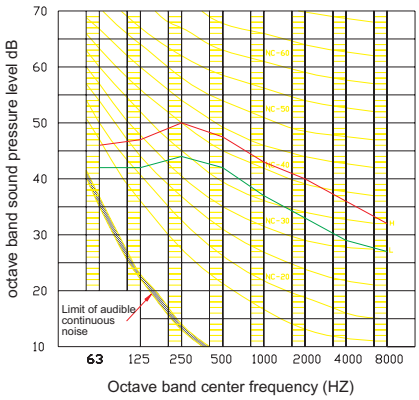

AD482MHAHA

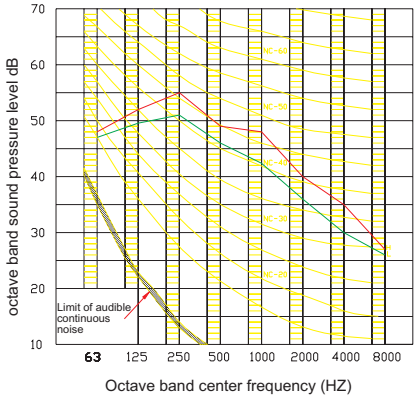

2.5.7 Convertible type running noise:

(1) Testing illustrate:

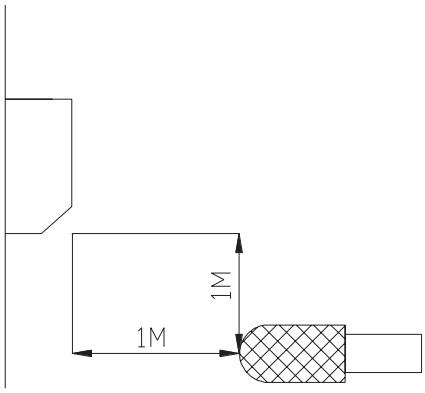

(2) Testing condition:

a. Unit running in the nominal condition
b. Test in the semi-anechoic chamber
c. Noise level varies from the actual factors such as room structure, etc.

(3) Octave band level

AC162~242MCAHA

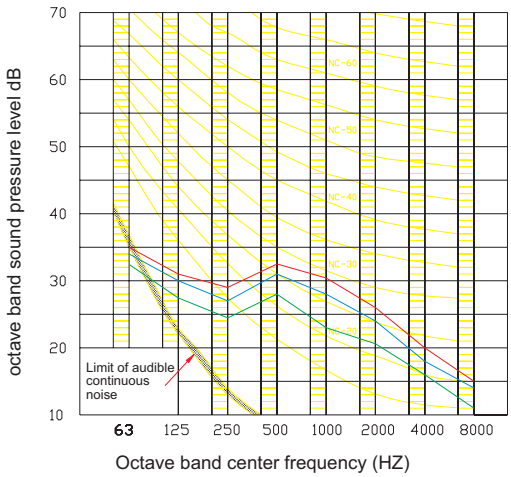

AC382~482MFAHA

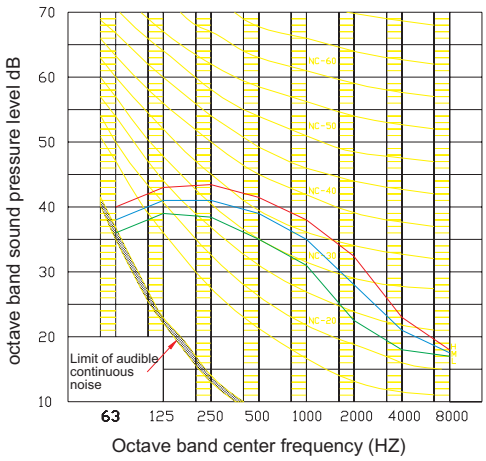

Installation instruction

3.1 Outdoor installation

3.2 Indoor installation

3.3 Circuit diagram

3.4 Electric installation

3.1 Outdoor installation

SAFETY PRECAUTIONS

Please read these "Safety Precautions" first then accurately execute the installation work.

Though the precautionary points indicated herein are divided under two headings, "WARNING" and "CAUTION", those points which are related to the strong possibility of an installation done in error resulting in death or serious injury are listed in the "WARNING" section. However, there is also a possibility of serious consequences in relationship to the points listed in the "CAUTION" section as well. In either case, important safety related information is indicated, so by all means, properly observe all that is mentioned.

After completing the installation, along with confirming that no abnormalities were seen from the operation tests, please explain operating methods as well as maintenance methods to the user (customer) of this equipment, based on the owner's manual.

Moreover, ask the customer to keep this sheet together with the owner's manual.

WARNING

This system should be applied to places of office, restaurant, residence and the like. Appliaction to inferior environment such as engineering shop could cause equipment malfunction.

Please entrust installation to either the company which sold you the equipment or to a professional contractor. Defects from improper installations can be the cause of water leakage, lectric shocks and fires.

Execute the installation accurately, based on following the installation manual. Again, improper installations can result in water leakage, electric shocks and fires.

When a large air-conditioning system is installed to a small room, it is necessary to have a prior planned countermeasure for the rare case of a refrigerant leakage, to prevent the exceeding of threshold concentration. In regards to preparing this countermeasure, consult with the company from which you purchased the equipment, and make the installation accordingly. In the rare event that a refrigerant leakage and exceeding of threshold concentration does occur,there is the danger of a resultant oxygen deficiency accident.

For installation, confirm that the installation site can sufficiently support heavy weight. When strength is insufficient, injury can result from a falling of the unit.

Execute the prescribed installation construction to prepare for earthquakes and the strong winds of typhoons and hurricanes, etc. Improper installations can result in accidents due to a violent falling over of the unit.

For electrical work, please see that a licensed electrician executes the work while following the safety standards related to electrical equipment, and local regulations as well as the installation instructions, and that only exclusive use circuits are used. Insufficient power source circuit capacity and defective installment execution can be the cause of electric shocks and fires.

Accurately connect wiring using the proper cable, and insure that the external force of the cable is not conducted to the terminal connection part, through properly securing it. Improper connection or securing can result in heat generation or fire.

Take care that wiring does not rise upward, and accurately install the lid/service panel. Its improper installation can also result in heat generation or fire.

When setting up or moving the location of the air conditioner, do not mix air etc. or anything other than the designated refrigerant (please see nameplate) within the refrigeration cycle.

Rupture and injury caused by abnormal high pressure can result from such mixing.

Always use accessory parts and authorized parts for installation construction. Using parts not authorized by this company can result in water leakage, electric shock, fire and refigerant leakage.

CAUTION

Execute proper grounding. Do not connect the ground wire to a gas pipe, water pipe, lightening rod or a telephone ground wire.
Improper placement of ground wires can result in electric shock.
The installation of an earth leakage breaker is necessary depending on the established location of the unit. Not installing an earth leakage breaker may result in electric shock.
Do not install the unit where there is a concern about leakage of combustible gas. The rare event of leaked gas collecting around the unit could result in an outbreak of fire.
For the drain pipe, follow the installation manual to insure that it allows proper drainage and thermally insulate it to prevent condensation. Inadequate plumbing can result in water leakage and water damage to interior items.

Position selection

1. Install adapter to change wind direction at the gas short circuit place.
2. When installing multiple units, there should be enough air inlet place against air in short circuit.
3. In snowy area, install the unit under the bracket or the snow-proof cover against the accumulative snow on the unit.
4. Do not install the unit at the place where the flammable gas will leak.
5. Install the unit at the strong enough place.
6. Install the unit at the flat place.
7. When the refrigerant pipe is leaded out from the bottom of the uni, the below section should be a bracket with over 500mm height, see below figure.
8. When being installed at the place with strong wind, set the air outlet of the unit and the wind direction vertical. Also fix the unit with the screw.
9. When opening the electric box cover for maintenance, please fix the cover with screw firmly.

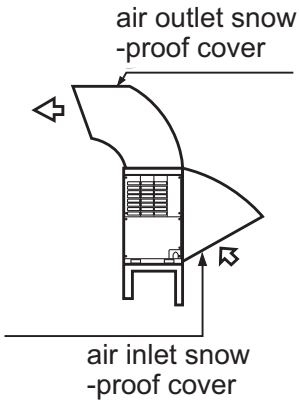

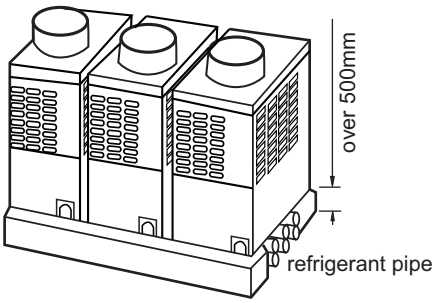

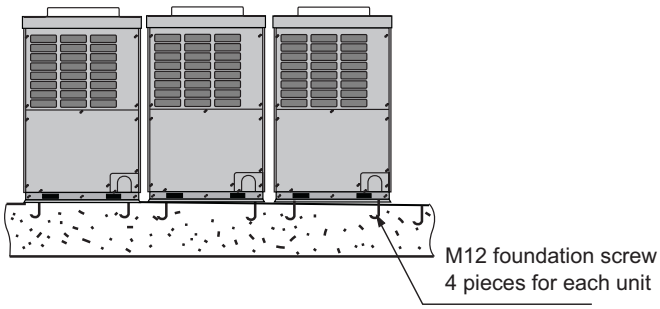

Transportation

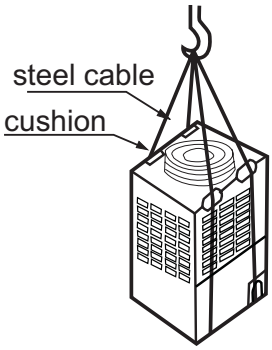

- In transportation, please don't dismantle the packaging, and move the unit to the installation location as closely as possible.
- If the packaging must be dismantled, hang up the unit with rope against damage.
- Don't hang the unit only at two points. When hanging the unit, don't sit on the unit. The unit should be upright.
- When removing the unit with the forklift, put the fork into the special hole at bottom of the unit.
- When being hanged, the rope should be 4 pieces of steel cable with over 6mm diameter.
- Put the cushion at the contact section between steel cable and the unit against the distortion or damage.

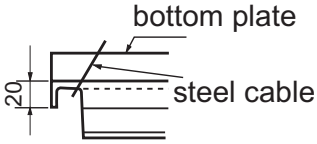

Installation

There is no obstacle within 2000mm above the outdoor unit.
The obstacle around the outdoor should not be 800mm higher than the bottom of outdoor.
When multiple modules are in combination, the outdoor should be in line as the capacity. The larger outdoor capacity, the closer to the main pipe of gather pipe.

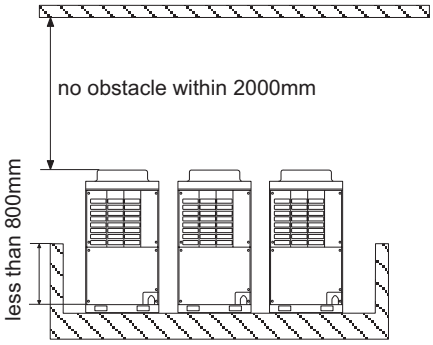

Refrigerant pipe connection

Pipe connection method:

- To ensure the efficiency, the pipe should be as short as possible.
- Daub the refrigerant oil on the connector and the flare nut.
- When bending the pipe, the bending semi-diameter should be as large as possible against the pipe being broken or bent.
- When connecting the pipe, aim at the center to thread the nut by hand and tighten it with the double spanners.
- Don't let the impurity such as sand, water etc into the pipe.

When fastening and loosing the nut, operate with double spanners, because only one spanner cannot execute firmly.

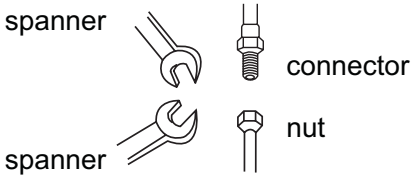

If threading the nut as not aiming at the center, the screw thread will be damaged, further it will cause leakage.

Cautions in piping installation:

1. When welding the connector with hard solder, charge nitrogen into the pipe against oxidation. Or the oxygen film in the pipe will clog the capillary and the expansion valve, even caue the deathy accident.
2. The refrigerant pipe should be clean. If the water and the other impurity enter the pipe, charge the nitrogen to clean the pipe. The nitrogen should flow under the pressure of about 0.5Mpa and when charging the nitrogen, stop up the end of the pipe by hand to enhance the pressure in the pipe, then loose the hand (meanwhile stop up the other end).
3. The piping installation should be executed after the stop valves are closed.
4. Before welding the valve and the pipes, use the wet cloth to cool down the valve and the pipes.
5. When the connection pipe and the branch pipe need to be cut down, please use the special shears and cannot use the saw.

1. Refrigerant piping

Allowable max. pipe length and high drop (without the oil pipe in below figure):

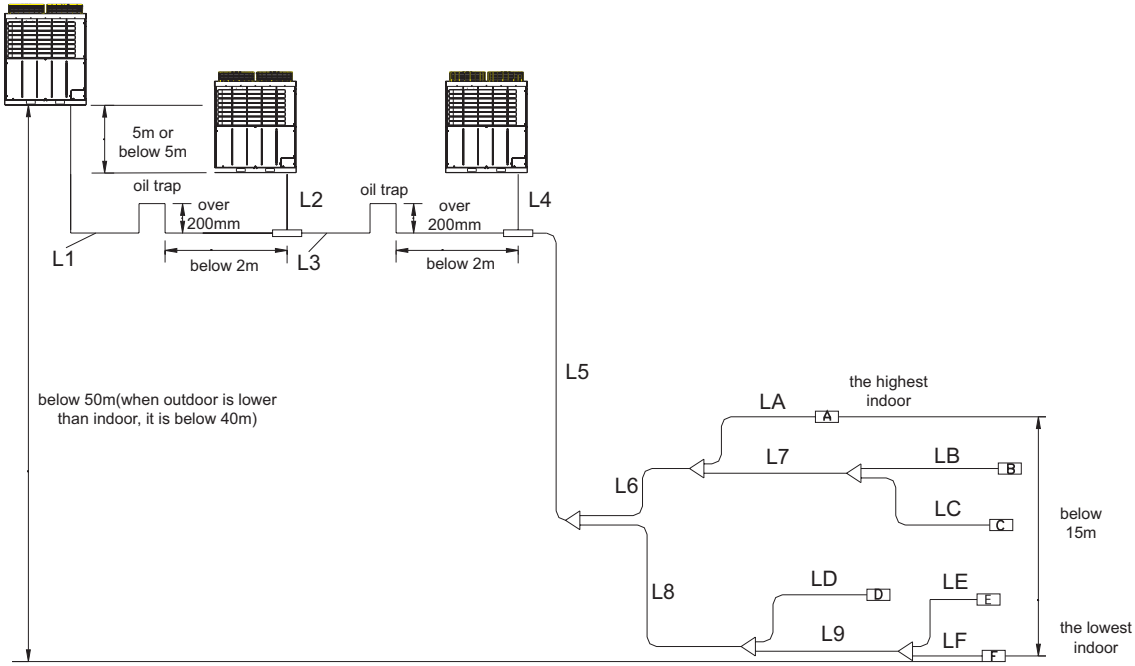

item	max. length (m)	pipe in above figure
single way total pipe length	300	L1+L2+L3+L4+L5+L6+L7+L8+L9+LA+LB+LC+LD+LE+LF
single way max. pipe length	150	L1+ L3+ L5+ L8+ L9+ LF
distance between outdoor and the 1st gather pipe	10	L1+L3
max. pipe length after the 1st branch pipe	40	L8+L9+LF
Main pipe actual length	110	L5
high drop between indoor and outdoor	50(when outdoor is lower than indoor:40)	----
high drop among indoors	15	----
high drop among outdoors	5	----

2. Selection of pipe material and size

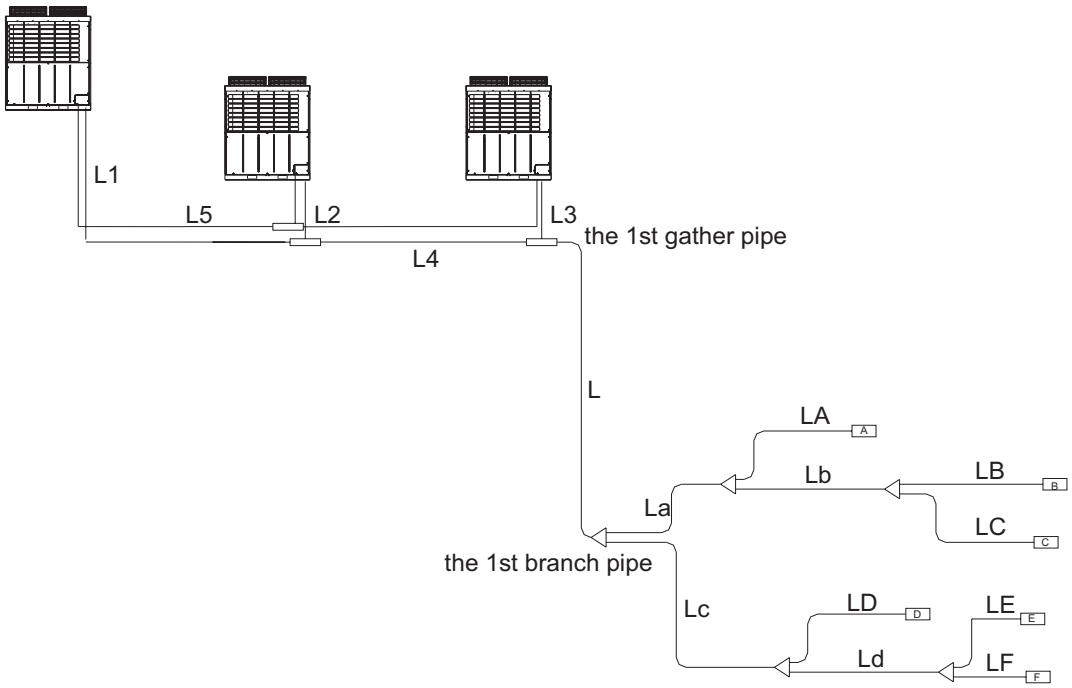

1.Pipe between indoor and branch pipe: LA, LB, LC, LD, LE, LF

capacity (kW)	gas pipe		liquid pipe	
	diameter	connection	diameter	connection
2.2	Ø12.7	flared	Ø6.35	flared
2.8	Ø12.7		Ø6.35	
3.6	Ø12.7		Ø6.35	
4.0	Ø12.7		Ø6.35	
4.5	Ø12.7		Ø6.35	
5.6	Ø15.88		Ø9.52	
7.1	Ø15.88		Ø9.52	
8.0	Ø15.88		Ø9.52	
9.0	Ø15.88		Ø9.52	
11.2	Ø19.05		Ø9.52	
14.0	Ø19.05		Ø9.52	

Pipe specification and tighten torque:

outer diameter(mm)	pipe thickness(mm)	tighten torque
6.35	coil pipe: over 0.8	14-18N.m(1.1-1.8kg.m)
9.52	coil pipe: over 0.8	34-42N.m(3.4-4.2kg.m)
12.7	coil pipe: over 0.8	34-42N.m(3.4-4.2kg.m)
15.88	coil pipe: over 1.0	68-82N.m(6.8-8.2kg.m)
19.05	straight pipe: over 1.0	100-120N.m(10-12kg.m)
	coil pipe: over 1.1	
22.22	straight pipe: over 1.0	——
25.4	straight pipe: over 1.0	——

outer diameter(mm)	pipe thickness(mm)	tighten torque
28.58	straight pipe: over 1.0	——
31.8	straight pipe: over 1.1	——
34.9	straight pipe: over 1.3	——
38.1	straight pipe: over 1.4	——
over 41.3	straight pipe: over 1.5	

2.Pipe diameter among branch pipes: La, Lb, Lc, Ld(accounting by the capacity after the branch pipe)

total indoor capacity after the branch pipe(*100W)	gas pipe	liquid pipe
~101	Ø15.88	Ø9.52
101~180	Ø19.05	Ø9.52
180~370	Ø28.58	Ø12.7
370~540	Ø31.8	Ø15.88
540~700	Ø38.1	Ø19.05
700~1100	Ø44.4	Ø22.22
1100~1300	Ø50.8	Ø22.22
over 1300	Ø54.1	Ø25.4

Note: 1. When the pipe between the distributing pipe and indoor pipe needs to be adjusted, please change the distributing pipe size.
2. According to the total capacity after the branch pipe, confirm the distributing pipe and the branch pipe.

3.Main pipe diameter among the first gather pipe and the first branch pipe: L (accounting by the total capacity of outdoor module in combination)

module HP	model	pipe diameter		
		gas pipe	enlarged gas pipe	liquid pipe
8HP	AV08NMTAIA	Ø25.4	Ø28.58	Ø12.7
10HP	AV10NMTAIA	Ø28.58	Ø31.8	Ø12.7
12HP	AV12NMTAIA	Ø31.8	Ø34.9	Ø15.88
14HP	AV14NMTAIA	Ø34.9	----	Ø15.88
16HP	AV16NMTAIA	Ø34.9	----	Ø15.88
18HP	AV18NMTAIA	Ø34.9	----	Ø19.05
20HP	AV20NMTAIA	Ø34.9	----	Ø19.05
22HP	AV22NMTAIA	Ø38.1	----	Ø19.05
24HP	AV24NMTAIA	Ø44.4	----	Ø19.05
26HP	AV26NMTAIA	Ø44.4	----	Ø19.05
28HP	AV28NMTAIA	Ø44.4	----	Ø22.22
30HP	AV30NMTAIA	Ø44.4	----	Ø22.22
32HP	AV32NMTAIA	Ø44.4	----	Ø22.22
34HP	AV34NMTAIA	Ø50.8	----	Ø22.22
36HP	AV36NMTAIA	Ø50.8	----	Ø22.22
38HP	AV38NMTAIA	Ø50.8	----	Ø22.22
40HP	AV40NMTAIA	Ø50.8	----	Ø22.22
42HP	AV42NMTAIA	Ø50.8	----	Ø22.22
44HP	AV44NMTAIA	Ø50.8	----	Ø25.4
46HP	AV46NMTAIA	Ø54.1	----	Ø25.4
48HP	AV48NMTAIA	Ø54.1	----	Ø25.4

Note: When the distance from outdoor to the longest indoor is over 90m, the gas pipe diameter of main pipe should be enlarged (only for 8HP, 10HP, 12HP).

4. Outdoor connection pipe: L1, L2, L3

module HP	model	pipe diameter	
		gas pipe	liquid pipe
8HP	AV08NMTAIA	Ø25.4	Ø12.7
10HP	AV10NMTAIA	Ø28.58	Ø12.7
12HP	AV12NMTAIA	Ø31.8	Ø15.88
14HP	AV14NMTAIA	Ø34.9	Ø15.88
16HP	AV16NMTAIA	Ø34.9	Ø15.88

5. Pipe diameter among gather pipes: L4(accounting due to the total outdoor capacity before the gather pipe)

module HP	model	pipe diameter	
		gas pipe	liquid pipe
18HP	AV18NMTAIA	Ø34.9	Ø19.05
20HP	AV20NMTAIA	Ø34.9	Ø19.05
22HP	AV22NMTAIA	Ø38.1	Ø19.05
24HP	AV24NMTAIA	Ø44.4	Ø19.05
26HP	AV26NMTAIA	Ø44.4	Ø19.05
28HP	AV28NMTAIA	Ø44.4	Ø22.22
30HP	AV30NMTAIA	Ø44.4	Ø22.22
32HP	AV32NMTAIA	Ø44.4	Ø22.22

6. Oil equalization pipe diameter: L5, Ø9.52

Note: When out of factory, the gas stop valve is welded with an assistant pipe, on the field, please move away the assistant pipe. For some outdoors, you need weld the changing pipe in the accessory bag to connect the gas stop valve. In each accessory bag, there is a T-shape 3-way pipe to connect the oil equalization pipe.

3. Branch pipe

The branch pipe selection will be different due to the indoor capacity, please refer to the former information.
Note:
A. Select the proper changing pipe for the connection between the branch pipe joint and the indoor unit, and make the pipe size identical with that of indoor.
B. When it is necessary to adjust the size of branch pipe joint or the indoor pipe, you'd better adjust the pipe at the branch pipe side.
C. The branch pipe joints (gas pipe, liquid pipe) must be horizontal or vertical.

(3) Branch pipe

The dimension for new branch pipe is not available temporarily

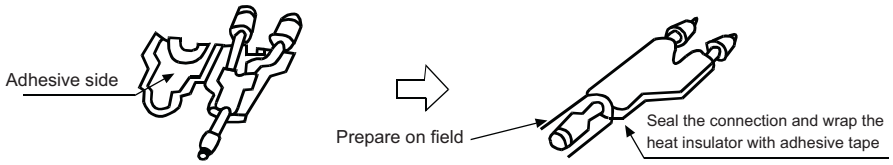

Note:

1. The diameter of pipe between the first branch pipe and outdoor unit should be identical with the main pipe of outdoor unit.
2. The diameter of pipe between branch pipe and indoor unit should be identical with the main pipe of indoor unit.
3. The diameter adjustment of pipe between branch pipe and machine should be proceeded at the branch pipe side.
4. Branch pipe(gas/liquid side) must be installed in horizontal or vertical direction
5. When welding the pipe, please must blow nitrogen. If not, a number of oxide will be produced and cause heavy damage.

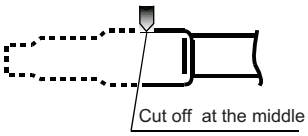

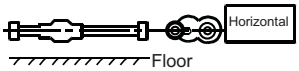

Right

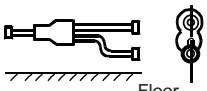

Wrong

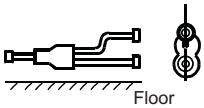

Wrong

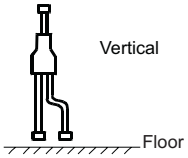

Right

4. Gather pipe(the dimensions except for being marked are all inner dimensions. O.D.: outer dimension)

model	gas side	liquid side
HZG-22C	0150700415 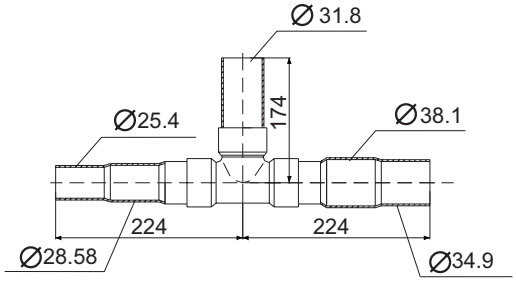 	0150700413 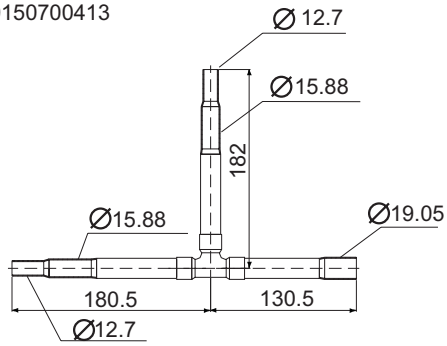
HZG-32C	0150700412 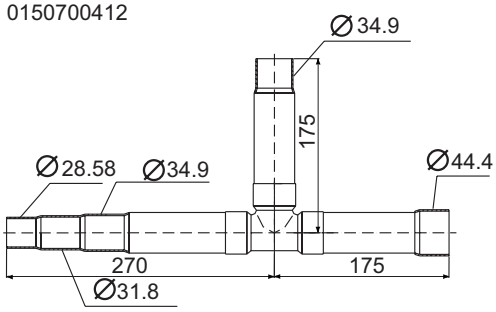 	0150700411 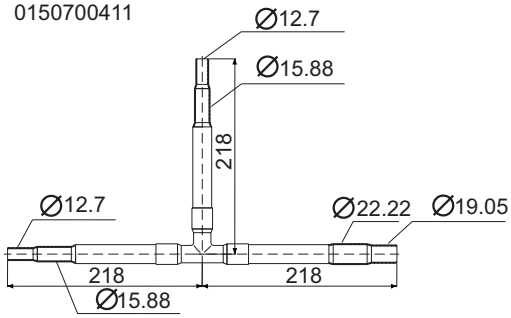
HZG-38C	0150700177 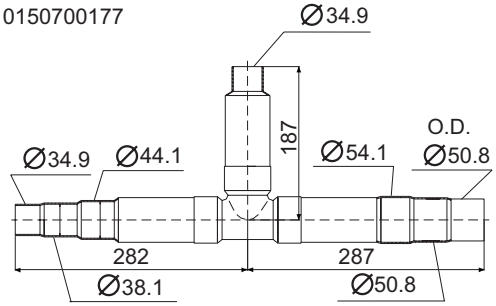 	0150700169 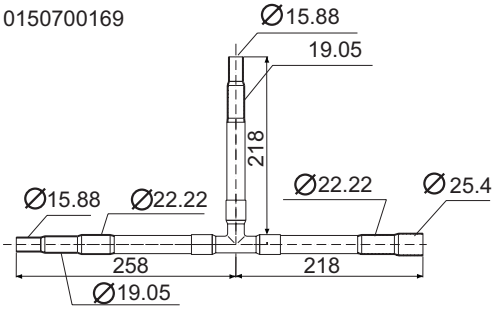
	0150700415 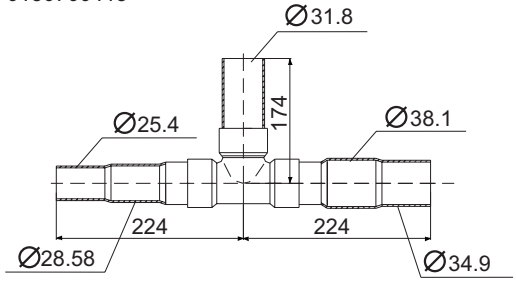 	0150700413 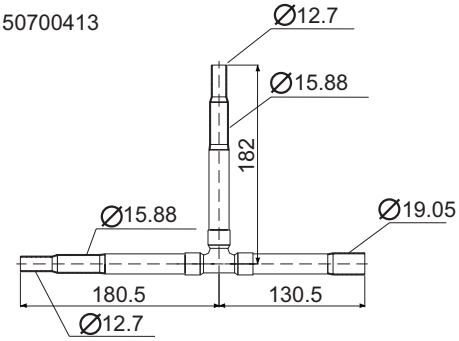

model	gas side	liquid side
HZG-48C	0150700177 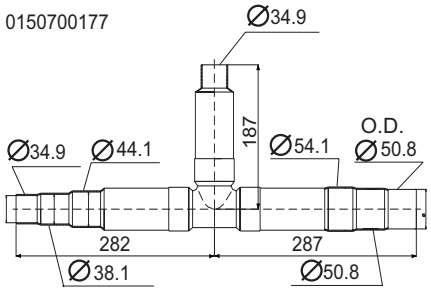 	0150700169 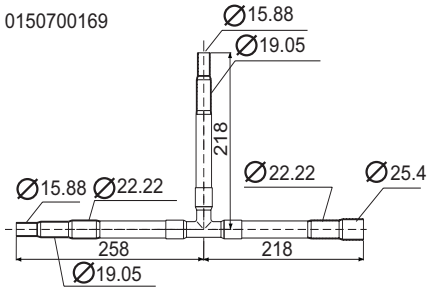
	0150700412 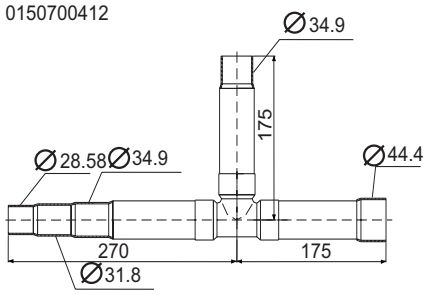 	0150700411 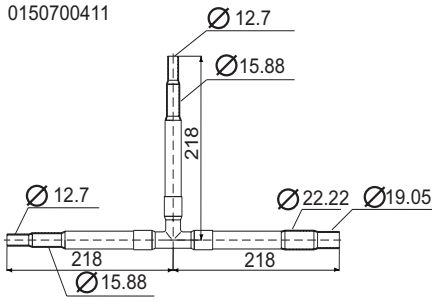

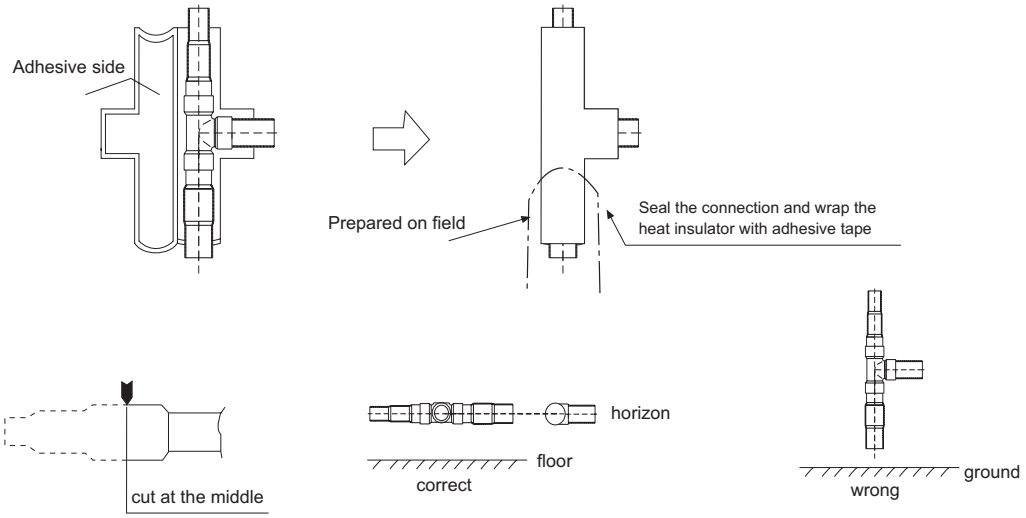

Note:

1. When connecting the gather pipe and the outdoor, please pay attention to the outdoor pipe size.
2. If the pipe between gather pipes and outdoor needs to be adjusted, please adjust the pipe at the gather pipe side.
3. Please install the gather pipe(gas side and liquid side) in horizon.
4. When welding the pipe with hard solder, charge the nitrogen to the pipe, or there will cause a large of oxide film, which will cause great accident. In addition, be careful not to make the water or dirt into the pipe.
5. When multiple modules are in combination, the outdoor should be in rank due to the capacity. The larger capacity, the closer to the main pipe.

5. Cautions for outdoor pipe installation

Because of the refrigerant oil will accumulate at the final outdoor, the pipe among outdoors should be horizontal, or the later outdoor is rised to form the oil return gradient.

5.1 Gather pipe design for multiple modules

A. If the distance between gather pipe and outdoor, or among gather pipes is over 2m, the trap will be necessary (as figure, it is over 200mm), and keep the trap to the gas side of gather pipe within 2m.

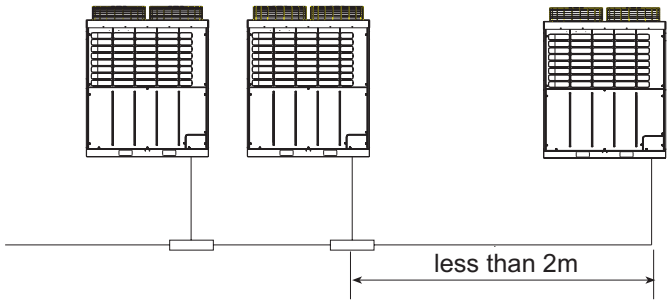

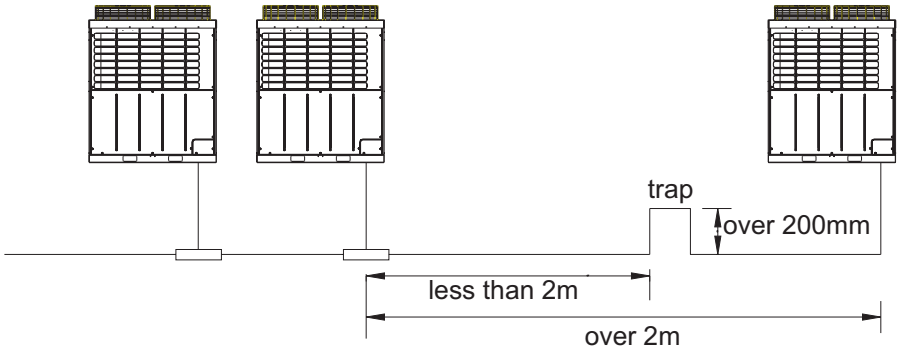

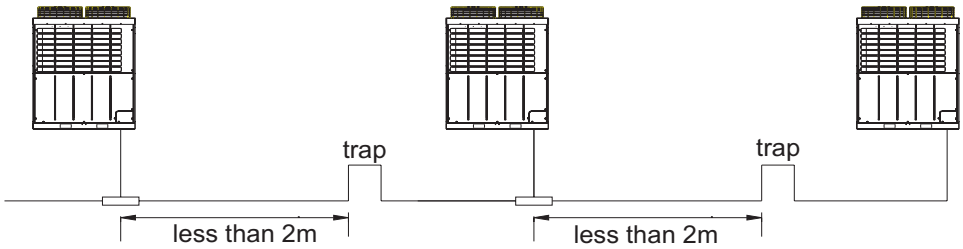

B. The pipe among outdoors must be horizontal or upwards against the refrigerant oil remaining in the pipe.

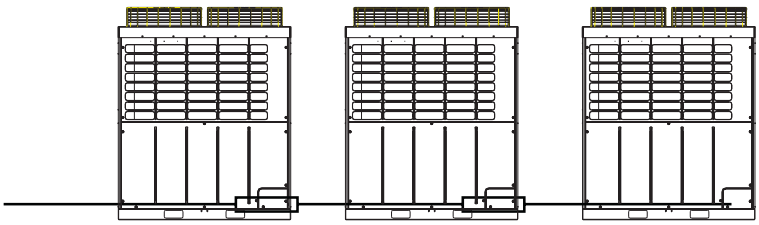

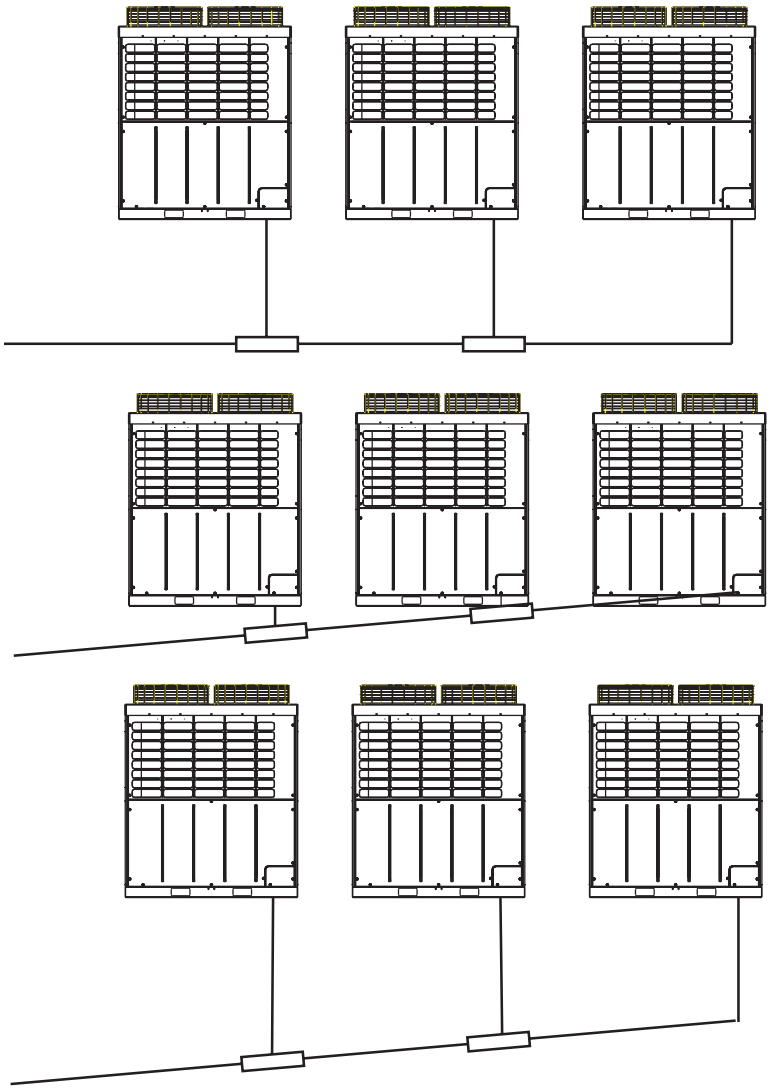

5.2 Improper pipe installation

A. If gather pipe is higher than outdoor, the refrigerant oil will stay at outdoor when the unit stops.

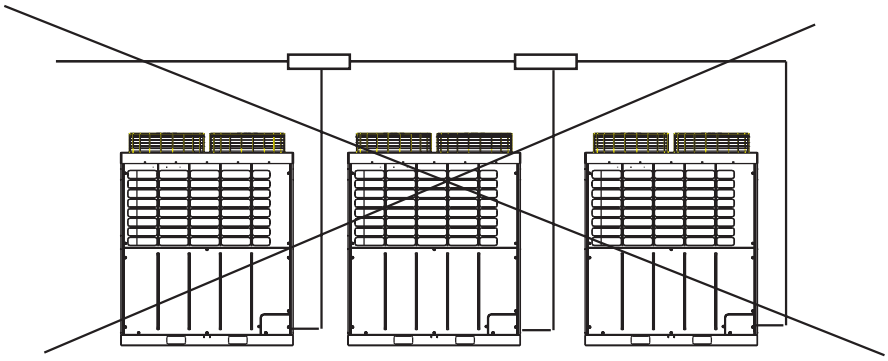

B. If one of outdoors is lower than gather pipe, the refrigerant oil will stay at this outdoor when the unit stops.

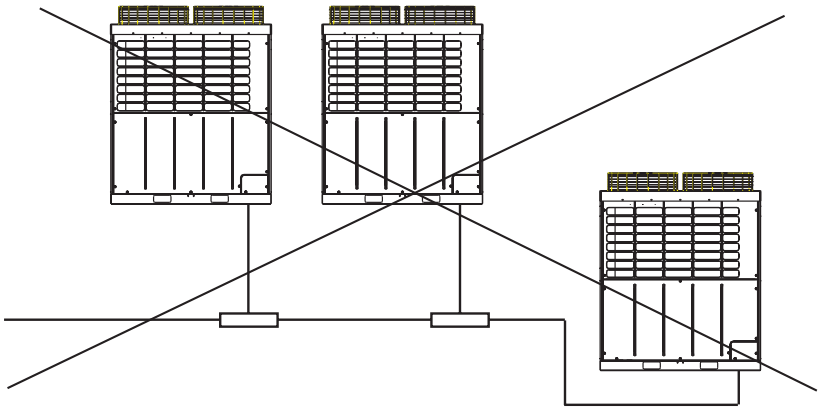

C. If the pipe among outdoors is downward, the refrigerant oil will stay at the pipe.

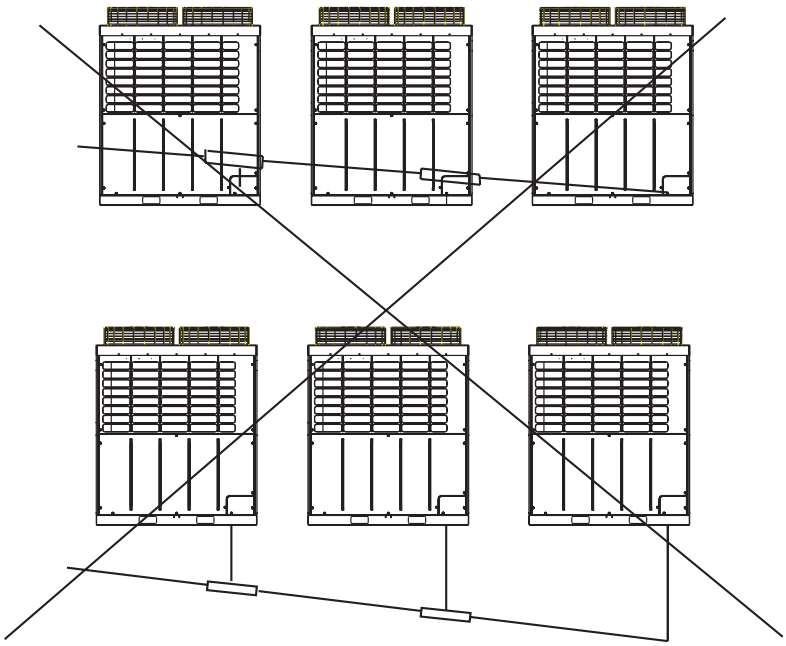

D. The proper installation will not let the refrigerant oil accumulate at outdoor.

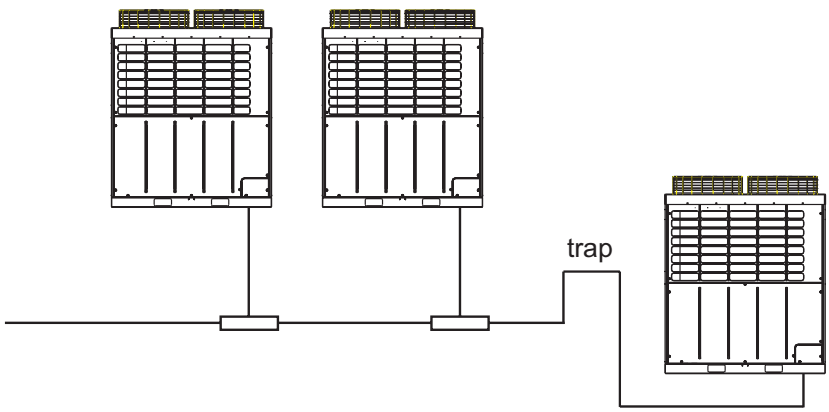

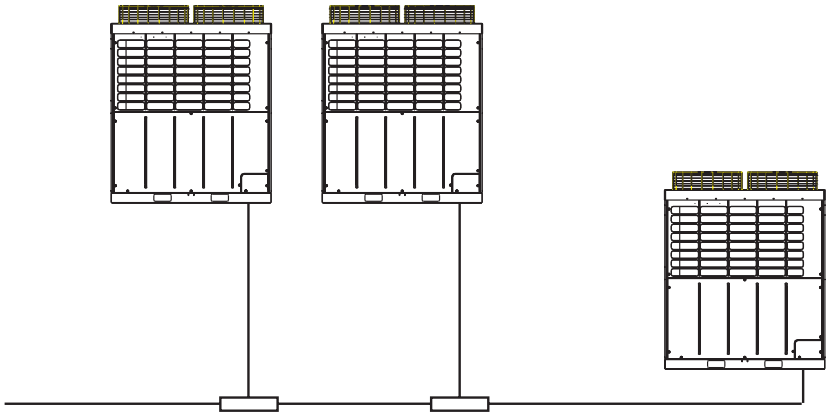

6. Outdoor exterior dimensions(unit: mm)

6.1 Single outdoor: AV08NMTAIA, AV10NMTAIA

a. There should be no obstacles in 2000mm above the top of outdoor unit;

b. Obstacles around outdoor should be less than 800mm to the bottom of unit.

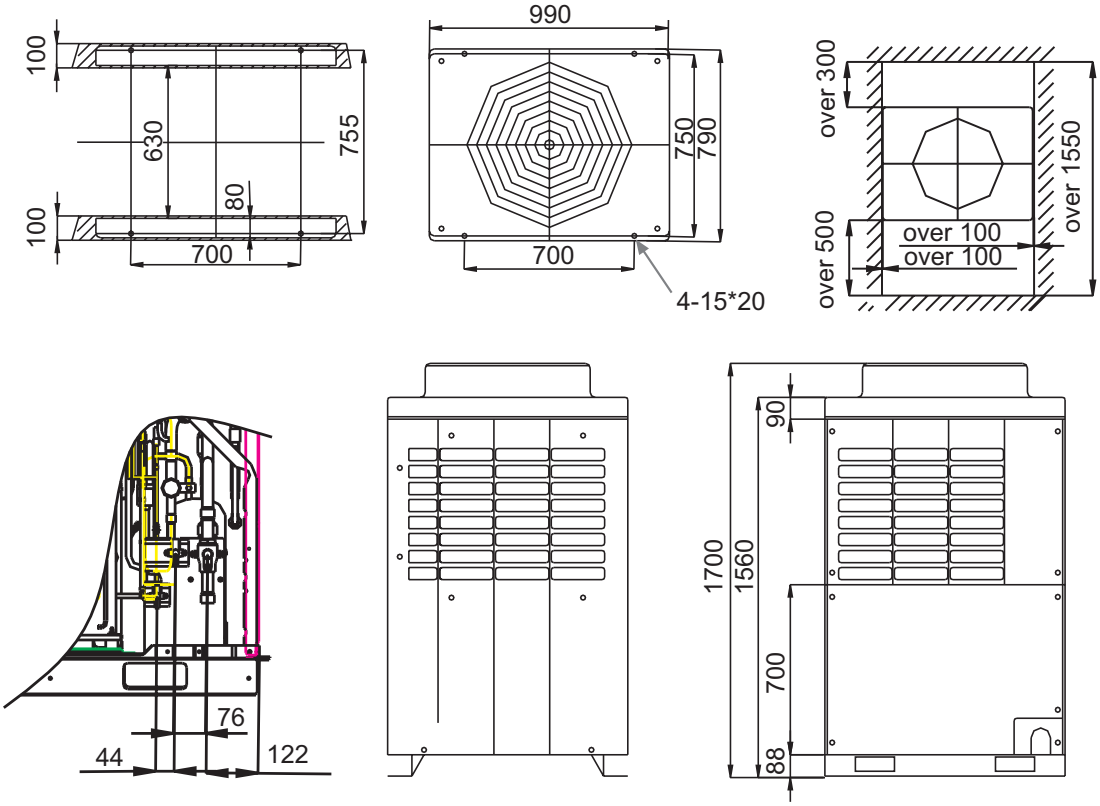

6.2 Single outdoor: AV12NMTAIA, AV14NMTAIA, AV16NMTAIA

a. There should be no obstacles in 2000mm above the top of outdoor unit;

b. Obstacles around outdoor should be less than 800mm to the bottom of unit.

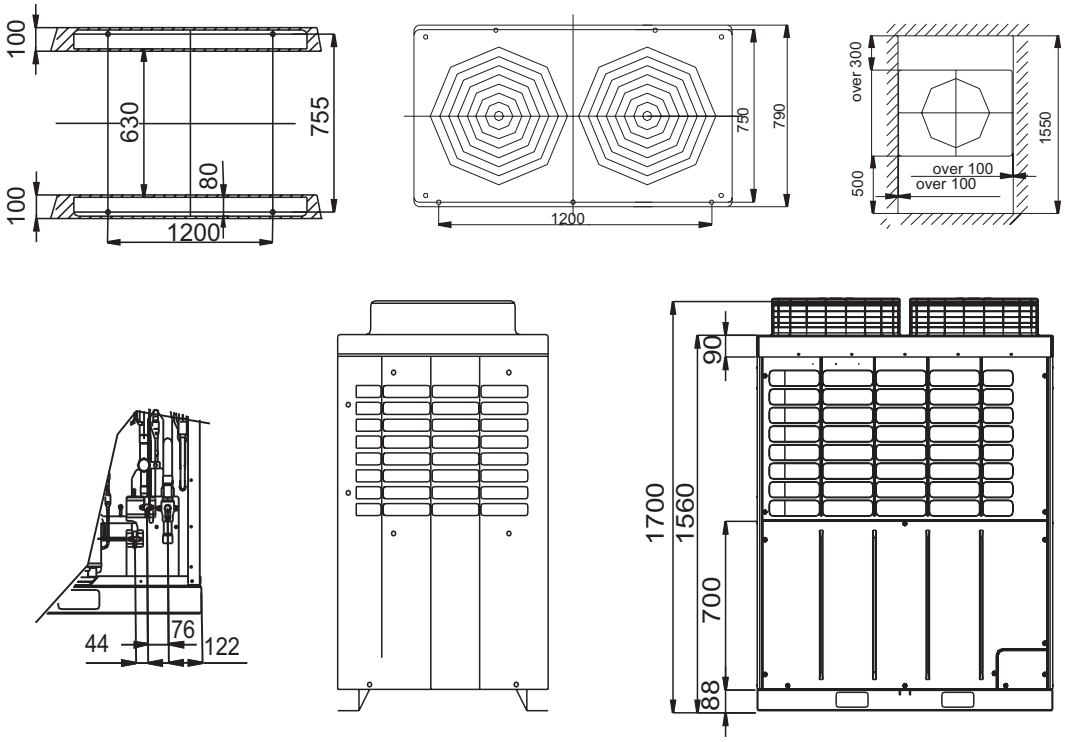

6.3 Outdoor in combination: AV18NMTAIA, AV20NMTAIA

a. There should be no obstacles in 2000mm above the top of outdoor unit;

b. Obstacles around outdoor should be less than 800mm to the bottom of unit.

c. The outdoor with larger capacity should be closer to the 1st gather pipe;

d. The distance between two outdoor units in the same line and the distance from unit to the wall can be increased for easy maintenance if there is enough space.

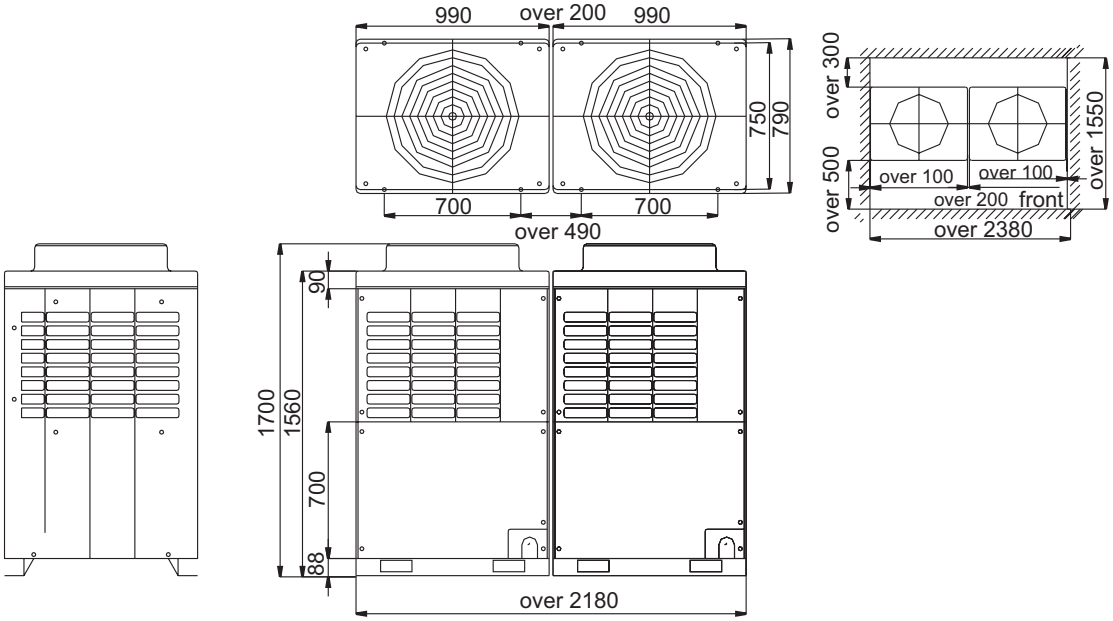

6.4 Outdoor in combination: AV22NMTAIA, AV24NMTAIA, AV26NMTAIA
a. There should be no obstacles in 2000mm above the top of outdoor unit;
b. Obstacles around outdoor should be less than 800mm to the bottom of unit.
c. The outdoor with larger capacity should be closer to the 1st gather pipe;
d. The distance between two outdoor units in the same line and the distance from unit to the wall can be increased for easy maintenance if there is enough space.

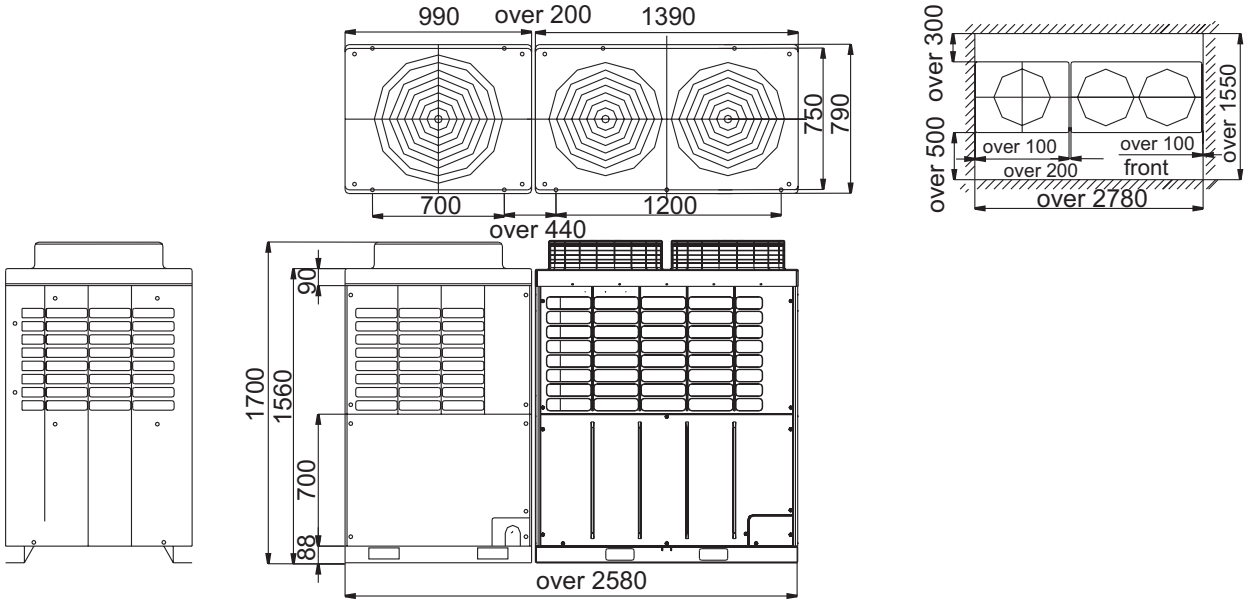

6.5 Outdoor in combination: AV28NMTAIA, AV30NMTAIA, AV32NMTAIA
a. There should be no obstacles in 2000mm above the top of outdoor unit;
b. Obstacles around outdoor should be less than 800mm to the bottom of unit.
c. The outdoor with larger capacity should be closer to the 1st gather pipe;
d. The distance between two outdoor units in the same line and the distance from unit to the wall can be increased for easy maintenance if there is enough space.

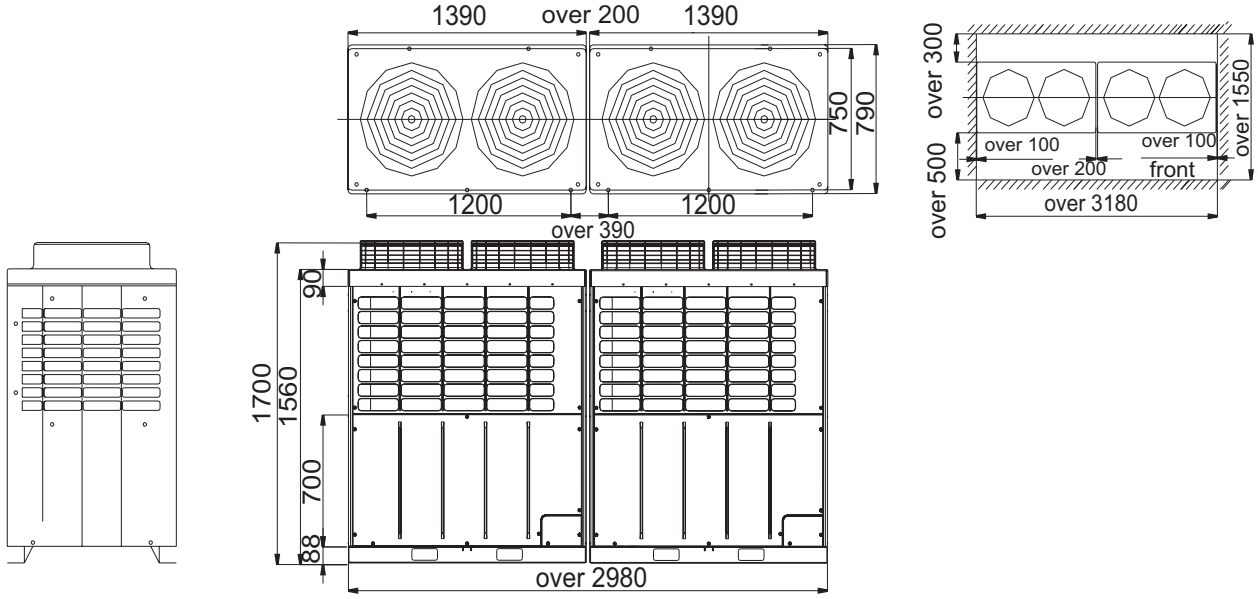

6.6 Outdoor in combination: AV34NMTAIA, AV36NMTAIA
a. There should be no obstacles in 2000mm above the top of outdoor unit;
b. Obstacles around outdoor should be less than 800mm to the bottom of unit.
c. The outdoor with larger capacity should be closer to the 1st gather pipe;
d. The distance between two outdoor units in the same line and the distance from unit to the wall can be increased for easy maintenance if there is enough space.

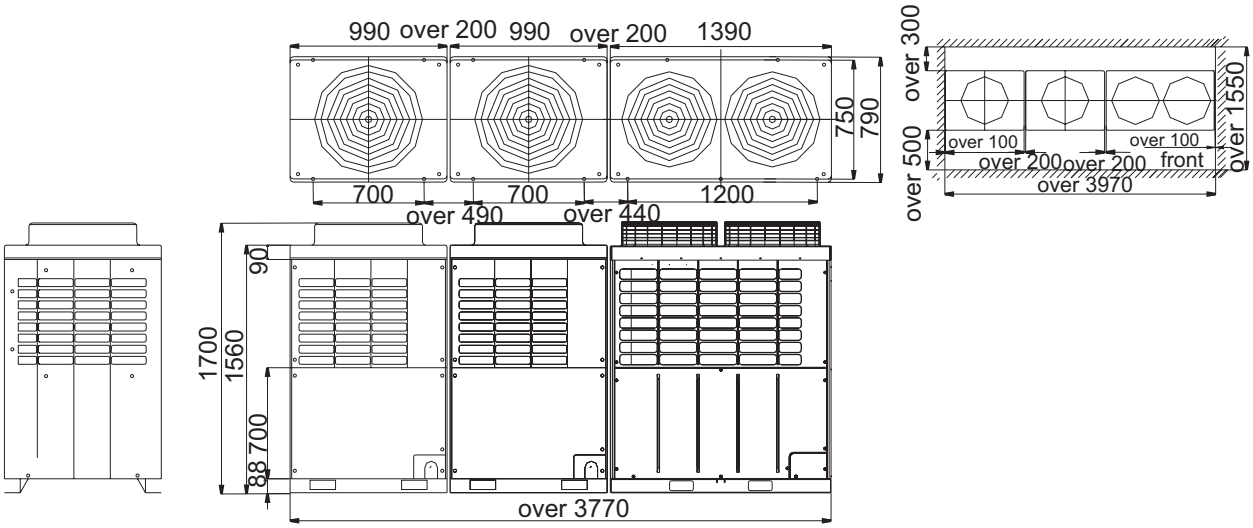

6.7 Outdoor in combination: AV38NMTAIA, AV40NMTAIA, AV42NMTAIA
a. There should be no obstacles in 2000mm above the top of outdoor unit;
b. Obstacles around outdoor should be less than 800mm to the bottom of unit.
c. The outdoor with larger capacity should be closer to the 1st gather pipe;
d. The distance between two outdoor units in the same line and the distance from unit to the wall can be increased for easy maintenance if there is enough space.

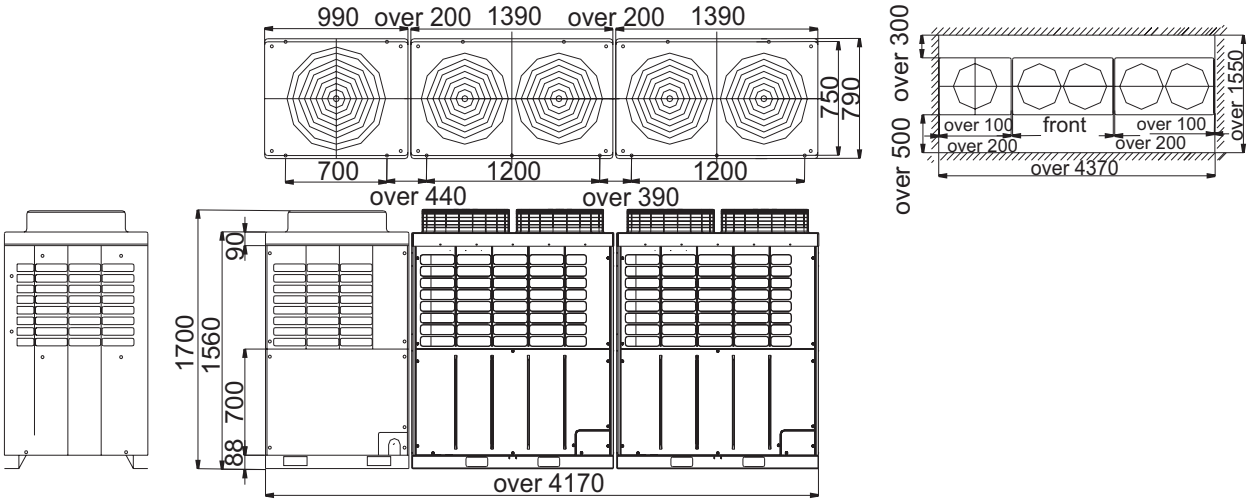

6.8 Outdoor in combination: AV44NMTAIA, AV42NMTAIA, AV48NMTAIA
a. There should be no obstacles in 2000mm above the top of outdoor unit;
b. Obstacles around outdoor should be less than 800mm to the bottom of unit.
c. The outdoor with larger capacity should be closer to the 1st gather pipe;
d. The distance between two outdoor units in the same line and the distance from unit to the wall can be increased for easy maintenance if there is enough space.

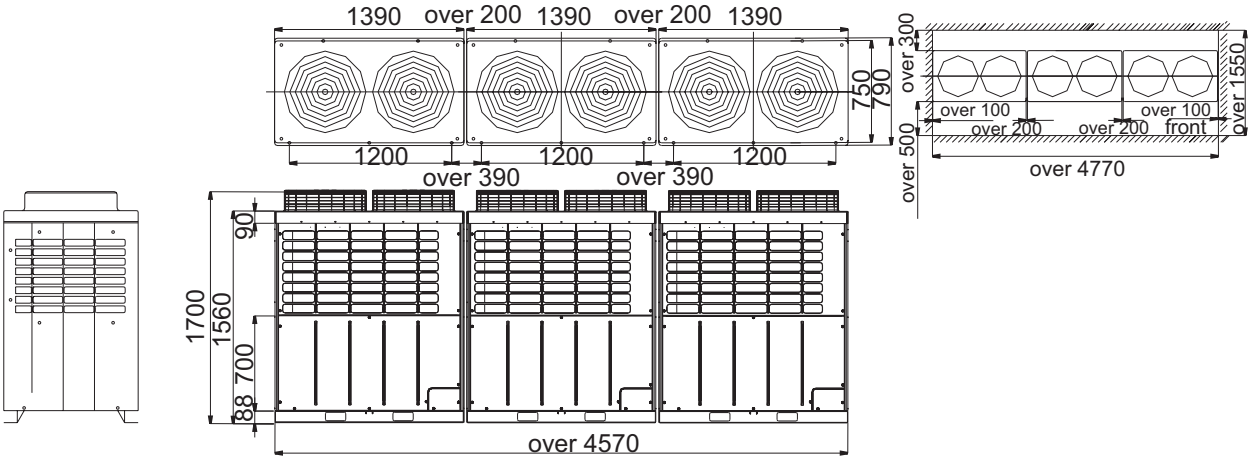

7. Dimensions for outdoor unit in groups

(1) When outer wall is lower than the outdoor condenser

A. Sites for one-row layout

The distance between two outdoor units in the same line and the distance from unit to the wall can be increased for easy maintenance if there is enough space.

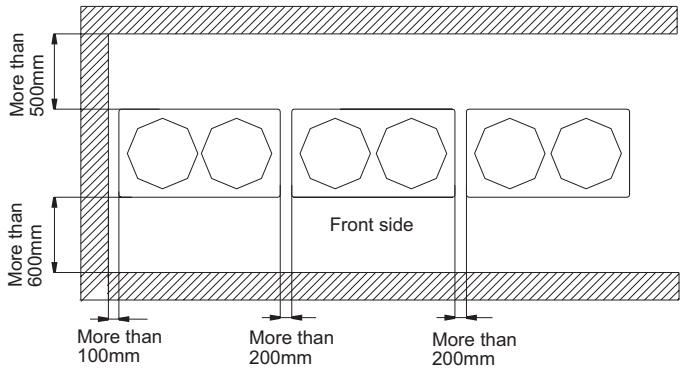

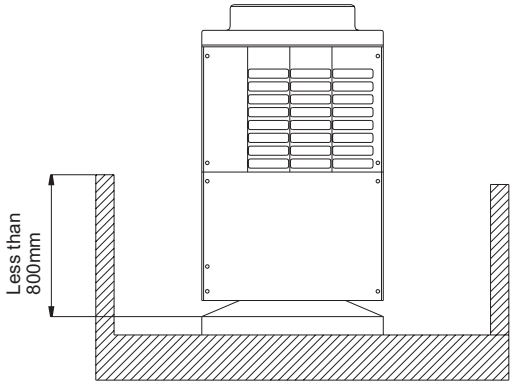

B. Sites for two-row layout

The distance between two outdoor units in the same line and the distance from unit to the wall can be increased for easy maintenance if there is enough space.

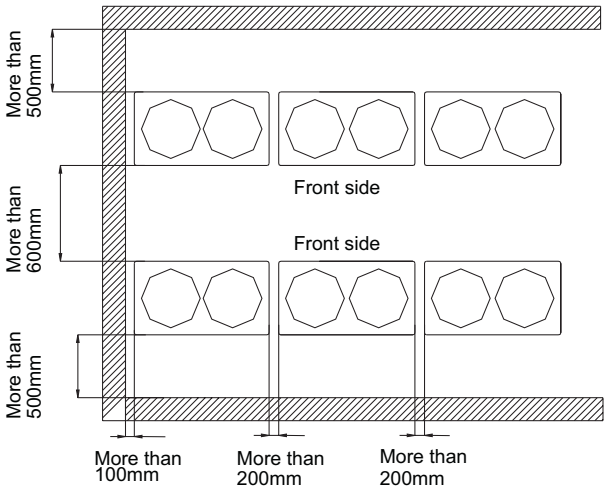

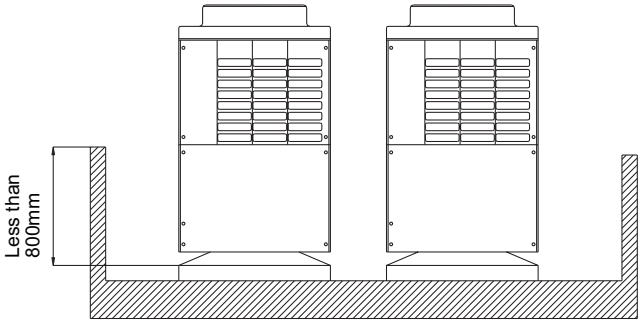

C. Sites for three-row layout

The distance between two outdoor units in the same line and the distance from unit to the wall can be increased for easy maintenance if there is enough space.

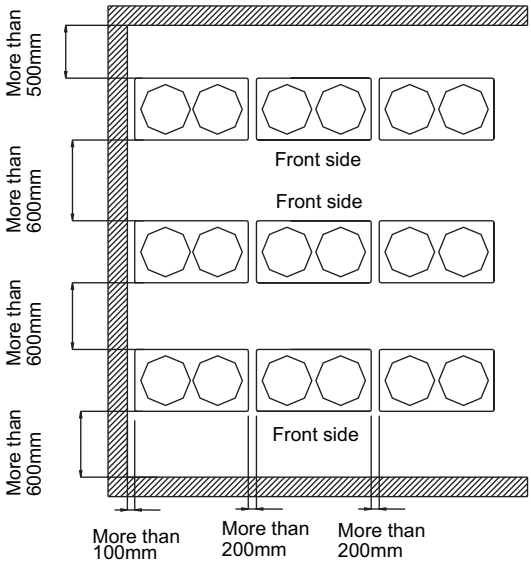

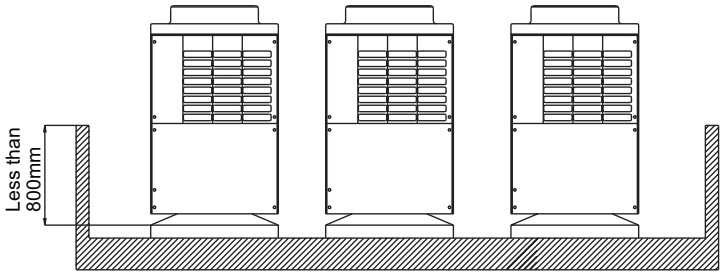

D. Piping

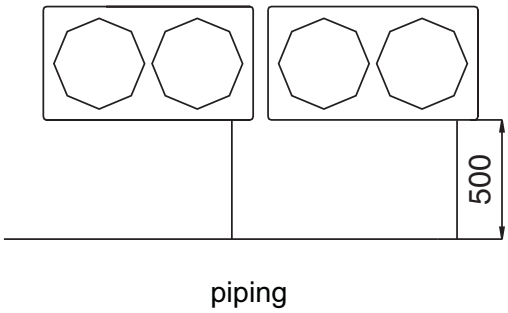

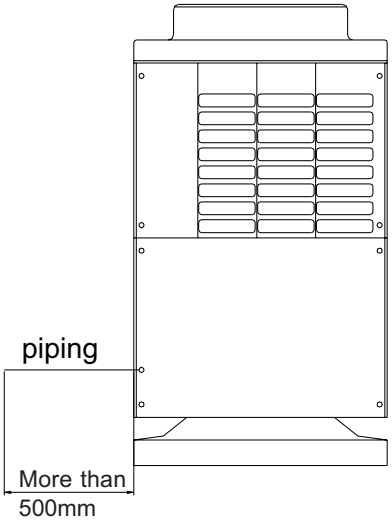

(2) Wall higher than the outdoor condenser

A. Place with air inlet hole

Notes:

A. Fan speed Vs at air inlet is 1.5m/s or below.
B. Air outlet height HD=H-h and below 1m.

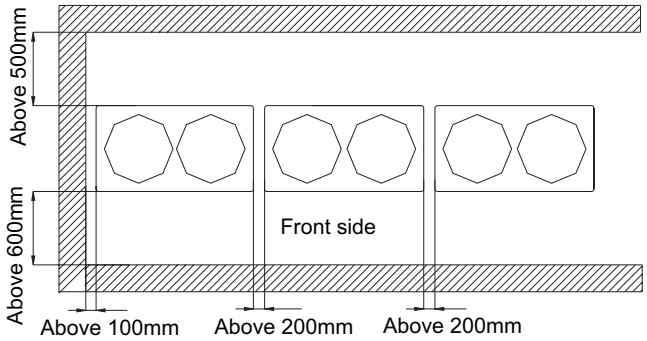

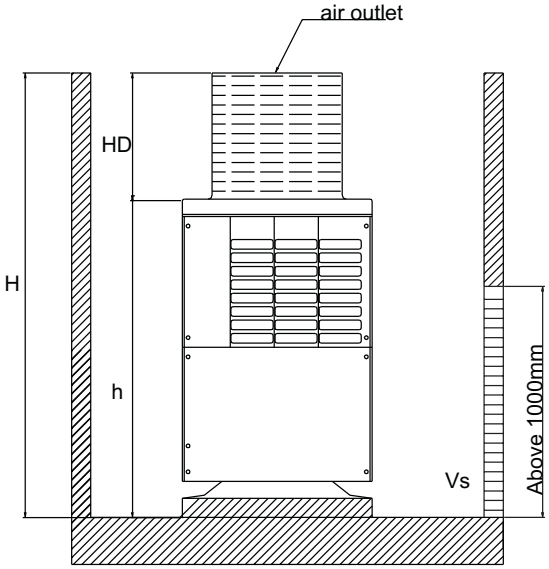

B. Place without air inlet hole

Notes:

A. Set a 500~1000mm bracket.

B. Air outlet height HD=H-h and below 1m.

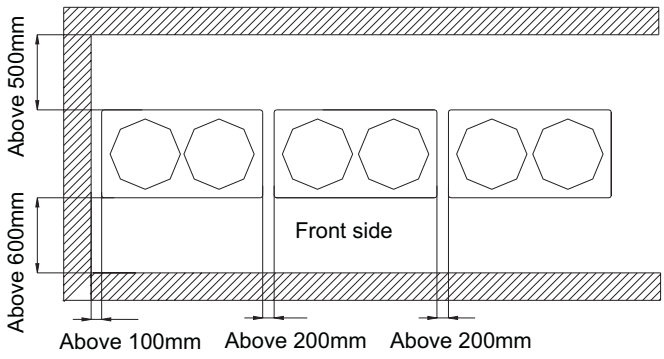

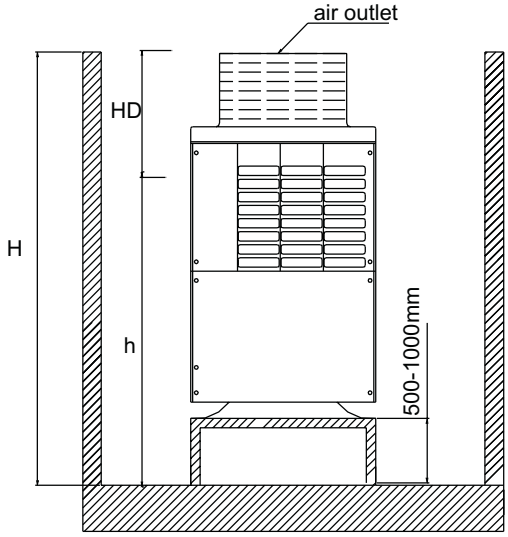

8. Precaution in installation

(1)Treatment for pipes to prevent compressor being blocked

Compressor failure includes being blocked and motor burnt. It manybe because of damaged parts, but mainly it is relative to the installation.

Measures to prevent piping failure

A. Charge nitrogen fluently

1)Non-flow nitrogen will produce the film *Cu_2O). The oxide film will cause the serious failure.

2)The exterior substance will cause the capillary or the expansion valve blocked, abnormal discharging temperature, not cooling or heating, compressor locked, etc.

B. Do not let water into the pipe.

1)Do not install the pipe when raining.

2)Hang and fix the outdoor pipe to prevent water into it. The water in pipe will cause the following effect: the capillary or the expansion valve blocked, refrigerant hydrolized into acid substance, cause abnormal crystal by refrigerant oil reaction.

C. Do not let dust or other matter such as the concrete fragment, sand, or the clinker etc into the pipe. Please deal with them carefully.

D. Adopt the specified copper pipe.

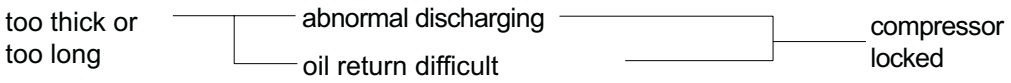

E. Fix the refrigerant pipe

1)In operation, the pipe will vibrate and expand or shrink. If not being fixed, the refrigerant will focus on one part to cause the broken pipe.

2)To prevent the central stress, fix the pipe for every 2-3m.

(2)Heat insulation (Gas pipe, liquid pipe and oil equalization pipe must be treated with the heat insulation material against heat release and condensate)

A. The heat insulation material can prevent the condensate causing on gas pipe, which will result in leakage; and the material can be against burn someone for the high temperature on the gas pipe.

B. Wrap the indoor connection pipe with the heat insulation material.

1)Gas pipe and liquid pipe should be heat insulated separately.

2)The material for gas pipe should endure the high temperature over 120*.

3)The material thickness should be over 10mm, when ambient temp. is 30*, and the relative humidity is over 80*, the material thickness should be over 15mm.

C. The material should cling the pipe closely without gap. The connection wire and the heat insulation material are put together and then wrapped with the adhesive tape.

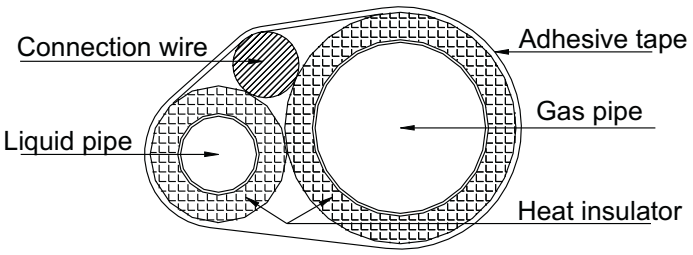

(3)Leakage testing

A.Charge nitrogen(to test the leakage condition)

Connect the connection pipe to checking joint of the gas pipe stop valve, and keep the stop valve close, charge the nitrogen, the gas pressure should be 30Kf/cm^2.

B. Evacuation

1)Evacuation of refrigerant pipe: Evacuate the system through the checking joints on liquid pipe stop valve and on the gas pipe stop valve. (if only evacuating through liquid pipe stop valve, at least one indoor EEV must open).After evacuation, open stop valve fully and then take down the evacuation pipe.

2)Evacuation of oil equalization pipe:If two or more outdoor units are connected, evacuate through the checking joints on oil pipe stop valve. After evacuation,take down the evacuation pipe, and confirm the stop valve open fully.(when there is only with the master unit, no need evacuation. Please confirm the oil equalization valve close fully to avoid the leakage of refrigerant and the oil)

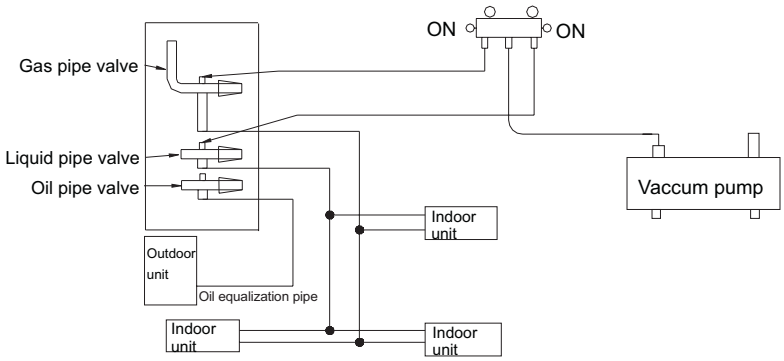

(4) Refrigerant charging and additional charging

Model	additonal refrigerant charging per meter							charge when out of factory
	∅25.4	∅22.22	19.05	15.88	12.7	9.52	6.35	
AV08NMTAIA	0.53kg/m	0.4kg/m	0.28kg/m	0.2kg/m	0.12kg/m	0.06kg/m	0.03kg/m	8kg
AV10NMTAIA								10kg
AV12NMTAIA								14kg
AV14NMTAIA								16kg
AV16NMTAIA								16kg

Remarks:

A. Charging amount when out of factory excludes the refrigerant in the pipe.

B . Additional charging amount=actual length of liquid pipe*additional amount per meter liquid pipe

Additional charging amount=L1*0.53+L2*0.4+L3*0.28+L4*0.2+L5*0.12+L6*0.06+L7*0.03

L1: total length of 25.4 liquid pipe L2: total length of 22.22 liquid pipe

L3: total length of 19.05 liquid pipe L4: total length of 15.88 liquid pipe

L5: total length of 12.7 liquid pipe L6:total length of 9.52 liquid pipe

L7: total length of 6.35 liquid pipe

(5) Pipe specification and thickness (mm):

outer diameter	pipe thickness	outer diameter	pipe thickness
6.35	coil pipe: over 0.8	28.58	straight pipe: over 1.0
9.52	coil pipe: over 0.8	31.8	straight pipe: over 1.1
12.7	coil pipe: over 0.8	34.9	straight pipe: over 1.3
15.88	coil pipe: over 1.0	38.1	straight pipe: over 1.4
19.05	straight pipe: over 1.0	41.3 and more	straight pipe: over 1.5
	coil pipe: over 1.1		
22.22	straight pipe: over 1.0		
25.4	straight pipe: over 1.0		

3.2 Indoor installation

3.2.1 Ceiling concealed type installation

(1) Installation and dimension of indoor unit

⚠ WARNING

- It should be installed at places where it is firm enough to bear the air conditioner to prevent falling.
- To avoid the strong wind and and earthquake, it should be installed due to specific requirements. Improper installation may lead to accidents.

After selecting the installation space, proceed the following steps:

1. Drill a hole in the wall and insert the connecting pipe and wire through a PVC wall-through tube purchased locally. The wall hole shall be with a outward down slope of at least 1/100. (See Figure 2)
2. Before drilling check that there is no pipe or reinforcing bar just behind the drilling position. Drilling shall avoid at positions with electric wire or pipe.
3. Mount the unit on a strong and horizontal building roof. If the base is not firm, it will cause noise, vibration or leakage.
4. Support the unit firmly.
5. Change the form of the connection pipe, connection wire and drain pipe so that they can go through the wall hole easily.

Model	a	b	c	d	e	f	g	h	i
AD07~122MLAIA	418	538	483	220	255	508	610	131	—
AD14~242MLAIA	1002	483.5	131	1105	255	105	880	970	220

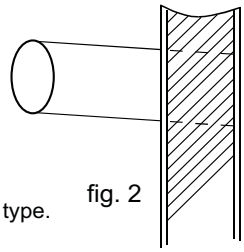

fig. 2

AD07~122MLAIA Evaporators of AD07, AD09 are 2-row type; evaporator of AD12 is 3-row type.

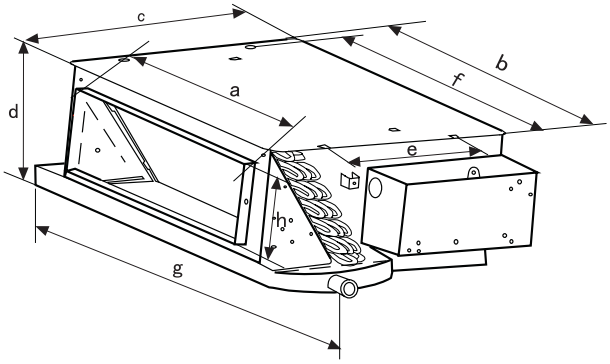

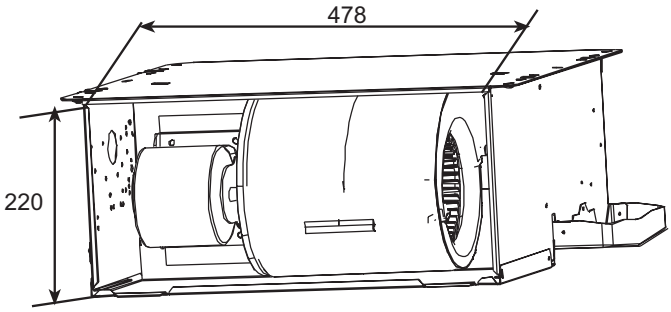

AD14~242MLAIA Evaporators of AD16,18 are 2-row type; evaporator of AD24 is 3-row type.

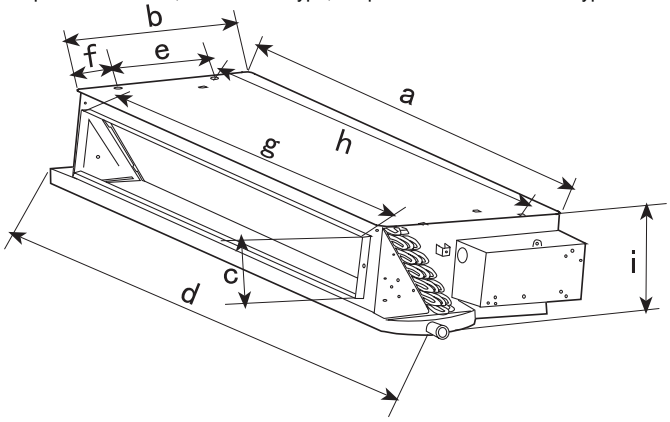

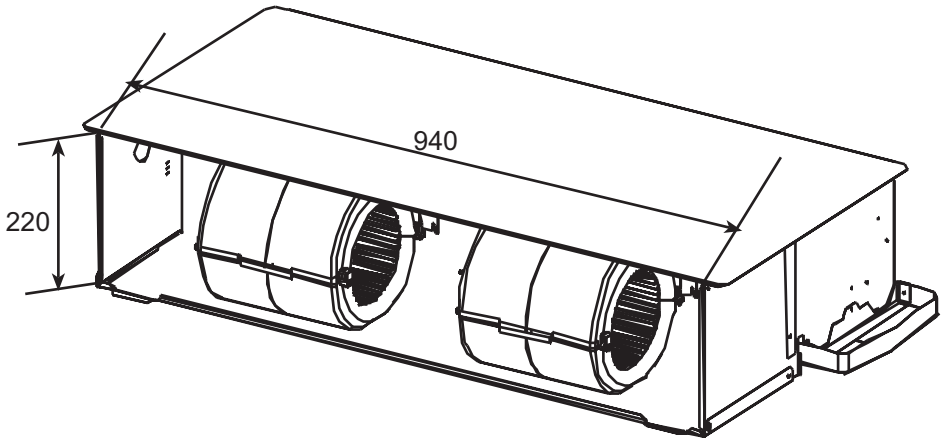

(2) Installation position (unit: mm)

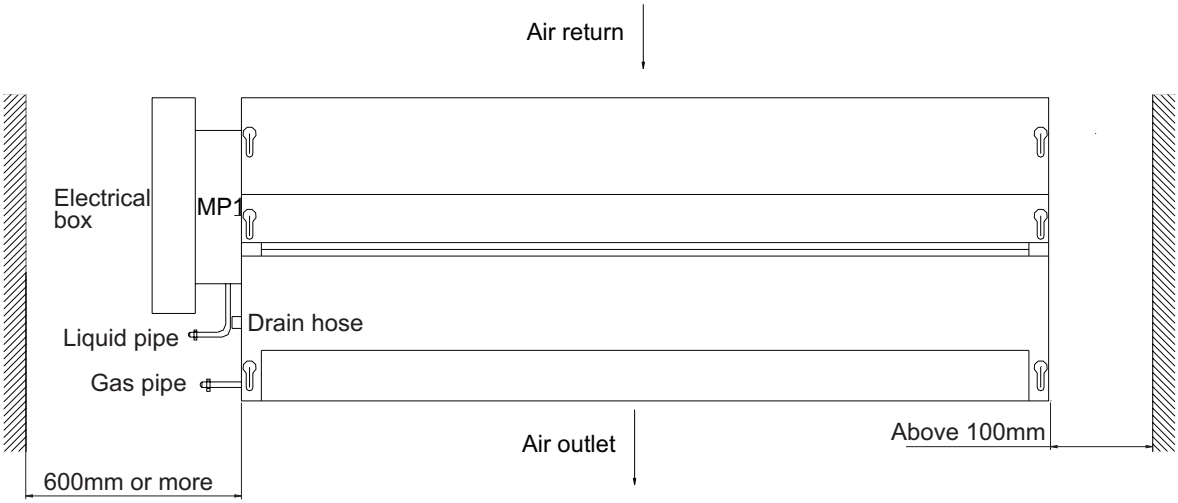

(3) Installation of air return duct

AD07-18 is with air return and is set as back return type when out of factory. When installation, it can be changed to down return type.

Ceiling Concealed type indoor unit must be with air return duct when installation, as figure 3 and 4:

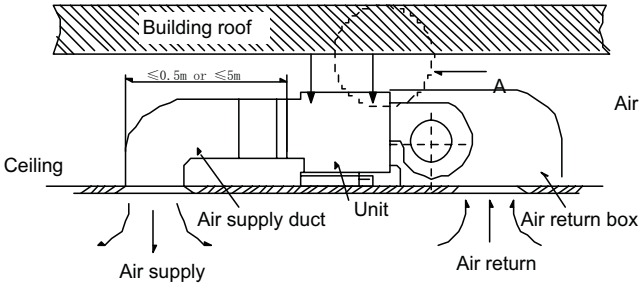

Fig. 3

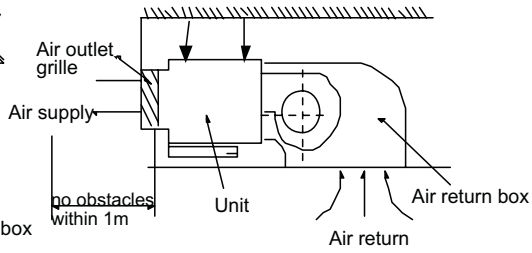

Fig. 4(for A)

Every air sending duct and air return duct shall be fixed on the ceiling prefabricated panel by the iron bracket. The duct joint is sealed with the glue. The recommended distance between the edge of the air return duct and the wall is over 150mm.
The distance from the air outlet of the duct to the air outlet of the air conditioner is decided by the length of duct and static pressure terminal:
Installation of short and long ducts is as below figure, when connecting the short ducts, use the low static pressure terminals, which is white, the distance from the air outlet of the duct to the air outlet of the air conditioner shall be no more than 0.5 m; When connecting the long ducts, use the middle static pressure terminals, which is red. The distance from the air outlet of the duct to the air outlet of the air conditioner shall be no more than 5m.

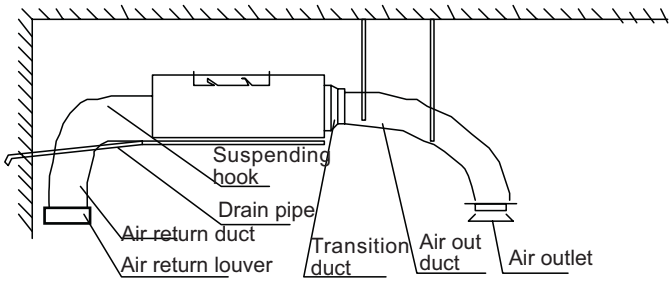

The gradient of the condensate water pipe shall keep over 1/100. The condensate water pipe shall be thermal insulated.

Installation of indoor unit duct

A. Installation of air sending duct

This unit uses rectangle duct, the diameter of the duct is less than air outlet.

B. Installation of air return duct

Use rivet to connect the air return duct on the air return inlet of the indoor unit, then connect the other end with the air return blind. As Fig. 2 shown.

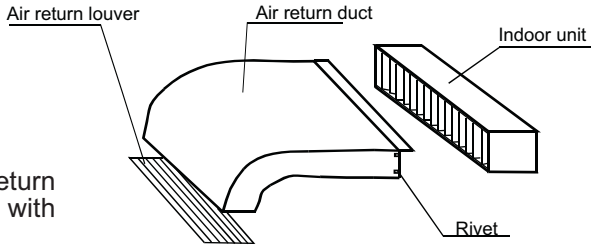

Fig. 2 Connection of air return duct

C. Thermal insulation of duct

Air-sending duct and air return duct shall be thermally insulated. First stick the gluey nail on the duct, then attach the heat preservation cotton with a layer of tinfoil paper and use the gluey nail cap to fix. Finally use the tinfoil adhesive tape to seal the connected part. As Fig. 3 shown.

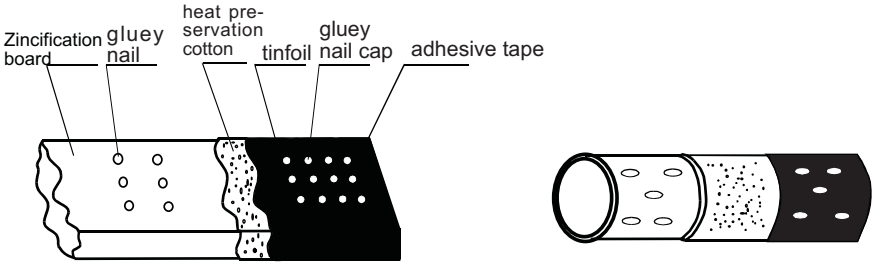

Fig. 3

Note:

(1)The air sending/return duct should be heat insulated properly.

(2)Forbidden to get air return directly from the ceiling.

(3)Air return must in indoor, not allowed in the corridor.

(6) Installing the suspension screw:

Use M8 or M10 suspension screws (4,prepared in the field)(when the suspension screwheight exceeds 0.9m, M10 size is the only choice).These screws shall be installed as follows with space adapting to air conditioner overall dimensions according to the original building structures.

Wooden structure

A square wood shall be supported by the beams and then set the suspension screws.

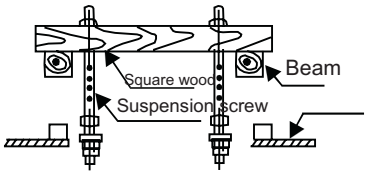

New concrete slab

To set with embedded parts, foundation bolts etc.

Knife embedded part

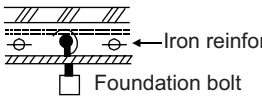

Guide plate embedded part

(Pipe suspension foundation bolt)

Original concrete slab

Use hole hinge,hole plunger or hole bolt.

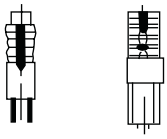

Steel reinforcement structure

Use steel angle or new support steel angle directly.

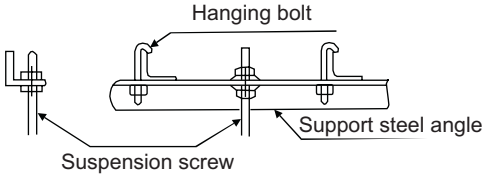

Hanging of the indoor unit

Fasten the nut on the suspension screw and then hang the suspension screw in the T slot of the suspension part of the unit. Aided with a level meter,adjust level of the unit within 5mm.

Suspension units as follows:

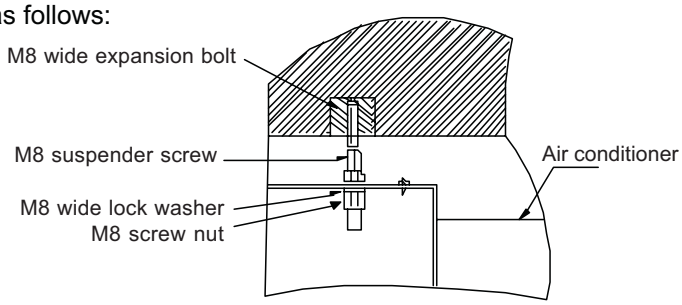

Fig. 5

3.2.2 4-way cassette installation

(1) Selection of Installation Place

A. Place above the ceiling where have enough space to arrange the unit.
B. Place where the drainage pipe can be arranged well.
C. Distance from air outlet to the floor not more than 2.7m.
D. Place where inlet and outlet air of indoor ot be blocked.
E. Place strong enough to support the unit weight.
F. No expensive articles such as television and piano below indoor unit.
G. Place more than 1m away from television and radio to avoid disturbing television and radio.

(2)Installation space

Ensure there is enought space for installation and maintenance.

Installation height not more than 2.7m, or when the ceiling is over 2.7m, the warm air can not arrive the floor.

AB07~AB16:

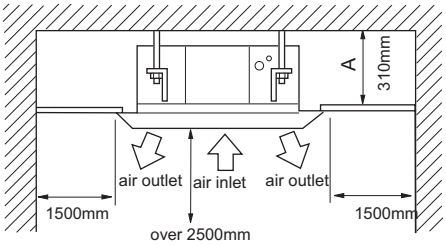

AB18~AB48:

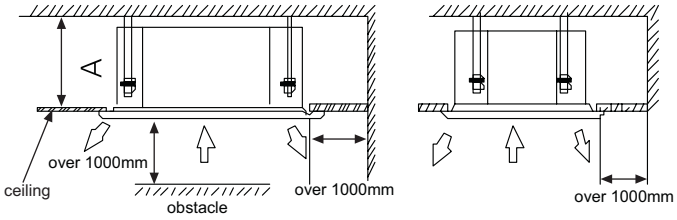

model	A(mm)
AB072~AB162	310
AB182~AB282	280
AB322~AB482	320

(3) Position among ceiling opening, unit and suspending bolt

Model: AB072~162:

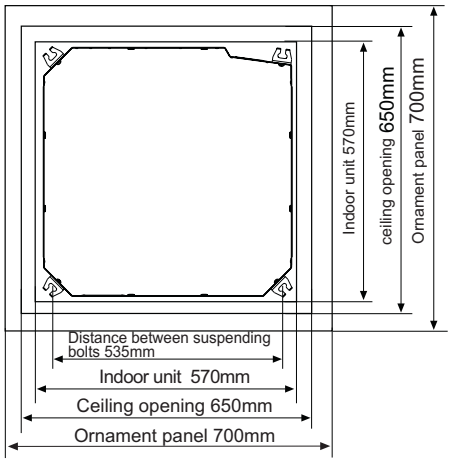

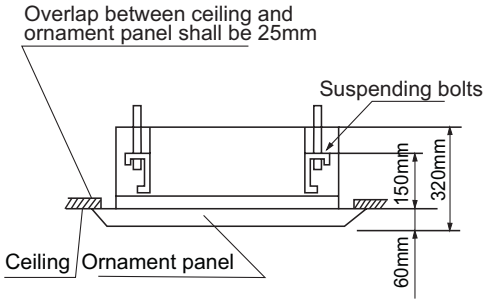

Model: AB182~282:

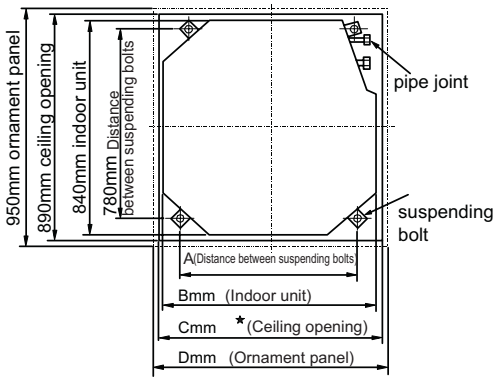

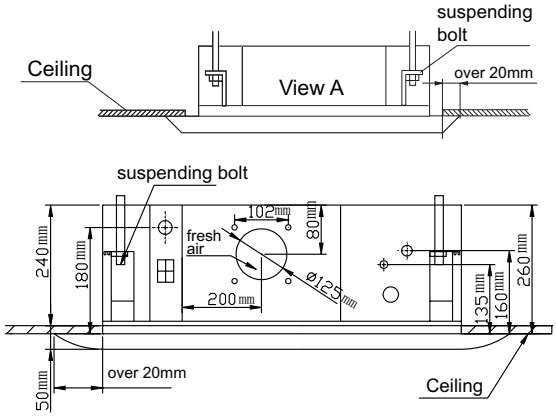

model	A	B	C	D
AB182~282	680	840	890	D

Note:
The dimension marked with ★ can be up to 910mm, but the overlap distance should be over 20mm.

Model: AB322~482:

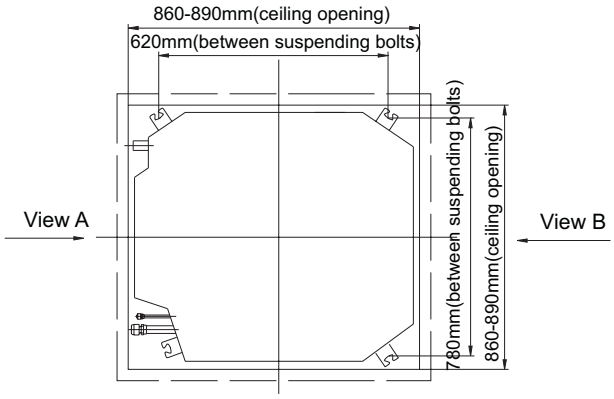

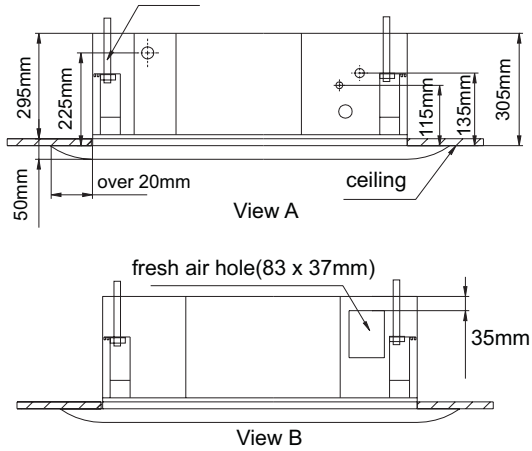

Note:

- Before hanging indoor unit, decide the installation position and the pipe direction due to the piping and the wiring in the ceiling.
- Before hanging indoor unit, firstly prepare all the pipes(refrigerant pipe and drainage pipe) and the wires(remote controller wire, connecting wire between indoor and outdoor), in order to connect with the indoor at once after installation.
  If the ceiling is existing, before hanging, place the refrigerant pipe, drainage pipe, indoor wires, controller wires on the prepared position.
- Confirm indoor dimension. For the unit with installation paper pattern, use the paper pattern to make the dimension and the position of the unit and the ceiling ceiling opening identical when installation.

(4) The ceiling opening and reinforcement

A. According to indoor dimension, cut down and take away the ceiling base plate.

B. After making the proper installation hole, reinforce the cut surface of ceiling base plate, and modify the ceiling edge to consolidate the base plate. To avoid ceiling vibration, it is important to consolidate the base plate and keep the original level.

(5) Install the suspending pole

- To bear the unit, in the place with existing ceiling, use the foundation bolt; while in the place with new bulit ceiling,use the built-in bolt, embedded bolt or other parts supplied on field.Before installation, adjust the distance to the ceiling.
- Fix the unit with M10 suspending pole (4 pieces,prepared on field) as the showed dimension in the figure. Execute the proper installation due to the different room structure and keep horizontal with th gradienter.

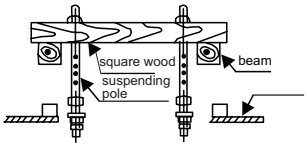

New concrete slab

To fix with built-in parts, foundation blots, etc.

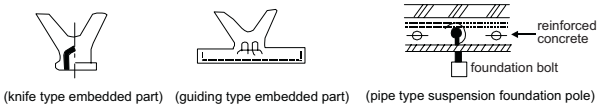

Original concrete slab

Use hole-in hinge, hole-in plunger or hole-in bolt.

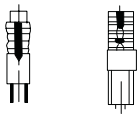

Steel reinforcement structure

Use angle steel or new supporting angle steel directly.

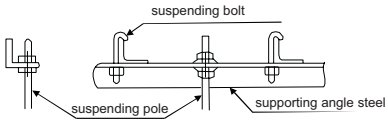

Hanging indoor unit

Adjust the screw cap (lower) position, and keep the distance between washer (lower) and the ceiling is Hmm, as the table:

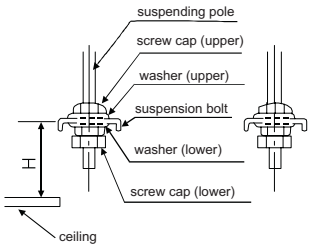

model	H(mm)
KMR-22~45Q/520B	150
KMR(d)-56~80Q/520B	135
KMR(d)-90~140Q/520B	150

(6)Indoor unit installation

In case of no ceiling

A. Install unit temporarily

Put suspending bracket on the suspending bolt to hang the unit up. Be sure to use nut and washer at both end of the breaket to secure firmly.

B. Ceiling opening hole dimension, refer to the figure on Page 54.

After installation on the ceiling

C. Adjust unit to its right position

D. Check if the unit is horizontal.

The unit is with built-in water pump and float switch,check if the four corners of the unit are horizontal with the gradienter or the PVC tube with water. (If unit is tilting against the direction of water drainage, float switch will be abnormal and cause water drop).

E. Fasten the nut up on the washer.

In the case of existing ceiling

F. Install unit temporarily

Put suspending bracket on the suspending bolt to hang the unit up.Be sure to use nut and washer at both end of the bracket to secure it firmly.

G. Adjust the height and position of the unit.

H. Proceed the procedure D, E of " In the case of no ceiling "

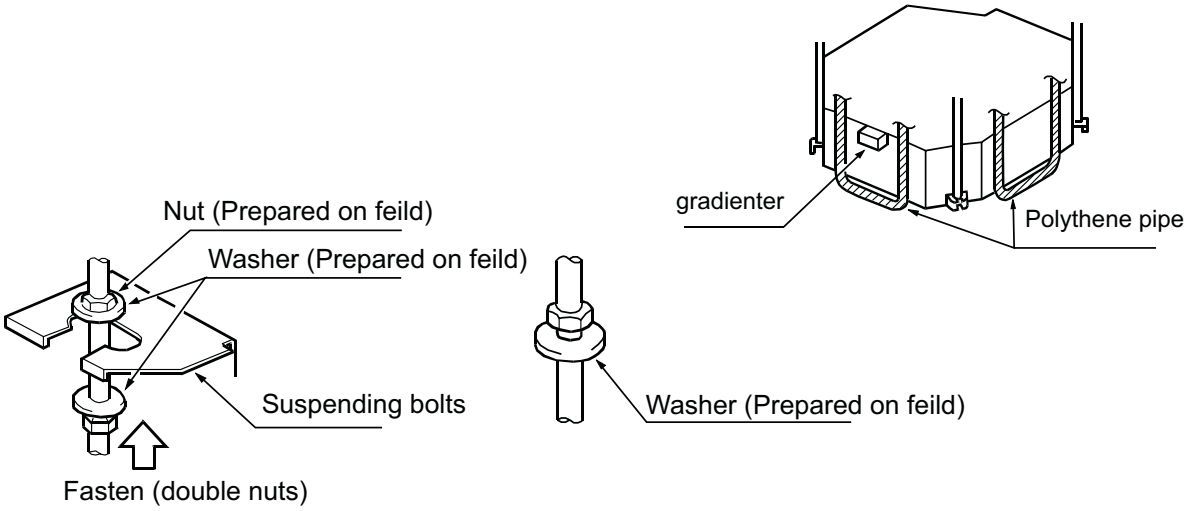

Fix the suspending bolt firmly

Fix the washer firmly

(7) Ornament panel installation

A. Preparing and handling with ornament panel

- Ornament panel shall not be placed face down or against wall, neither on an uneven object.
- Don' t bend carelessly the swing flap, or problem may occur.

AB072~AB162:

1. Remove air inlet grille and push down the two bars on the inlet grille (see figure 1), move it close to the grille and then lift it up for 45degree (see figure 2), and take off the air inlet grille.

2.Take off the filter and press the air inlet grille outer edge with thumb, and pull out the filter corner with forefinger,to lift the filter after leaving the locker, then remove the filter(see figure 3).

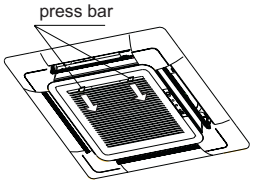

(figure 1)

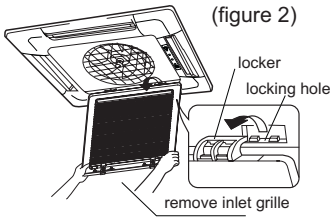

(figure 2)

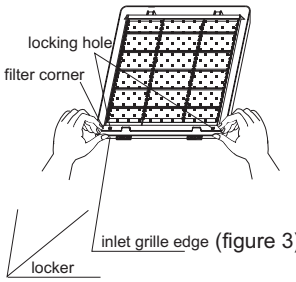

(figure 3)

AB182~AB482:

1.Open the grille

Press "PUSH" button, the inlet grille will open automatically (there are hooks on both sides of inlet grille,see figure 4).

2.Open the two hooks,see figure 5.

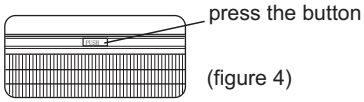

(figure 4)

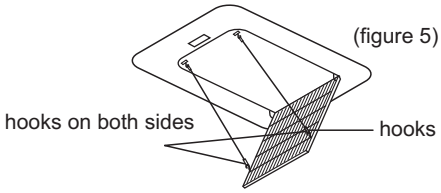

(figure 5)

3.Remove the air filter,see figure 6.

4.Remove air inlet grille,see figure 7.

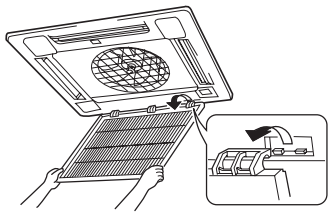

(figure 6)

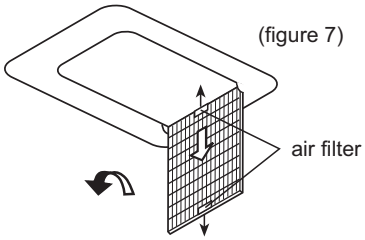

(figure 7)

pull down the white rod to take out the filter

B.Ornament panel installation on the indoor unit

1)AB072~AB162:

- Install the panel as the direction in the figure,if not, there will be air leakage; also the swing and receiver can not connect successfully.

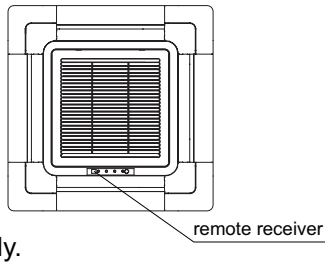

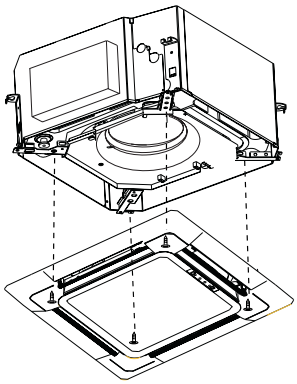

- Firstly fix the panel with screws temporarily.
- Fasten the two temporary screws and the other two screws.
- Connect the motor, the communication wire and the power cable, and check if the wiring is correct with a controller. After confirming the unit can run normally, install the air inlet grille, corner cover, etc.

2)AB182~AB482:

Shown as figure 1, put the swing motor on the ornament panle and the pipe on the unit at the same position, then install the ornament panel on the indoor unit.

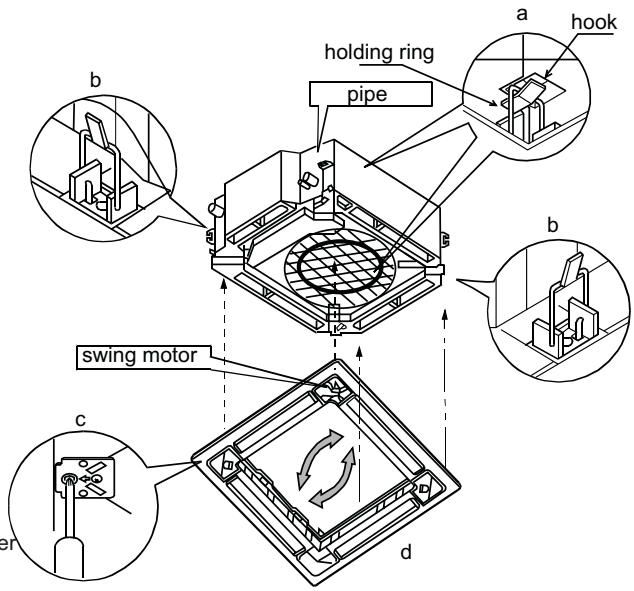

figure 1

Install the ornament panel

a. Place the holding ring on swing motor opposite side temporarily on hooks of the indoor unit. (2 pcs)

b. Put the other two holding rings on the hooks at both sides of the indoor unit temporarily. (Pay attention not to push wires of swing motor into seals).

c. Screw in all 4 screws under holding ring for about 15mm. (Panel will rise).

d. Adjust the ornament panel as per procedure d to cover the ceiling opening.

e. Tighten screws to reduce the thickness of seals between ornament and indoor unit to 5-8mm.

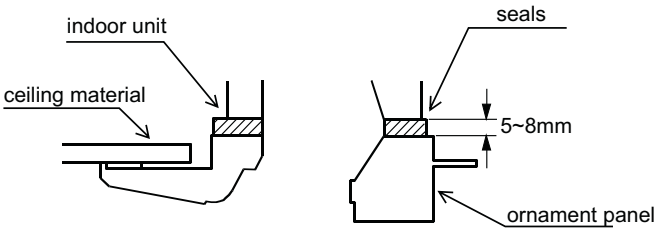

figure 2

Warning

If screws are not tighten properly, problems in Fig, 3 might occur.

If there are still space between ornament panel and ceiling, after tightening of screws, please readjust the height of indoor unit. (Refer to Fig. 4)

If indoor unit is horizontal and water drainage is smooth, then, indoor unit height can be adjusted through holes in corners of ornament panel.

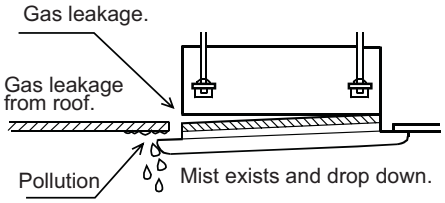

figure 3

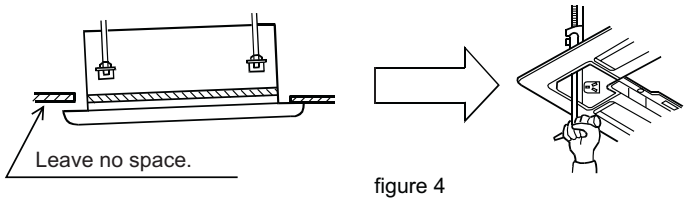

figure 4

Wiring of ornament panel

f. Connect the swing motor wires connectors on the ornament panel,see figure 5.

g. Connect the remote receiver port on the ornament panel.

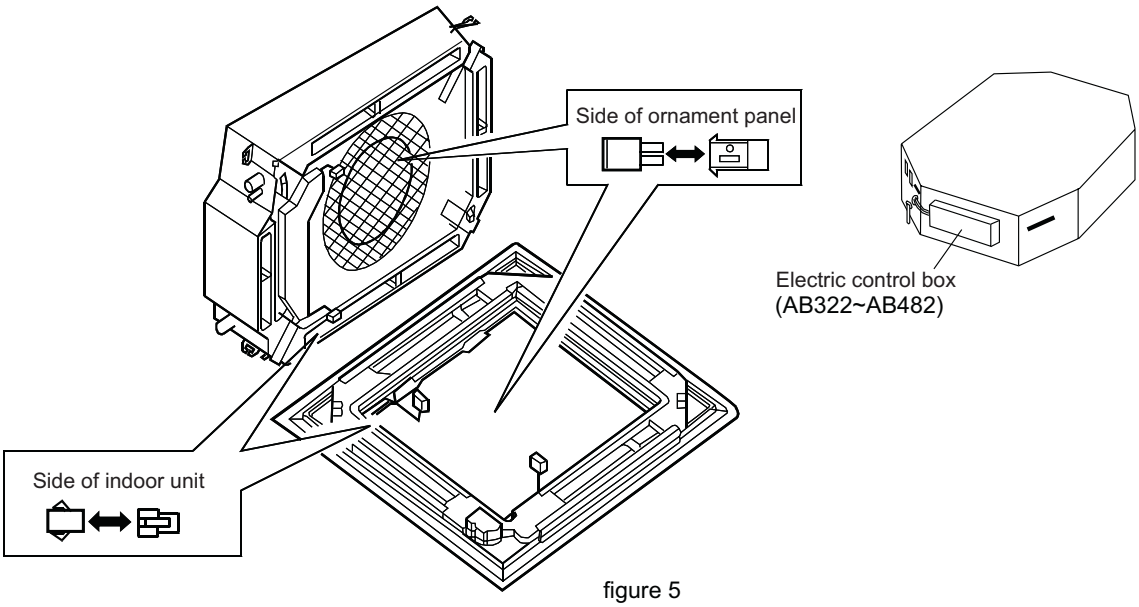

figure 5

C. Installation of inlet grille and corner cover

1) Installation of inlet grille
Install in opposite order of "Prepare ornament panel".
When installing inlet grille, pay attention to the swing motor wires not to be twisted.

2)For the model AB182~482, install the corner cover on the unit corner.

a. As shown in figure 6, tie the corner cover thread onto the bolt of ornament panel.

b. Fix the corner cover on the ornament panel,see firgure 7.

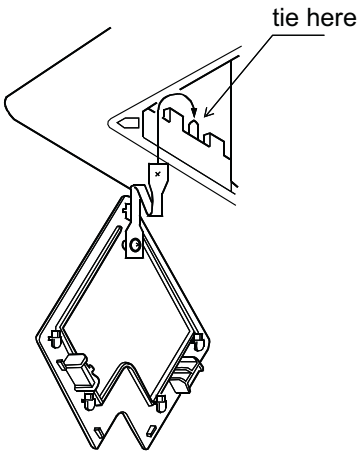

figure 6

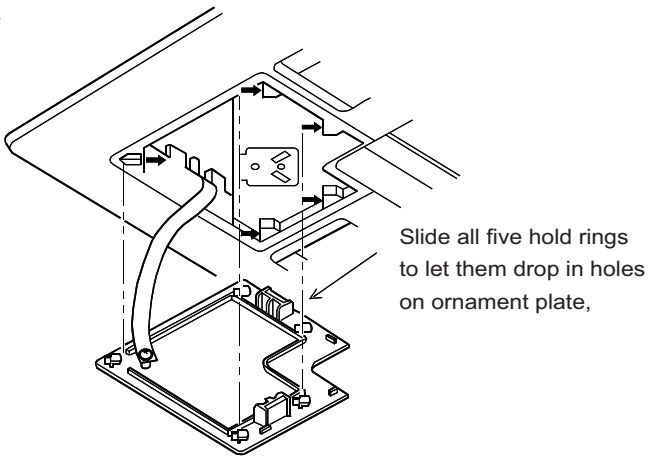

figure 7

D. Installation of drainage pipe

⚠ NOTE

- In order to normal drain, the drainage pipe should be specified as the installation manual. Otherwise, water drop will occur. Heat insulation is required.

Requirements:

- Indoor drainage pipe should be heat insulated.
- The connection section with indoor unit must be heat insulated. Improper heat insulation will cause dew.
- Drainage pipe is downgrade over 1/100, and the pipe should not be crooked, or noise will occur.
- The horizontal length should be no more than 20m. In case of long pipe, there should be support for every 1.5~2m to avoid unevenness.
- The central pipe is executed as the below figure.
- Take care not to put force to the drainage pipe connection section.

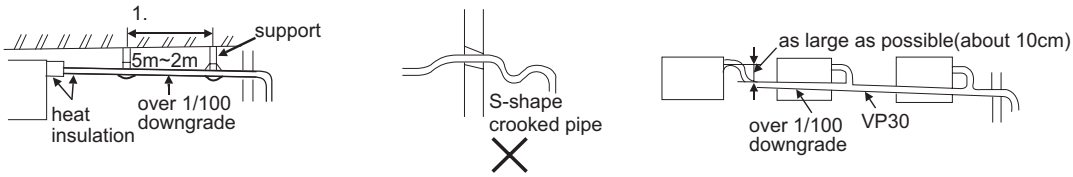

3)Material of pipe and heat insulation

In order to avoid causing dew, heat insulation should be dealt with at gas side and liquid side.

Pipe	Rigid PVC pipe VP31.5mm (internal diameter)
Insulation	Foamed PE with thickness above 7 mm

4) Hose

The hose is used for adjusting the accentricity and angle of the rigid PVC pipe.

- Directly stretch the hose to install without making any deformation.
- The soft end of the hose must be fastened with a hose clamp.
- Please apply the hose on horizontal part

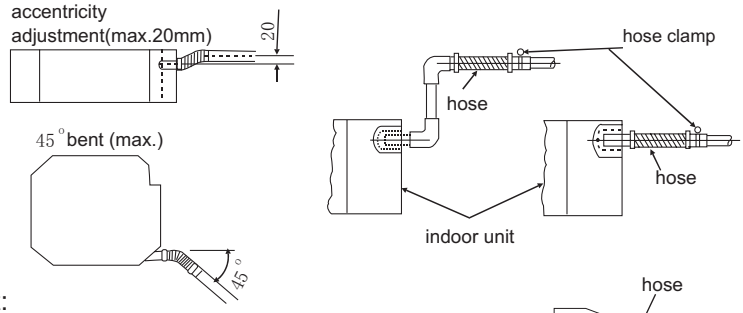

Insulation treatment:

- Wrap the hose and its clamp until to the indoor unit without any clearance with insulating material, as shown in the

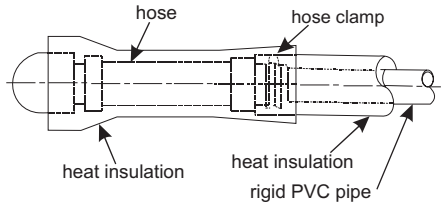

5) Drainage pipe elevation

Drainage pipe can be risen up 360mm.

When the downgrade can be sure, go down slope after being risen up.

6) Drain confirmation

During trial run, check that there is no leakage at the pipe connection part during water draining even in winter.

Inject 600cc water from the water pipe with the hose slowly, and not to spray on the pump motor.

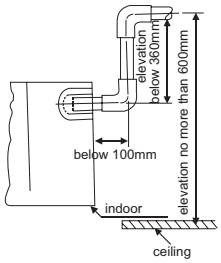

- After installing electirc system, set the unit in cooling mode, meanwhile charging water to check.
- If electric installation is not finished, pull out the float switch connector(2P).
  After confirming not leakage, connect the float switch connector, and the pump motor will run for another 5 minutes, then it will stop automatically.
- Confirm the motor noise
  Confirm the pump motor operation noise and check water drainage.

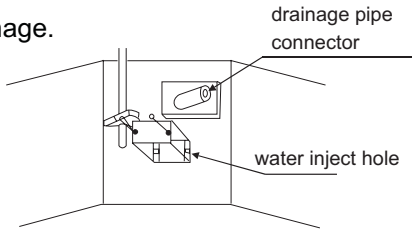

7) Allowable pipe length and drop

These parameters differ from the outdoor unit. See the instruction manual attached with the outdoor unit for details.

8) Pipe material and size

Pipe material	Phosphorus deoxidized copper seamless pipe (TP2) for air conditioner			
model		AB072~AB162	AB182~AB282	AB322~AB482
Pipe size (mm)	Gas side	∅12.70	∅15.88	∅19.05
	Liquid side	∅ 6.35	∅ 9.52	∅ 9.52

9) Recharge of refrigerant

The refrigerant recharge shall be performed as specified in the installation instructions. The adding procedure shall be aided with a measuring meter for a specified amount of supplemented refrigerant.

10)Refrigerant pipe connection

Conduct flared connection work to connect all refrigerant pipes.

- The connection of indoor unit pipes must use double spanners.
- The installing torque shall be as given in the following table.

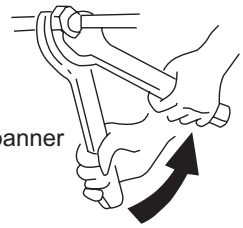

Connecting pipe O.D.(mm)	Installing torque (N-m)	Additional installing torque (N-m)
∅ 6.35	11.8(1.2kgf-m)	13.7(1.4kgf-m)
∅ 9.52	24.5(2.5kgf-m)	29.4(3.0kgf-m)
∅ 12.70	49.0(5.0kgf-m)	53.9(5.5kgf-m)
∅ 15.88	78.4(8.0kgf-m)	98.0(10.0kgf-m)
∅ 19.05	98.0(10.0kgf-m)	117.7(12.0kgf-m)

Cut pipe and expand pipe

When pipe is too long or flared pipe is damaged, the intaller will cut pipe or expand pipe.

Evacuation

Evacuate from the stop valve with vacuum pump, and must not discharge the refrigerant in the outdoor directly.

Open all valves

Open all valves, but when only one master unit is running, the oil equalization valve should close.

Leakage checking

Check if there is leakage on the pipe connection and the valve cap with a leakage detector or soap water.

Wiring method

ring terminal wiring:

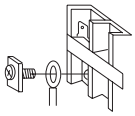

1.Ring terminal wiring:

The wiring method is as the above figure, take off the screw, lead the screw through the ring terminal, then press it in the terminal block to fasten the screw.

2.Straight terminal wiring

Loose the screw, put the wire end into the terminal block, then fasten the screw, pull out the wire to confirm if the wire is fixed firmly.

3.Pressing method of connection wire

After wiring, press the connection wire at the wire sleeve firmly with pressing clip, as the figure:

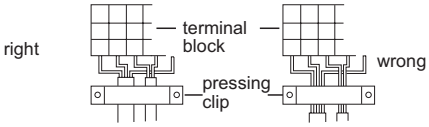

3.2.3 Wall mounted unit installation

The manual can not include all cases, if you have new request and question, please contact Haier local distributor.

The standard accessories of this series refer to the packing list with the unit, while the other admired parts will be prepared by the clients.

(1) Select installation position

The indoor unit shall be installed at locations where cold and hot air could evenly circulated.

The following locations should be avoided:

Places with rich salt (seaside area).

Places with plenty of gas sulfides (mainly in warm spring areas where the copper tube and braze weld is easy to corrosion).

Locations with much oil (including mechanical oil) and steam.

Locations using organic solvents.

Places where there are machines generating HF electromagnetic waves.

Positions adjacent to door or window in contact with high-humidity external air. (Easy to generate dew).

Locations frequently using special aerosols.

Indoor unit installation space:

A. The distance between air outlet and the floor should be no more than 2.7m. Outdoor installation height should be no less than 2.5m.

B. Select suitable places the outlet air can be sent to the entire room,and convenient to lay out the connection pipe, connection wire and the drainage pipe to outdoor.

C. The ceiling structure must be strong enough to support the unit weight.

D. The connecting pipe, drain pipe and connection wire shall be able to go though the building wall to connect between the indoor and outdoor units.

E. The connecting pipe between the indoor and outdoor units as well as the drain pipe shall be as short as possible.

F. If it's necessary to adjust the refrigerant charging, please refer to the installation manual attached with the outdoor unit.

G. The unit should be installed close to the plug. There should be enough space around the unit.

H. Below the unit please do not place the TV, device, artist, piano, radio, etc. to avoid being damaged by the condensate.

(2)After selecting the installation place, proceed the following procedures:

Drill a hole in the wall, and let the connection pipe and the wires through the wall with the PVC pipe purchased locally. The hole should be downward to the outside for at least 1/100 gradient. Before drilling, check and confirm there is no pipe or reinforced concrete behind the hole to avoid damaging the wire or the pipe.

(3)Indoor installation figure:

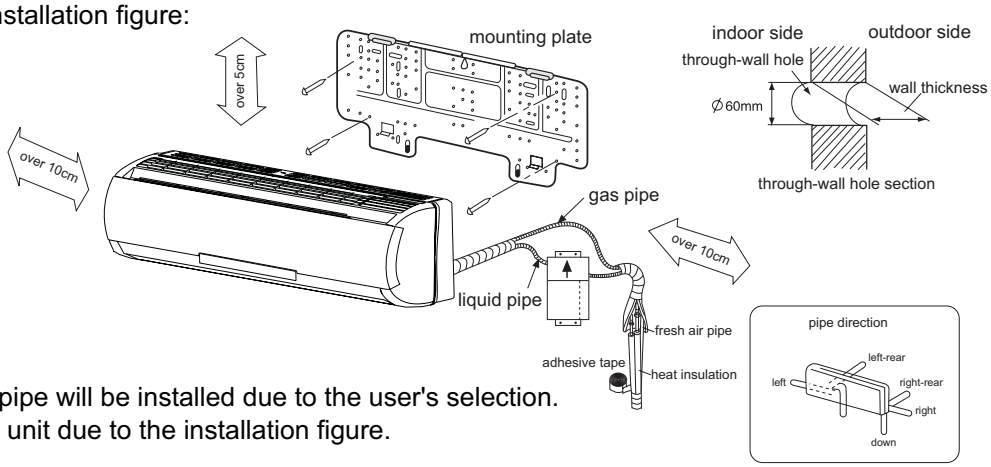

Fresh air pipe will be installed due to the user's selection.

Install the unit due to the installation figure.

(4) Installation procedure

A. Fix the mounting plate and locate through-wall hole

According to the indoor installation place and the pipe direction, fix the mounting plate.

Install the unit on the flat wall under the beam or beside the pole, firstly fix the mounting plate on the wall with a screw.

Confirm the horizon with a gradienter.

Fix the plate with the concrete screw,(if fixing with the expansion screw, firstly drill holes in the wall at the plate position with a driller (diameter 4.8mm), then put the plastic sleeve into the hole, and hang the mounting plate on the wall with 4*25 screws), measure the through-wall hole position A with the tapeline.

B. Drill through-wall hole and install hole cover. Drill a hole with diameter 60mm, and the outside is downword slightly. Install the hole cover and seal it with the plaster powder or the putty.

C. Indoor pipe layout

According to the installation place of indoor/outdoor and the through-wall hole, lay the connection pipe, drainage pipe, connection wire, communication wire and fresh air pipe. The drainage pipe is lower, and the connection wire is upper, the power cable and the connection wire can not twist each other, the drainage pipe should be treated with the heat insulation.

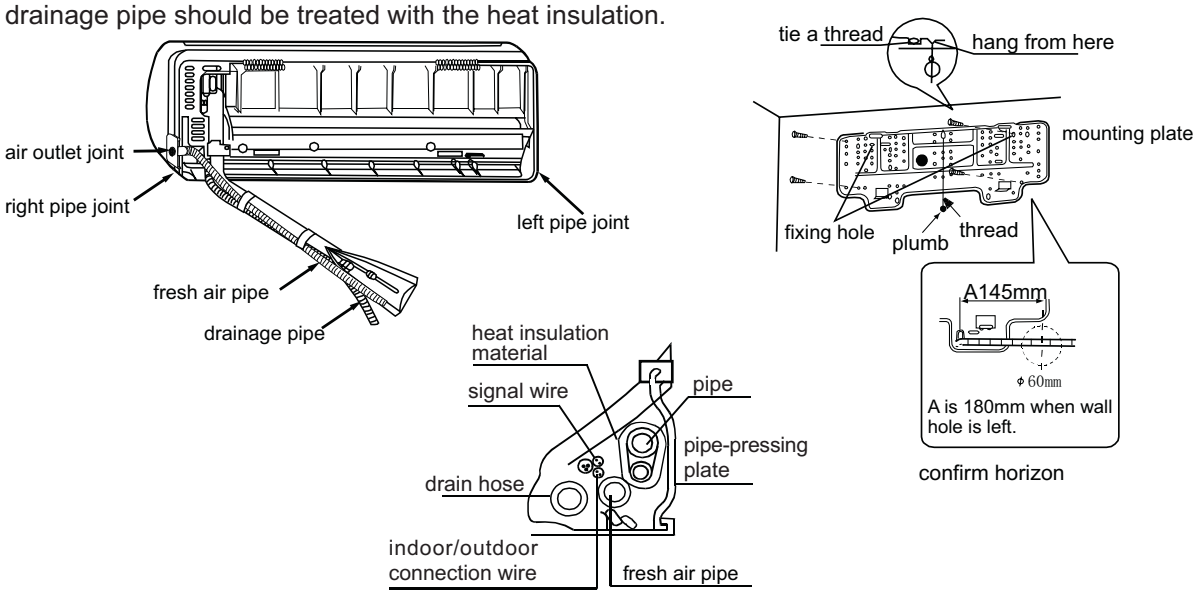

D. Connecting pipe

Thread the connection pipe (liquid/gas pipe) and the connection wire through the wall hole from outside, or after finishing the indoor pipe and wire connection, thread the pipe and wire through the wall hole from inside.

E. Allowable pipe length and drop

These parameters differ from the outdoor unit. See the instruction manual attached with the outdoor unit for details.

F. Pipe material and size

NOTE: AS182 gas pipe/liquid pipe is ∅12.7mm/∅6.35mm when out of factory, but when it connects with outdoor, it will need the changing pipe ∅15.88mm/∅9.52mm.

model		AS072~AS162	AS182
Pipe size (mm)	Gas side	∅12.70	∅15.88
	Liquid side	∅ 6.35	∅ 9.52
Pipe material	Phosphorus deoxidized copper seamless pipe (TP_2)		

G. Recharge of refrigerant

The refrigerant recharge shall be performed as specified in the installation instructions. The adding procedure shall be aided with a measuring meter for a specified amount of supplemented refrigerant.

H. Refrigerant pipe connection

Conduct flared connection work to connect all refrigerant pipes.

- The connection of indoor unit pipes must use double spanners.
- The installing torque shall be as given in the following table.

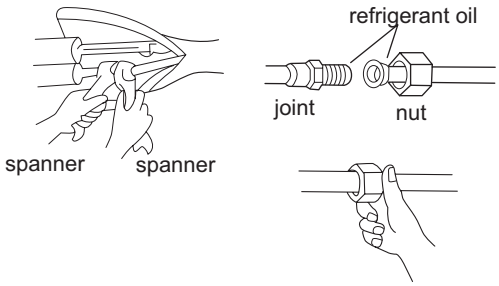

Connecting pipe O.D.(mm)	Installing torque (N-m)	Additional installing torque (N-m)
∅ 6.35	11.8(1.2kgf-m)	13.7(1.4kgf-m)
∅ 9.52	24.5(2.5kgf-m)	29.4(3.0kgf-m)
∅ 12.70	49.0(5.0kgf-m)	53.9(5.5kgf-m)
∅ 15.88	78.4(8.0kgf-m)	98.0(10.0kgf-m)
∅ 19.05	98.0(10.0kgf-m)	117.7(12.0kgf-m)

Cut pipe and expand pipe

When pipe is too long or flared pipe is damaged, the intaller will cut pipe or expand pipe.

Evacuation

Evacuate from the stop valve with vacuum pump, and must not discharge the refrigerant in the outdoor directly.

Open all valves

Open all valves, but when only one master unit is running, the oil equalization valve should close.

Leakage checking

Check if there is leakage on the pipe connection and the valve cap with a leakage detector or soap water.

Wiring method

ring terminal wiring:

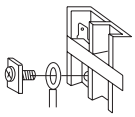

1.Ring terminal wiring:

The wiring method is as the above figure, take off the screw, lead the screw through the ring terminal, then press it in the terminal block to fasten the screw.

2.Straight terminal wiring

Loose the screw, put the wire end into the terminal block, then fasten the screw, pull out the wire to confirm if the wire is fixed firmly.

3.Pressing method of connection wire

After wiring, press the connection wire at the wire sleeve firmly with pressing clip, as the figure:

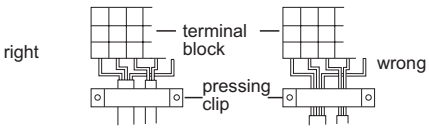

(5) Indoor installation and taking down

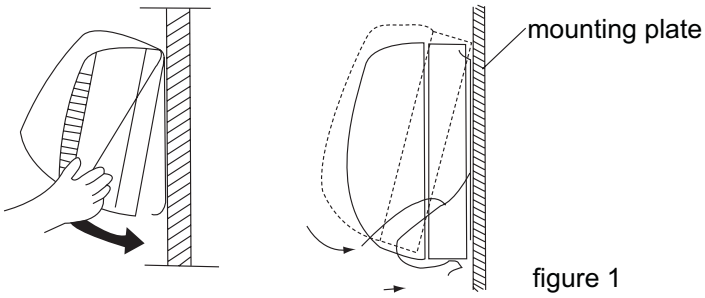

figure 1

1) Installation explanation

When installing indoor unit, firstly fix the mounting plate on the wall, then fix the unit on the hook on top of mounting plate, press the unit and sound "pa""pa". At this time, indoor unit agraffe has hung on the mounting plate, as figure 1.

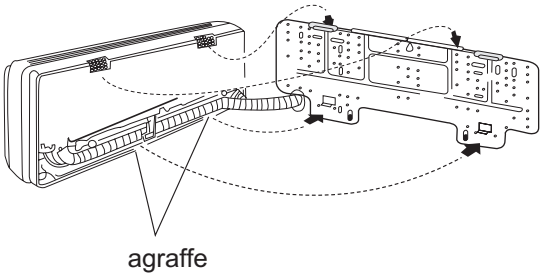

figure 2

2) Taking down the unit

When taking down the indoor, as figure 3, press upwards the indoor agraffe to let it remove, then lift up the indoor to leave the agraffe, as figure 4.

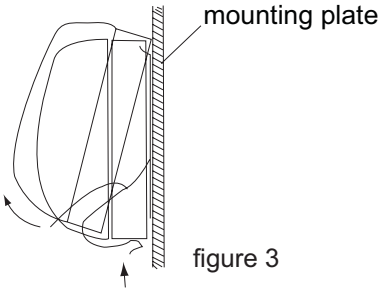

figure 3

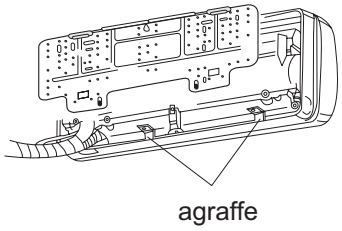

figure 4

(6)Electric control assembly installation (including EEV)

A. Installation dimension:

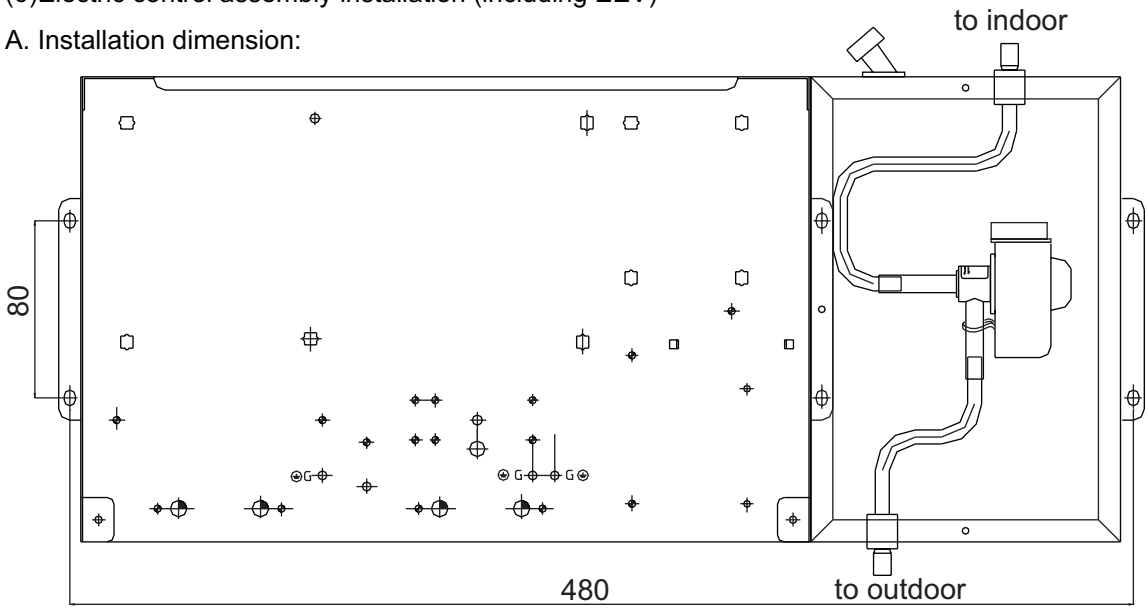

B. Installation procedure:

A. Select installation position, fix electric control box; the distance between electric control box and indoor can not be more than 1.5m (the total wire length is 2.0m, including the wire in electric control box);

B. Connect the liquid pipe from EEV to indoor unit;

C. Connect the wiring between indoor and electric control box correctly, the detailed method refers to the wiring diagram.

3.2.4 Med ESP duct installation

(1) Before installation

- Confirm the way to move the unit to the installation place.
- Before moving the unit to the installation place, do not remove their packages.
  When have to remove the package, use a soft material or protection board with rope to lift the unit assembly to avoid unit damage or bumping a scrape.

(2) Choose installation place

A. The chosen installation place should meet the following requirements and get the user's agreement.

- Place ensures ideal airflow distribution.
- The passage of airflow has no obstacles.
- When importing outside air, it should be imported directly from outdoors. (if the pipe can not be extended, it also can not be imported from top)
- Place ensures enough space for maintenance.
- The pipe length between indoor and outdoor unit is in the permitted limit (referring to outdoor unit installation part).
- The indoor unit, outdoor unit, electric wire and connection wire is at least 1m away from television and radio. This is to avoid the image disturbance and noise caused by the above-mentioned home appliance. (Even if 1m away, if the electromagnetic wave is too strong, it can also cause noise.)

B. The height of ceiling

The indoor unit can install on the ceiling, which height is no more than 3m.

C. Install the unit with suspending pole. Check if the installation place can bear the unit.

If not certain, strengthen it before installing the unit.

AD322~482: A=1720

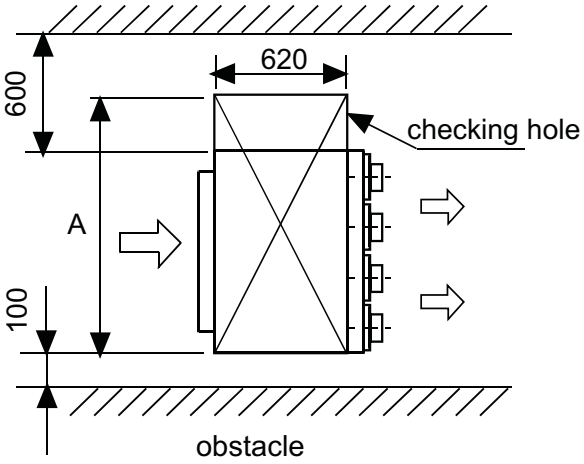

Installation space (unit:mm)

(3) Indoor installation

A. The relationship among the ceiling checking hole, the unit and the suspension pole (unit: mm)

Note: the unit is with water pump.

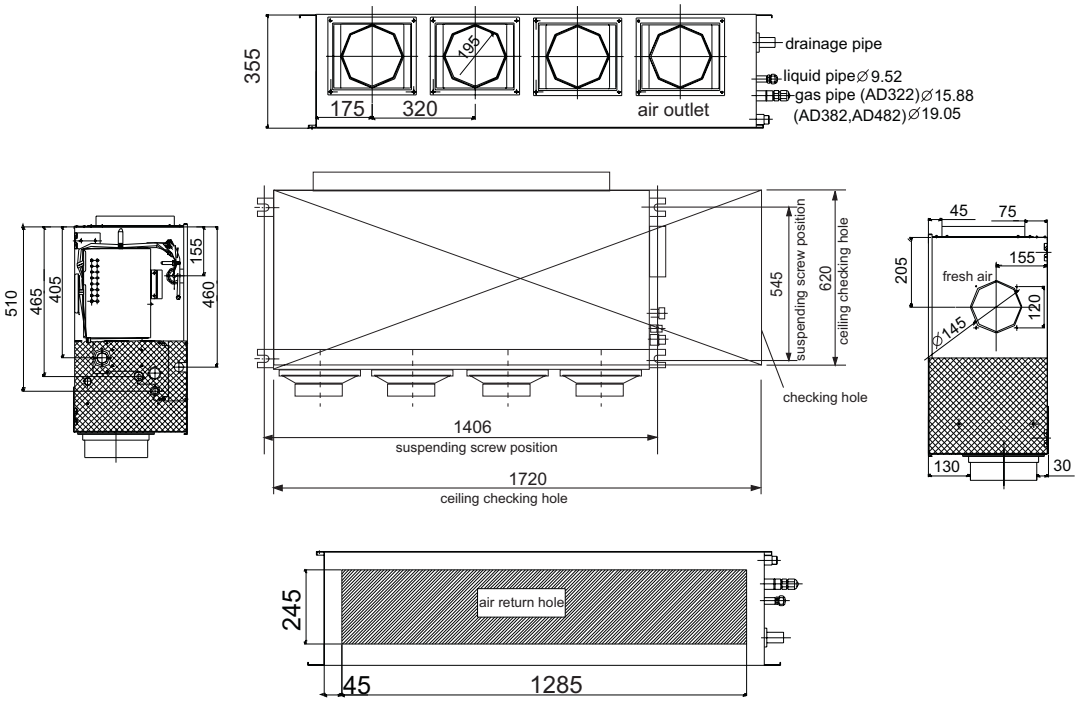

AD322~AD482

B. If necessary, prepare all the needed installation and checking hole on the ceiling (with existing ceiling)

- Before installation, prepare all the pipes (refrigerant, drainage) and wire (wire controller connection wire, indoor and outdoor unit connection wire) connected with indoor , so that after installation, they can be immediately connected with indoor.
- Cut the opening on the ceiling. Maybe it needs to strengthen the ceiling to keep the ceiling even and flat and prevent the ceiling from vibration. For details, please consult the builder.

C. Suspending bolts installation

(Use M10 screw bolt)

To bear the unit, in the place with existing ceiling, use the foundation bolt; while in the place with new bulit ceiling,use the built-in bolt, embedded bolt or other parts supplied on field.Before installation, adjust the distance to the ceiling.

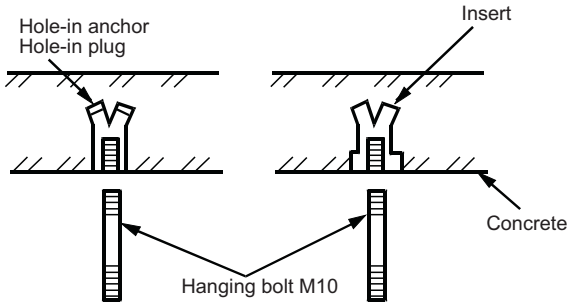

D. Installation of indoor unit

Fix the indoor unit to the suspending bolts.
If necessary, it is possible to suspend the unit to the beam, etc.
Directly use the suspending bolts instead of the suspending screws.

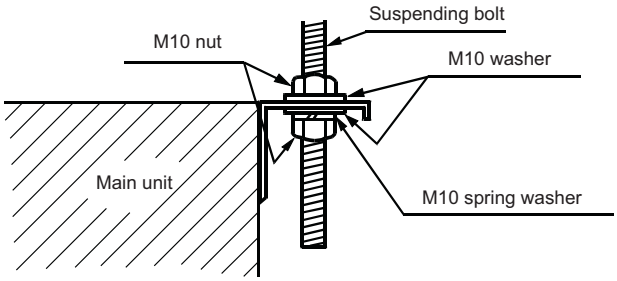

Note

When the dimensions of main unit and ceiling holes does not match, it can be adjusted with the slot holes of hanging bracket.

Adjusting to the horizon

Adjust the horizon with a gradienter or by the following method. Make adjustment so that the relation between the lower surface of the unit and water level in the hose becomes what is in the figure.

Unless the adjustment to the horizon is made properly, failure of the float switch may occur.

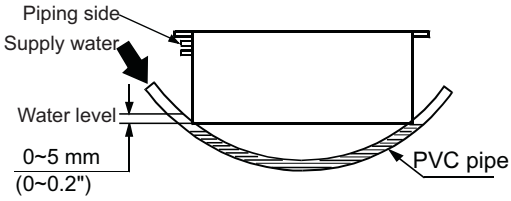

make the piping side slightly lower.

Fan speed selection (when useing high efficient filter)

The fan motor composes red terminal and white terminal, which has been set at standard position when out of factory. When the static pressure is increased for using high efficient filter, you can change the connector position on the side of electric control box.

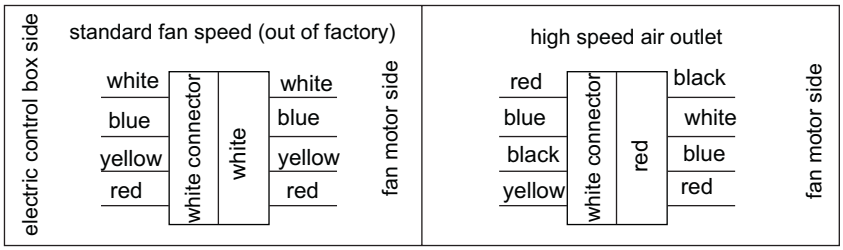

Static pressure, unit: Pa

standard	max.
50	96

(4) Drain Piping

a. Drain piping should always be in a downhill grade (1/50~1/100) and avoid riding across an elevation or making traps.

● **Good piping**

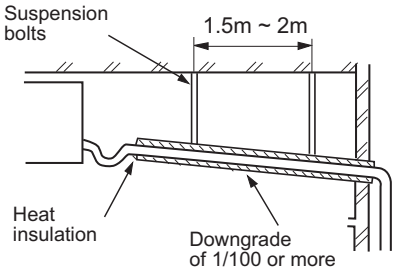

● **Improper piping**

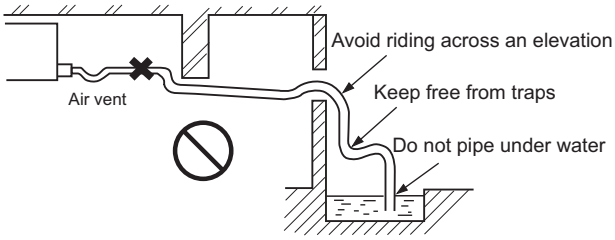

b. When connecting the drain pipe to unit, pay suffcient attention not to apply excess force to the piping on the unit side. Also, fix the piping at a point as close as possible to the unit.

c. For drain pipe, use hard PVC general purpose pipe VP-25(I.D.1") which can be purchased locally. When connecting, insert a PVC pipe end securely into the drain socket before tightening securely using the attached drain hose and clamp. Adhesive must not be used connection of the drain socket and drain hose (accessory).

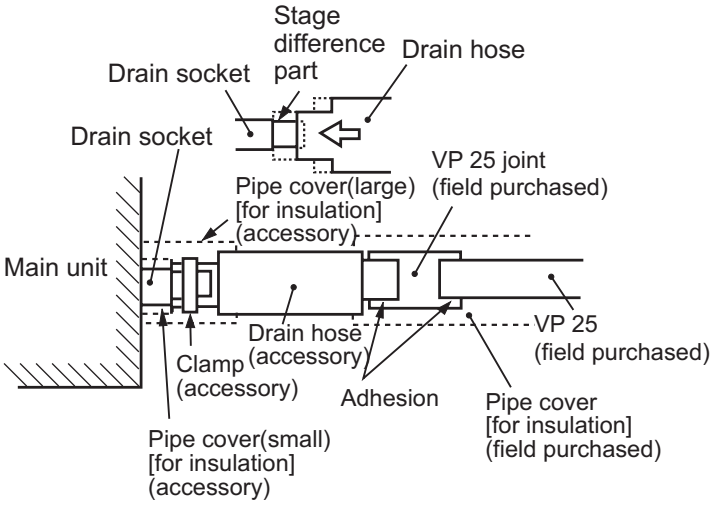

d. When constructing drain piping for several units, position the common pipe about 100 mm below the drain outlet of each unit as shown in the sketch. Use VP-30(11/4") or thicker pipe for this purpose.

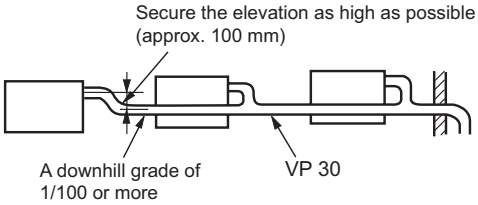

e. The stiff PVC pipe put indoor side should be heat insulated.

f. The water pipe should be rised up within 500mm above the ceiling. When there is obstacle above the ceiling, adopt the bracket for water pipe to round the obstacle. When the extending height is higher than 500mm, the water return volume will be too much to cause drain pan overflow. So drainage pipe height should be in the range shown in the below figure.

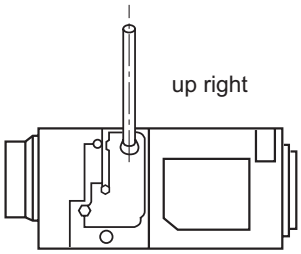

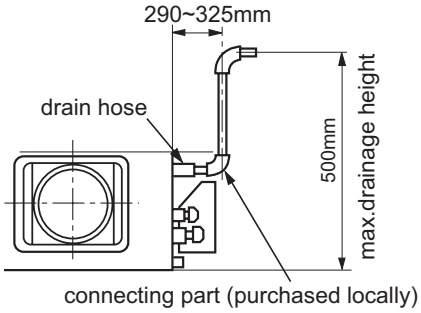

g. Avoid putting the outlet of drain hose in the places with irritant gas generated. Do not insert the drain hose directly into drainage, where the gas with sulfur may be generated.

(5) Drainage Test

a. Conduct a drainage test after completion of the electrical work.
b. During the trial, make sure that drain flows properly through the piping and that no water leaks from connections.
c. In case of a new building, conduct the test before it is furnished with the ceiling.
d. Be sure to conduct this test even when the unit is installed in the heating season.

(6) Procedures

a. Supply about 1000 cc of water to the unit through the air outlet using a water feeding pump.
b. Check the drain while cooling operation.

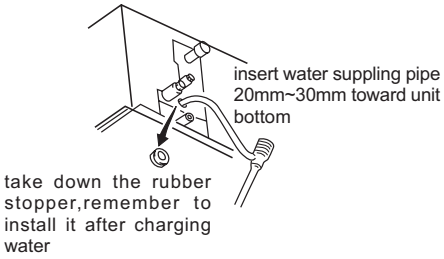

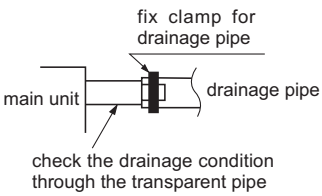

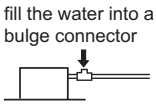

When the electric installation has not been finished, install a bulge connector on the drainage pipe to supply a water inlet. Then if there is water leaking from the pipe, check the system until the water can flow normally.

(7) Installation of air return duct and discharging duct

Please consult the after-sales service worker of Haier Air Conditioner for the choosing and installation of air inlet, air inlet duct, discharging outlet and discharging duct. Calculating the design drawing and outer static pressure, and choose the discharging duct with proper length and shape.

- The length difference among every duct is limited below 2:1.
- Reduce the length of duct as possible as can.
- Reduce the amount of bend as possible as can.
- Use heat insulation material to wrap the flange part between main unit and air discharging duct. Perform duct installation before the ceiling decoration.

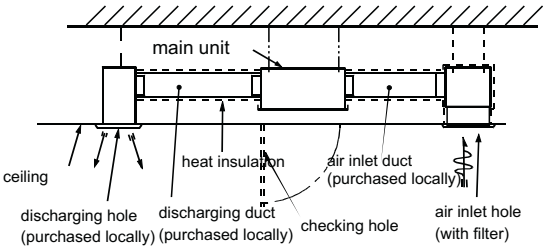

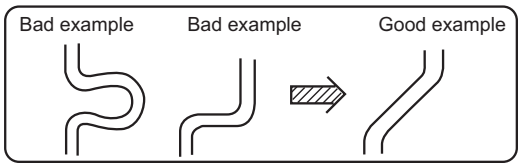

(8) Connection of air return duct and discharging duct

(a) fresh air inlet (from single side)

Air inlet from side plate or from air return duct

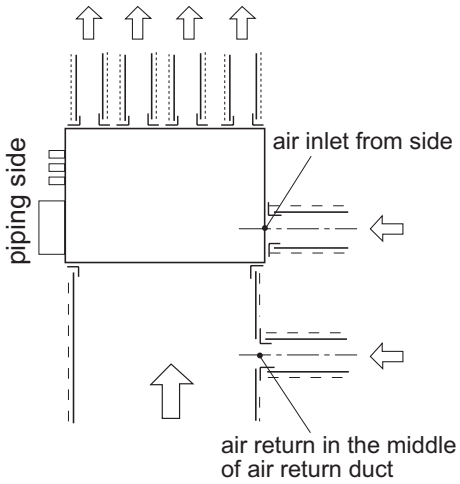

(b) discharging duct

Discharging from side plate (combined with air return duct)

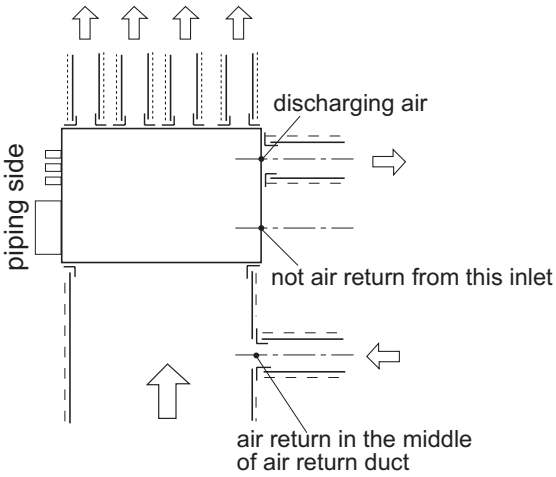

(c) Duct must be heat insulated to avoid causing dew.

(9)Cautions for air return duct and discharging duct installation

- Suggest the duct with against-dew and noise absorbing material. (purchased locally)
- Finish duct installation before ceiling decoration.
- Duct must be heat insulated.
- Special discharging duct should be in the place where air can be distributed reasonably.
- Checking hole must be pre-set in the ceiling for easy checking and maintenance.

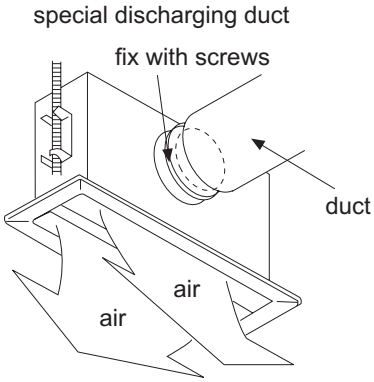

(10) Improper installation examples

- Without air return duct, take the ceiling inside as the duct. It will cause large humidity for nonregular air, strong wind, sunshine, etc.
- Water will drop from the outside of duct. For the new building with concrete, the humidity will be great, even through not taking the ceiling inside as the duct, so the duct should be with heat insulation.
- Exceed the unit operation range (e.g.: indoor DB 35degree, WB 24degree), which will result in compressor overload.
- Affected by the fan, strong wind and air direction, etc, when the unit air velocity exceeds the allowable limitation, the heat exchanger discharging water will overflow to cause water leakage.

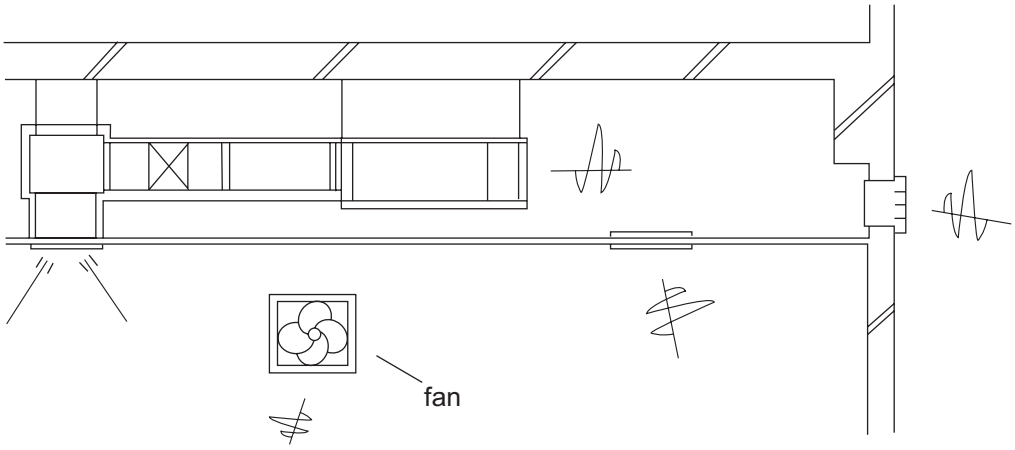

improper example

A. Allowable pipe length and drop

These parameters differ from the outdoor unit. See the instruction manual attached with the outdoor unit for details.

B. Material of pipe and heat insulation

In order to avoid causing dew, heat insulation should be dealt with at gas side and liquid side.

Pipe	Rigid PVC pipe VP31.5mm (internal diameter)
Insulation	Foamed PE with thickness above 7 mm

C. Pipe material and size

Pipe material	Phosphorus deoxidized copper seamless pipe (TP_2) for air conditioner		
model		AD322	AD382~AD482
Pipe size (mm)	Gas side	∅15.88	∅19.05
	Liquid side	∅ 9.52	∅ 9.52

D. Recharge of refrigerant

The refrigerant recharge shall be performed as specified in the installation instructions. The adding procedure shall be aided with a measuring meter for a specified amount of supplemented refrigerant.

E. Refrigerant pipe connection

Conduct flared connection work to connect all refrigerant pipes.

- The connection of indoor unit pipes must use double spanners.
- The installing torque shall be as given in the following table.

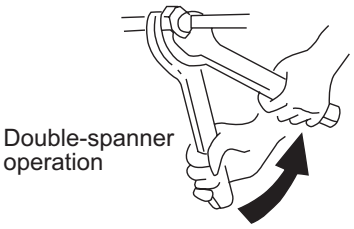

Connecting pipe O.D.(mm)	Installing torque (N.m)
∅ 9.52	32.7~39.9
∅ 15.88	78.4~98.0
∅ 19.05	97.2~118.6

Cut pipe and expand pipe

When pipe is too long or flared pipe is damaged, the intaller will cut pipe or expand pipe.

Evacuation

Evacuate from the stop valve with vacuum pump, and must not discharge the refrigerant in the outdoor directly.

Open all valves

Open all valves, but when only one master unit is running, the oil equalization valve should close.

Leakage checking

Check if there is leakage on the pipe connection and the valve cap with a leakage detector or soap water.

Wiring method

1.Ring terminal wiring:

The wiring method is as the above figure, take off the screw, lead the screw through the ring terminal, then press it in the terminal block to fasten the screw.

2.Straight terminal wiring

Loose the screw, put the wire end into the terminal block, then fasten the screw, pull out the wire to confirm if the wire is fixed firmly.

3.Pressing method of connection wire

After wiring, press the connection wire at the wire sleeve firmly with pressing clip, as the figure:

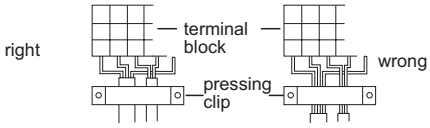

11) Duct design and installation

A. Count the necessary static pressure for air sending duct and air return duct and select proper model due to static pressure.Forbidden to take the MED ESP unit as the Low ESP unit or use the unit without duct.

B. Air sending duct and air return duct should be heat insulated.

C. Forbidden to get air return from the ceiling directly.

D. Adopt air return from indoor, and forbidden air return from corridor.

E. Forbidden to use the duct unit as the fresh air motor.

F. The selection of indoor air sending/return duct should consider the indoor air distribution. Air sending hole and air return hole should be a distance to avoid the short circuit.Meanwhile air outlet position and direction should consider the cooling/heating effect and avoid the hot air can blow down because of the air outlet too high.

3.2.5 High static pressure duct installation

(1) Before installation

- Confirm the way to move the unit to the installation place.
- Before moving the unit to the installation place, do not remove their packages.
  When have to remove the package, use a soft material or protection board with rope to lift the unit assembly to avoid unit damage or bumping a scrape.

(2) Choose installation place

A. The chosen installation place should meet the following requirements and get the user's agreement.

- Place ensures ideal airflow distribution.
- The passage of airflow has no obstacles.
- When importing outside air, it should be imported directly from outdoors. (if the pipe can not be extended, it also can not be imported from top)
- Place ensures enough space for maintenance.
- The pipe length between indoor and outdoor unit is in the permitted limit (referring to outdoor unit installation part).
- The indoor unit, outdoor unit, electric wire and connection wire is at least 1m away from television and radio. This is to avoid the image disturbance and noise caused by the above-mentioned home appliance. (Even if 1m away, if the electromagnetic wave is too strong, it can also cause noise.)

B. The height of ceiling

The indoor unit can install on the ceiling, which height is no more than 3m.

C. Install the unit with suspending pole. Check if the installation place can bear the unit.

If not certain, strengthen it before installing the unit.

(3) Indoor installation

A. The relationship among the ceiling checking hole, the unit and the suspension pole (unit: mm)

Note: the unit is with water pump.

AD18~AD482MHAHA

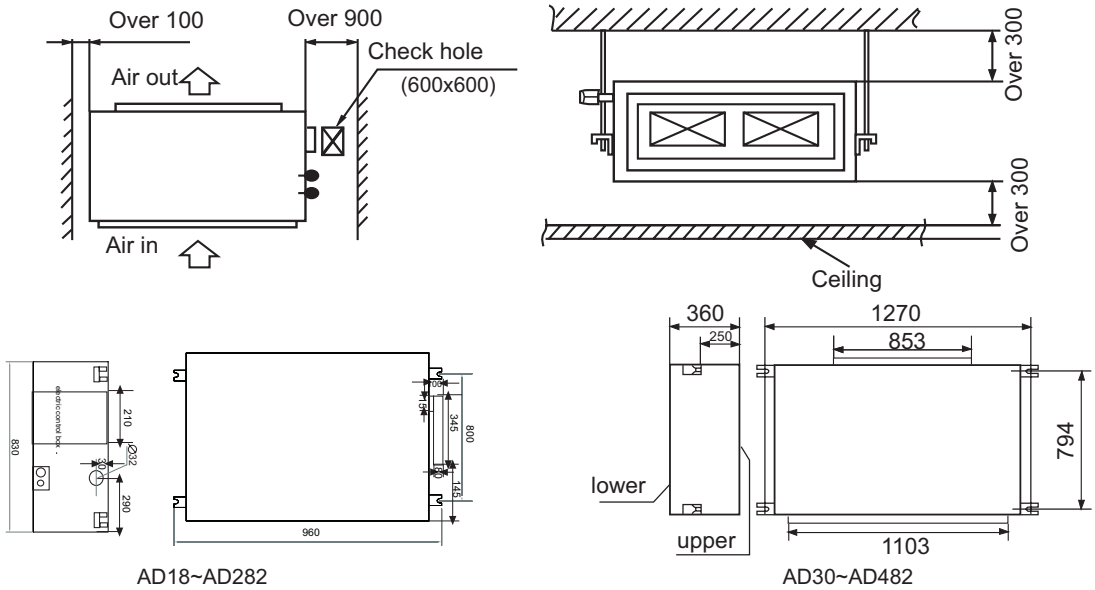

B. If necessary, prepare all the needed installation and checking hole on the ceiling (with existing ceiling)

- Before installation, prepare all the pipes (refrigerant, drainage) and wire (wire controller connection wire, indoor and outdoor unit connection wire) connected with indoor , so that after installation, they can be immediately connected with indoor.
- Cut the opening on the ceiling. Maybe it needs to strengthen the ceiling to keep the ceiling even and flat and prevent the ceiling from vibration. For details, please consult the builder.

C. Suspending bolts installation

(Use M10 screw bolt)

To bear the unit, in the place with existing ceiling, use the foundation bolt; while in the place with new bulit ceiling,use the built-in bolt, embedded bolt or other parts supplied on field.Before installation, adjust the distance to the ceiling.

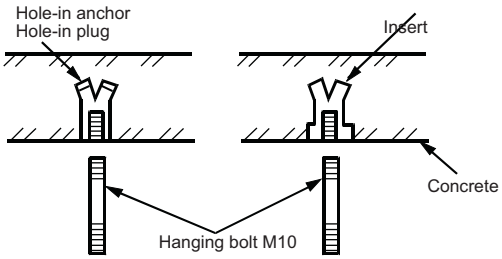

D. Installation of indoor unit

Fix the indoor unit to the suspending bolts.

If necessary, it is possible to suspend the unit to the beam, etc.

Directly use the suspending bolts instead of the suspending screws.

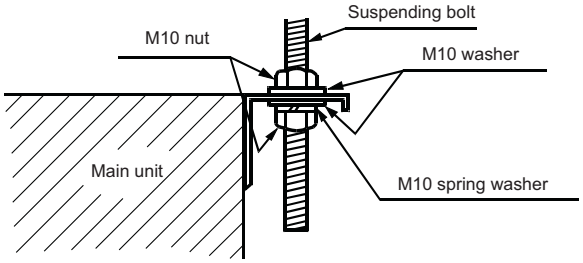

Note

When the dimensions of main unit and ceiling holes does not match, it can be adjusted with the slot holes of hanging bracket.

Adjusting to the horizon

Adjust the horizon with a gradienter or by the following method.

Make adjustment so that the relation between the lower surface of the unit and water level in the hose becomes what is in the figure.

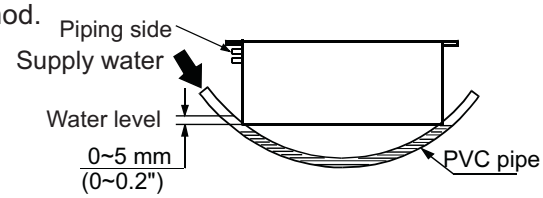

make the piping side slightly lower.

Unless the adjustment to the horizon is made properly, failure of the float switch may occur.

Air volume adjustment:

The air volume adjustment board is in the left down corner in the electric control box, by which you can adjust the air volume due to the requirement.

(4) Design of the duct and the air outlet

a. Count the necessary ESP to design the air sending/return duct and the bend. And select the proper model according to the ESP. Forbidden to use the high ESP unit as the low ESP unit, or to use without duct.

b. The air sending/return duct must be heat insulated.

c. Forbidden to get the air return directly from the ceiling.

d. Air return must be from the indoor side, and can not be from the corridor.

e. Forbidden to use the duct as the fresh air unit.

f. The air sending/return design should take the indoor air volume distribution into consideration. There should be a certain distance between air sending hole and air return hole, to prevent the air in short circuit. Meanwhile, position and direction of air outlet should consider the cooling/heating efficiency, and prevent the warm air not being blowed down because of the too high air outlet.

5. Drain Piping

(a) Drain piping should always be in a downhill grade (1/50~1/100) and avoid riding across an elevation or making traps.

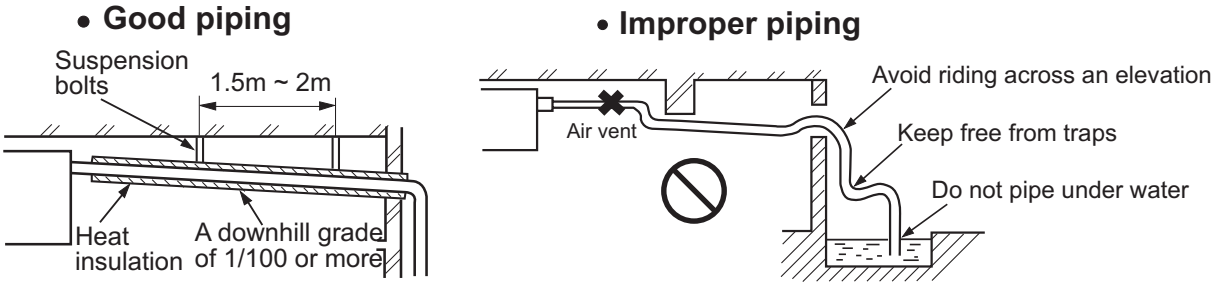

(b) When connecting the drain pipe to unit, pay suffcient attention not to apply excess force to the piping on the unit side. Also, fix the piping at a point as close as possible to the unit.

(c) For drain pipe, use hard PVC general purpose pipe VP-25(I.D.1") which can be purchased locally. When connecting, insert a PVC pipe end securely into the drain socket before tightening securely using the attached drain hose and clamp. Adhesive must not be used connection of the drain socket and drain hose (accessory).

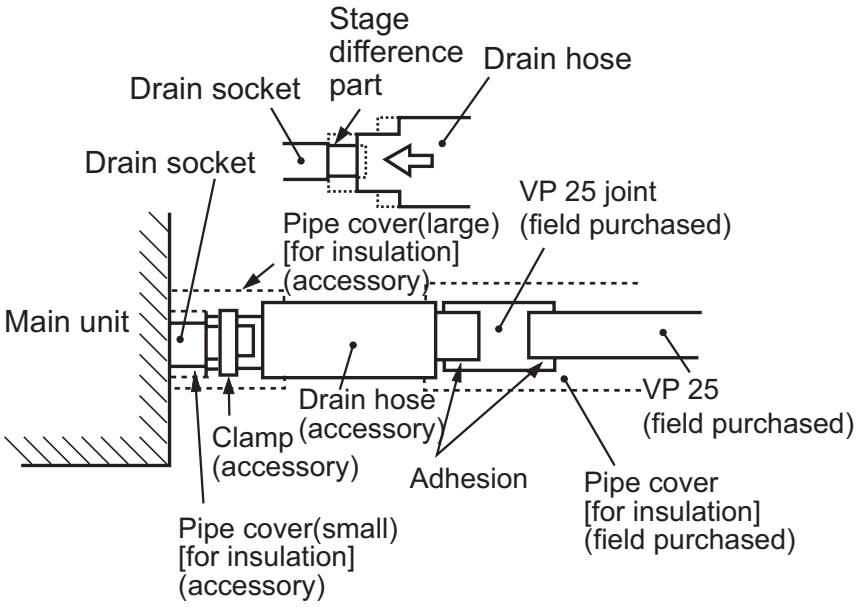

(d) When constructing drain piping for several units, position the common pipe about 100 mm below the drain outlet of each unit as shown in the sketch. Use VP-30(11/4") or thicker pipe for this purpose.

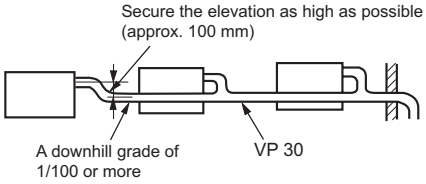

(e) The stiff PVC pipe put indoor side should be heat insulated.

(f) Avoid putting the outlet of drain hose in the places with irritant gas generated. Do not insert the drain hose directly into drainage, where the gas with sulfur may be generated.

(g) Backwater bend

Because the drain spout is at the position, which negative pressure may occur. So with the rise of water level in the drain pan, water leakage may occur. In order to prevent water leakage, we designed a backwater bend.

The structure of backwater bend should be able to be cleaned. As the below figure shown, use T type joint. The backwater bend is set near the air conditioner.

- As figure shown, set a backwater bend in the middle of drain hose.

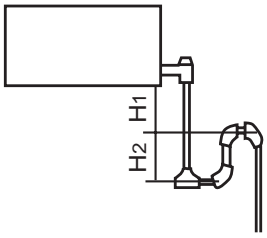

H1=100mm or the static pressure of air sending motor

H2=1/2H1 (or between 50~100mm)

Drainage Test

① Conduct a drainage test after completion of the electrical work.
② During the trial, make sure that drain flows properly through the piping and that no water leaks from connections.
③ In case of a new building, conduct the test before it is furnished with the ceiling.
④ Be sure to conduct this test even when the unit is installed in the heating season.

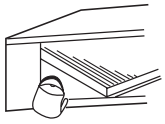

Procedures

① Supply about 1000 cc of water to the unit through the air outlet using a feed water pump.
② Check the drain while cooling operation.

6. Installation of air suction and discharging duct

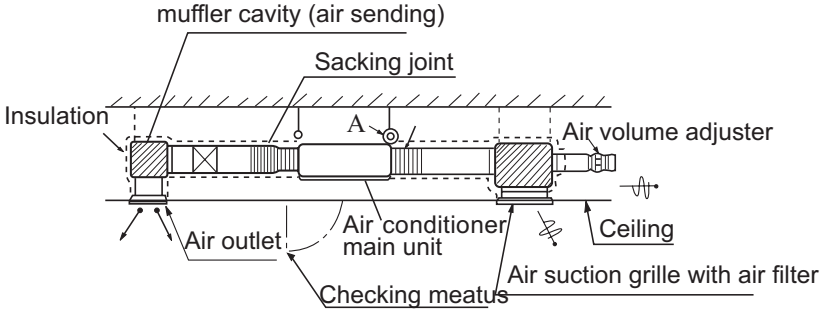

Enlarging chart of profile chart A

Vibration resistance hook

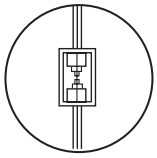

Please consult the after-sales service worker of Haier Air Conditioner for the choosing and installation of suction inlet, suction duct, discharging outlet and discharging duct. Calculating the design drawing and outer static pressure, and choose the discharging duct with proper length and shape.

- The length difference among every duct is limited below 2:1.
- Reduce the length of duct as possible as can.
- Reduce the amount of bend as possible as can.
- Use heat insulation material to bind and seal the part connecting main unit and the flare part of air discharging duct. Perform duct installation work, before the ceiling fit.

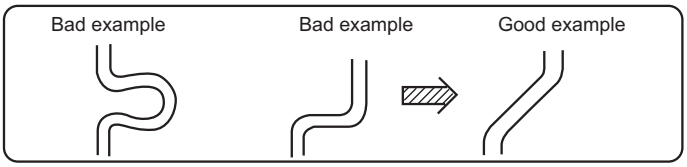

7. Calculation method of the dimension of the simple quadrate air duct

Presuming the unit length friction impedance of the duct is 1Pa/m, when the dimension of one side of the air duct is fixed as 250mm, as shown below:

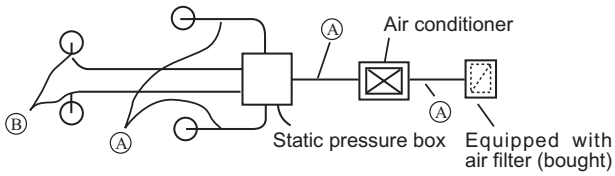

	AD302MHAHA AD382MHAHA AD482MHAHA	
	Air volume	Duct(mmxmm)
Ⓐ	2400m³/h (40m³/min)	250x560
Ⓑ	600m³/h (10m³/min)	250x190

- **The calculation of duct resistance (the simple calculation is as follow table)**

Straight part	Calculate as per 1m length 1Pa, 1Pa/m
Bend part	Each bend takes as a3~4m long straight duct
Air out part	Calculate as 25Pa
Static pressure box	Calculate as 50Pa/each
Air inlet grille (with air filter)	Calculate as 40Pa/each

- **The chosen chart of simple duct**

Note:1Pa/m=0.1mmAq/m

Shape / Item / Air volume	Square duct Dimension
$m^3/h(m^3/n)$	(mmxmm)
100	250 x 60
200	250 x 90
300	250 x 120
400	250 x 140
500	250 x 170
600(10)	250 x 190
800	250 x 230
1,000	250 x 270
1,200(20)	250 x 310
1,400	250 x 350
1,600	250 x 390

Shape / Item / Air volume	Square duct Dimension
$m^3/h(m^3/n)$	(mmxmm)
1,800(30)	250 x 430
2000	250 x 470
2400	250 x 560
3,000(50)	250 x 650
3,500	250 x 740
4,000	250 x 830
4,500	250 x 920
5,000	250 x 1000
5,500	250 x 1090
6,000(100)	250 x 1180

8. The attentive matters in installation of air suction and discharging duct

- Recommend to use anti-frost and sound-absorbing duct. (locally bought)
- The duct installation work should be finished before the fitment of ceiling.
- The duct must be heat insulated.
- The specific air-discharging outlet should be installed at the place where the airflow can be reasonably distributed.
- The surface should leave a checking meatus for checking and maintenance.

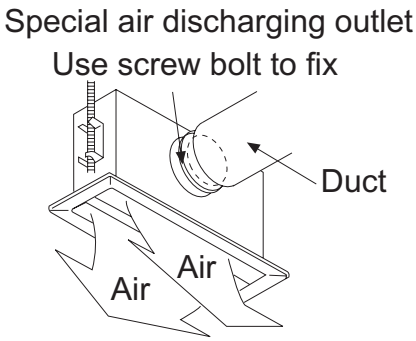

9. The examples of improper installation

- Do not use air in duct and take the ceiling inner side instead. The result is because of the irregular outer air mass, strong wind and sunshine, the humidity is increased.
- There may be water drop on the outside of duct. For cement and other new constructions, even if not taking ceiling inner side as duct, the humidity will also be so high. At this time, use glass fiber to perform heat preservation to the whole. (use iron net to bind the glass fiber)
- Maybe exceeding the unit operation limit (for example: when indoor dry bulb temperature is 35degree, web bulb temperature is 24degree), it may lead to overload of compressor.
- Affected by the capacity of air discharging fan, the strong wind in the outer duct and wind direction, when unit air sending volume exceeds the limit, the discharged water of heat exchanger will overflow, leading to water leakage.

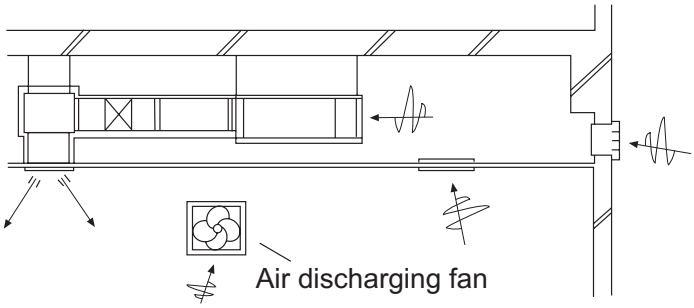

Improper example

3.2.6 Convertible type indoor installation

AC09-242MCAHA installation

Pipe connection requirement

Please refer to the specification to confirm the stop valve diameter and the permitted pipe drop and pipe length.

INSTALLATION PROCEDURE

Install the room air conditioner as follows:

PREPARING INDOOR UNIT INSTALLATION

1. REMOVE THE INTAKE GRILL

Open the intake grill and remove the three or four or six screws.(Fig. 1)

Remark: The main unit can be wired before the indoor unit is installed. Select the most appropriate installation order.

(Fig. 1)

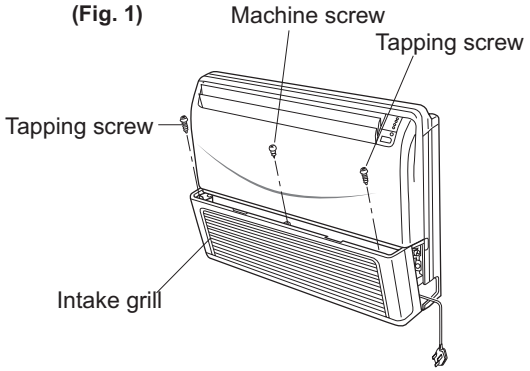

A. FLOOR CONSOLE TYPE

1. DRILLING FOR PIPING

Select piping and drain directions.(Fig.2)
The piping and drain can be made in three directions as shown below.

(Fig. 2)

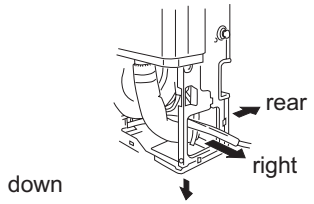

(Fig.3)

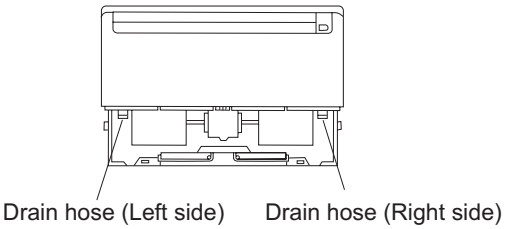

When the directions are selected, drill a 7 cm dia. hole on the wall so that the hole is tilted downward toward the outdoor for smooth water flow. When the pipe is led out from the rear, make a hole in Fig.6, at the position shown.

(Fig. 4)

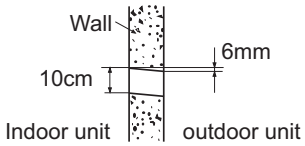

For series 14,18,24 when installing set to wall, install the accessory wall bracket at the position shown in Fig.5,and mount the set to it.

(Fig. 5)

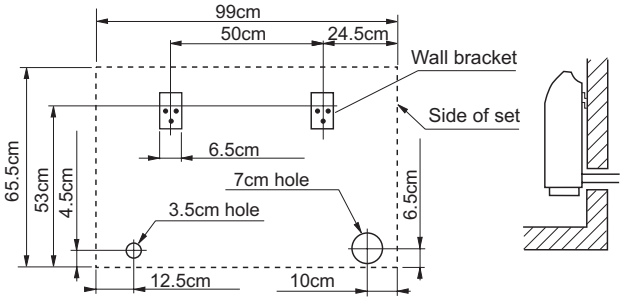

2. INSTALLING DRAIN HOSE

Select whether the drain hose will be connected to the left or right side.(Fig.3) Insert the drain hose into the drain pan, then secure the drain hose with a nylon fastener. (Fig.6)

(Fig. 6)

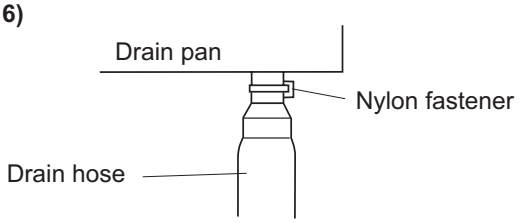

(Fig. 7)

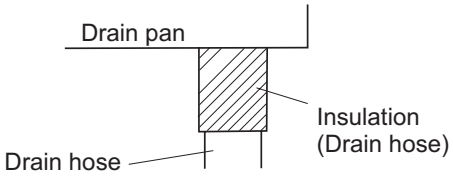

Wrap the insulation (drain hose) around the drain hose connection.(Fig.7)

Be sure to arrange the drain hose correctly so that it is leveled lower than the drain hose connecting port of he indoor unit.

(Fig. 8)

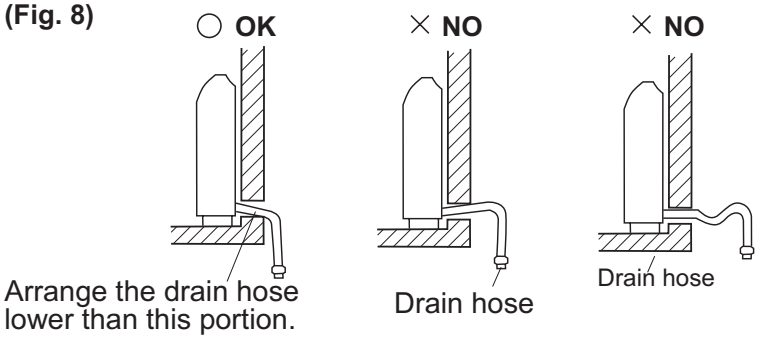

⚠ CAUTION

Do not install the unit drain hose side is too high. Height A should be less than 5 mm.(Fig.9)

(Fig. 9)

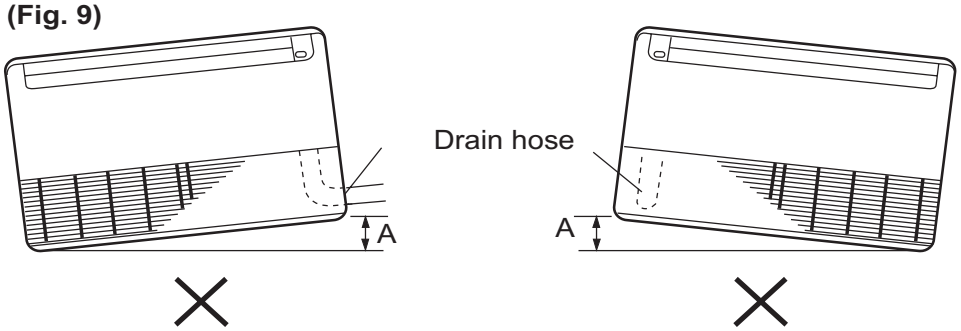

B. UNDER CEILING TYPE

Using the installation template, drill holes for piping and anchor bolts(for holes).(Fig.10)

(Fig. 10)

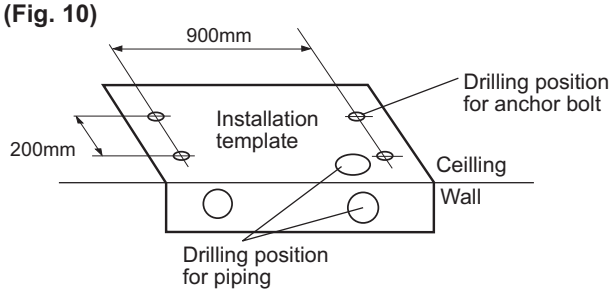

1. DRILLING FOR PIPING

Select piping and drain directions. (Fig.11)

(Fig. 11)

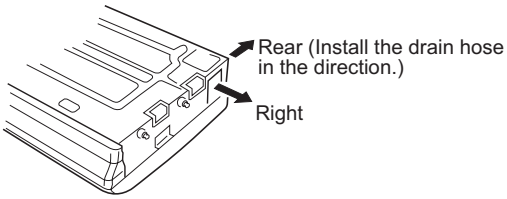

⚠ CAUTION

Install the drain hose at the rear; it should not be installed on the top or right side.

2. DRILLING HOLES FOR ANCHOR BOLTS AND INSTALLING THE ANCHOR BOLTS

When the directions are selected, drill 80mm and 50mm or 150mm dia. hole on the wall so that the hole is tilted downward toward the outdoor for smooth water flow.

(Fig. 12)

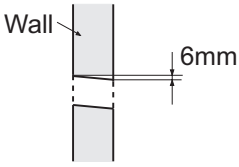

With a concrete drill, drill four 12.7 mm dia. Holes.(Fig.12)

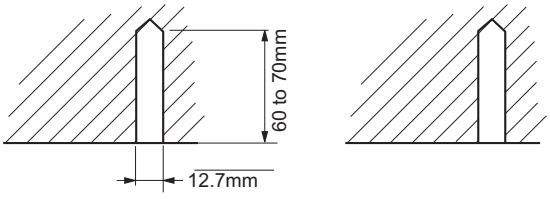

(Fig. 13)

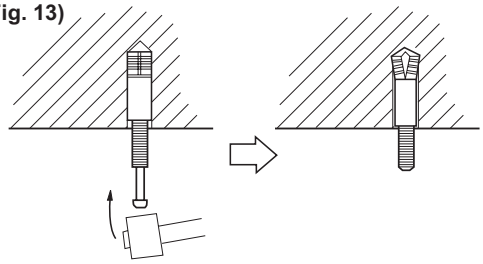

Insert the anchor bolts into the drilled holes, and drive the pins completely into the anchor bolts with a hammer. (Fig. 13)

3. INSTALLING BRACKETS

Install the brackets with nuts, washers and spring washers.(Fig. 14)

(Fig. 14)

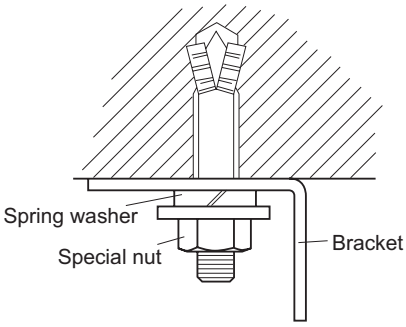

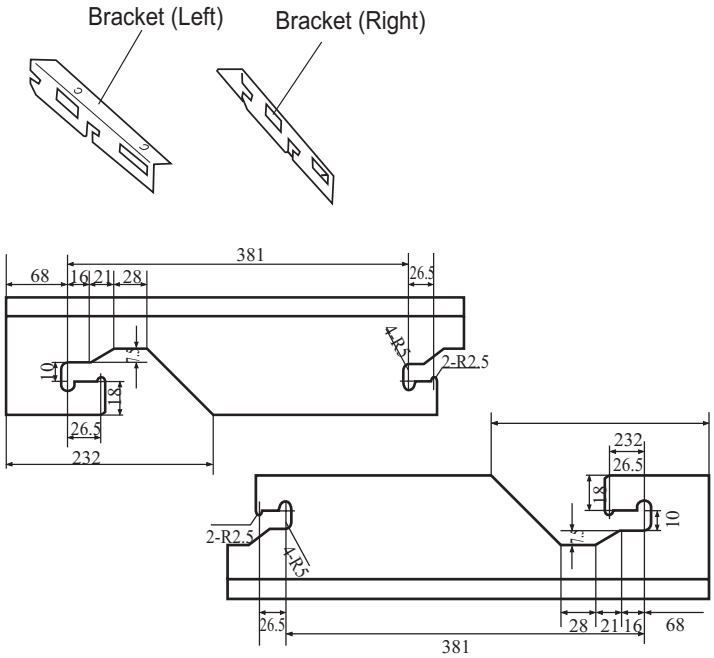

4. INSTALLING INDOOR UNIT

Reset the hex bolts as shown in Fig.15.

(Fig. 15)

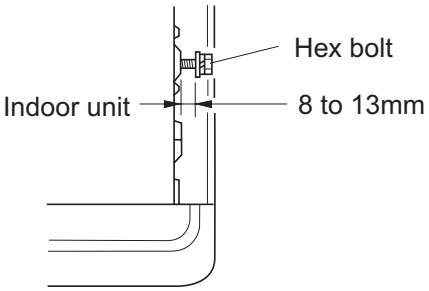

(Fig. 16)

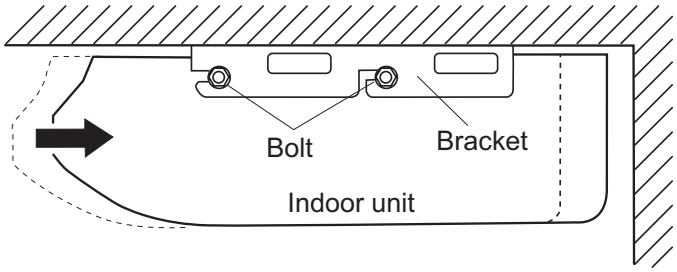

Now, securely tighten the hex bolts in both sides.

Apply the indoor unit to the brackets.(Fig.16)

5. INSTALL THE DRAIN HOSE

Select whether the drain hose will be connected to the left or right side.(Fig.3)
Insert the drain hose into the drain pan, then secure the drain hose with a nylon fastener.(Fig.6)
Wrap the insulation (drain hose)around the drain hose connection.(Fig.7)
Be sure to arrange the drain hose correctly so that it is leveled lower than the drain hose connecting port of the indoor unit.(Fig.8)

(Fig. 17)

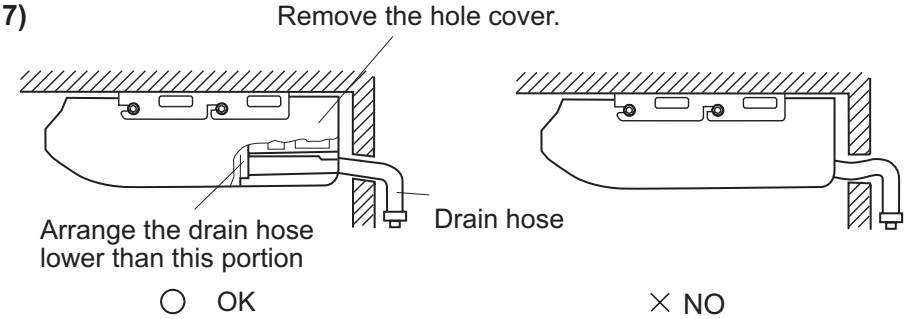

When drain hose is arranged backward. Secure the drain hose with the VT wire. (Fig. 18)

(Fig. 18)

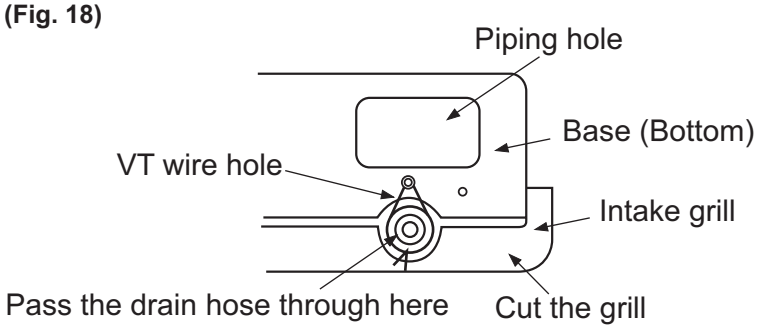

GAS LEAKAGE INSPECTION

⚠ CAUTION

After connecting the piping, check the joints for gas leakage with leakage detector.

HOW TO CONNECT WIRING TO THE TERMINALS

A. For solid core wiring (or F-cable)(Fig.19A)

(1) Cut the wire with a wire cutter or wire-cutting pliers, then strip the insulation to about 25mm of the exposed solid wire.
(2) Using a screwdriver, remove the terminal screw(s) on the terminal board.
(3) Using pliers, bend the solid wire to form a loop suitable for the terminal screw.
(4) Shape the loop wire properly, place it on the terminal board and tighten securely with the terminal screw using a screw driver.

B. For strand wiring(Fig.19B)

(1) Cut the wire with a wire cutter or wire-cutting pliers, then strip the insulation to about 10mm of the exposed strand wiring.
(2) Using a screwdriver, remove the terminal screw(s)on the terminal board.
(3) Using a round terminal fastener or pliers, securely clamp a round terminal to each stripped wire end.
(4) Position the round terminal wire, and replace and tighten the terminal screw using a screw driver.

(Fig. 19)

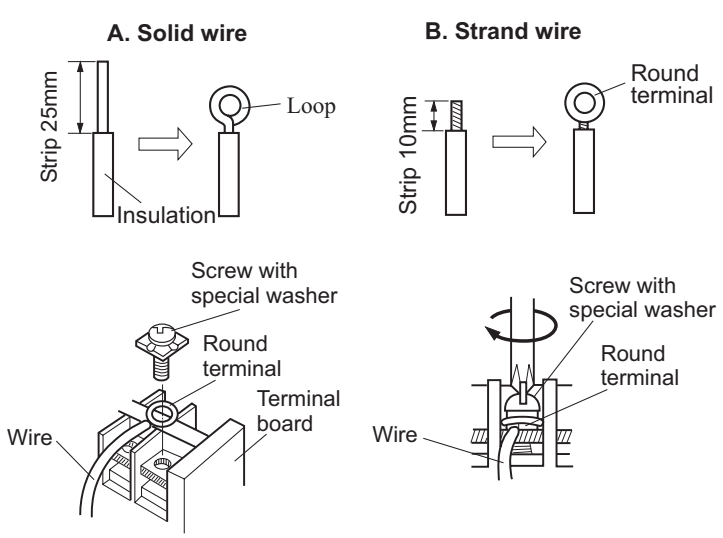

HOW TO FIXED CONNECTION CORD AND POWER CABLE AT THE CORD CLAMP

After passing the connection cord and power cable through the insulation tube, fasten it with the cord clamp, as shown in Fig.20

(Fig. 20)

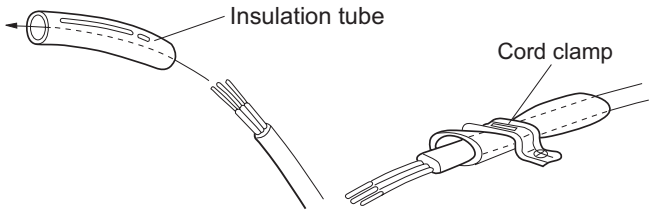

Use VW-1, 0.5 to 1.0 mm thick, PVC tube as the insulation tube.

ELECTRICAL WIRING

⚠ CAUTION
(1) Match the terminal block numbers and connection cord colors with those of the outdoor unit. Erroneous wiring may cause burning of the electric parts.
(2) Connect the connection cords firmly to the terminal block. Imperfect installation may cause a fire.
(3) Always fasten the outside covering of the connection cord with the cord clamp. (If the insulator is chafed, electric leakage may occur.)
(4) Always connect the ground wire.

1. INDOOR UNIT SIDE

(1) Remove the electric component box.

(Fig. 21)

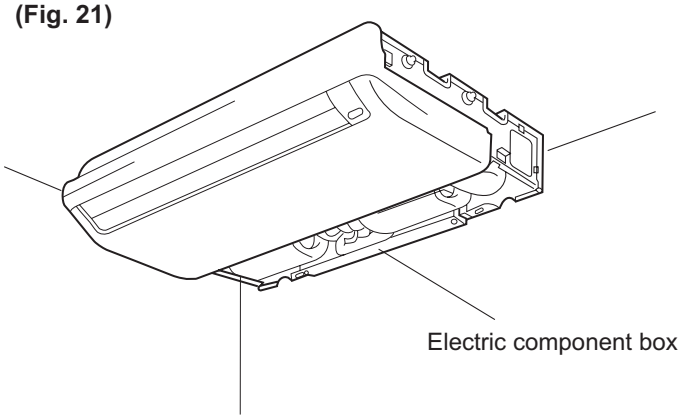

(Fig. 22)

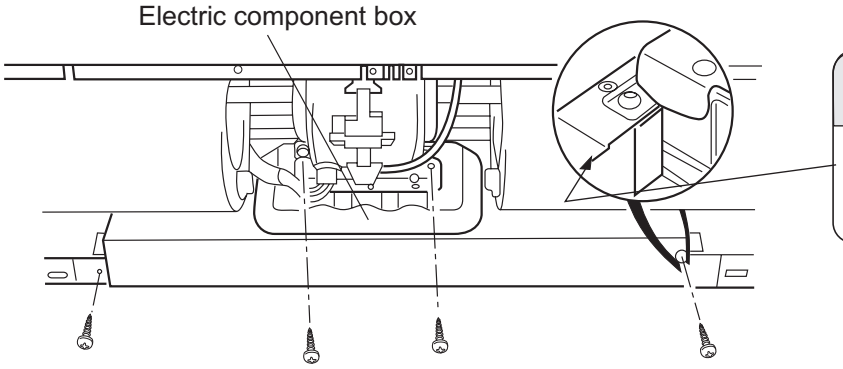

⚠ CAUTION

Do not remove the screws. If the screws are removed, the electric component box will fall.

(2) Pull out the electric component box.

(Fig. 23)

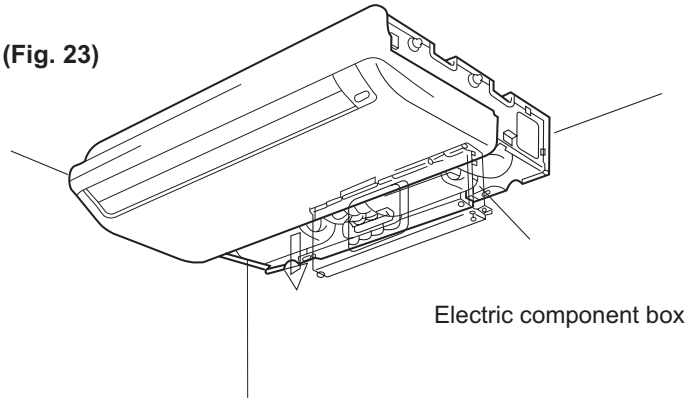

(3) Remove the electric component box cover.

(Fig. 24)

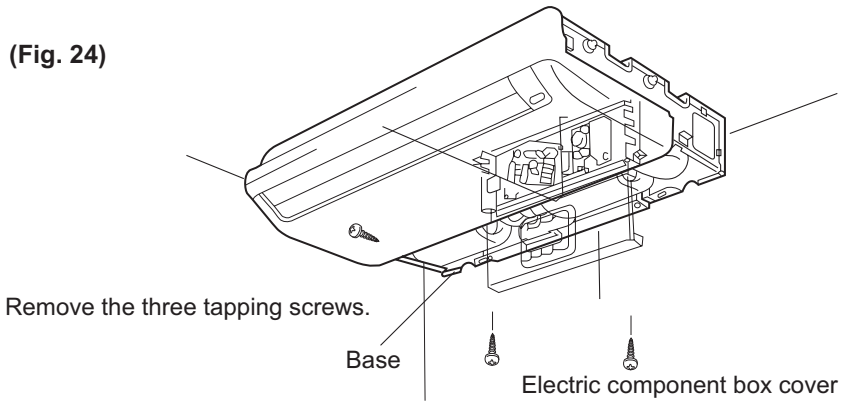

⚠ CAUTION

Be careful not to pinch the lead wires between the electric component box and base.

(4) Wiring

(1) Remove the cord clamp.
(2) Process the end of the connection cords to the dimensions shown in Fig.25.
(3) Connect the end of the connection cord fully into theterminal block.
(4) Fasten the connection cord with a cord clamp.
(5) Fasten the end of the connection cord with the screw.

ELECTRICAL WIRING

⚠ WARNING

(1) Always use a special branch circuit and install a special receptacle to supply power to the room air conditioner.

(2) Use a circuit breaker and receptacle matched to the capacity of the room air conditioner.

(3) The circuit breaker is installed in the permanent wiring. Always use a circuit that can trip all the poles of the wiring and has an isolation distance of at least 3mm between each pole.

(4) Perform wiring work in accordance with standards so that the room air conditioner can be operated safely and positively.

(5) Install a leakage circuit breaker in accordance with the related laws and regulations and electric company standards.

⚠ CAUTION

(1) The power source capacity must be the sum of the room air conditioner current and the current of other electrical appliances. When the current contracted capacity is insufficient, change the contracted capacity.

(2) When the voltage is low and the air conditioner is difficult to start, contact the power company the voltage raised.

TEST RUNNING

1. CHECK ITEMS

(1) INDOOR UNIT

(1) Is operation of each button on the remote control unit normal?
(2) Does each lamp light normally?
(3) Do not air flow direction louvers operate normally?
(4) Is the drain normal?

(2) OUTDOOR UNIT

(1) Is there any abnormal noise and vibration during operation?
(2) Will noise, wind, or drain water from the unit disturb the neighbors?
(3) Is there any gas leakage?

CUSTOMER GUIDANCE

Explain the following to the customer in accordance with the operating manual:

(1) Starting and stopping method, operation switching, temperature adjustment, timer, air flow switching, and other remotecontrol unit operations.
(2) Air filter removal and cleaning, and how to use air louvers.
(3) Give the operating and installation manuals to the customer.

MOUNT THE COVER PLATE AND THE INTAKE GRILL

1.Mount the cover plate. (Right)

(1) Cut a pipe exit hole in the right plate. This is only when the pipe exits from the right side. (This operation is not required when the protrusion is on the top or rear.)

(Fig. 26)

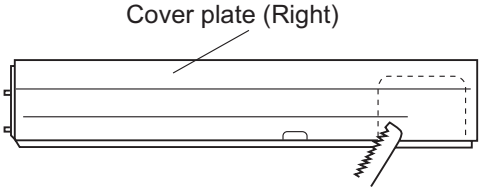

(2) Join the cover plates (right) and mount with screws.

(Fig. 27)

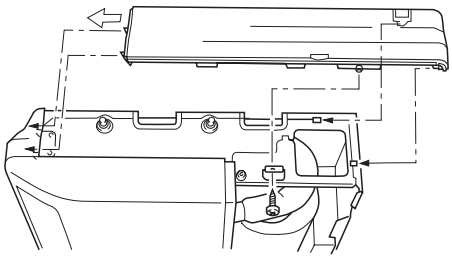

2. Mount the cover plate.(Left)

(1) Join the cover plate (left) and mount with screws.

(Fig. 28)

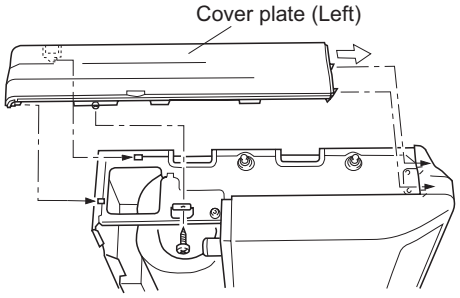

3. Mount the intake grill.

(1) Cut the right side of the intake grill. This is only when the pipe exits from the right side

(Fig. 29)

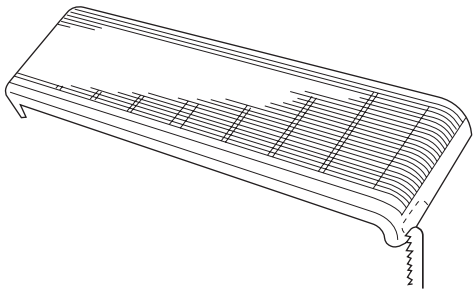

(2) Insert the hinges on the bottom of the intake grill into the holes in the base assembly. Then mount the arms to the three areas on the top of the intake grill.

(Fig.30)

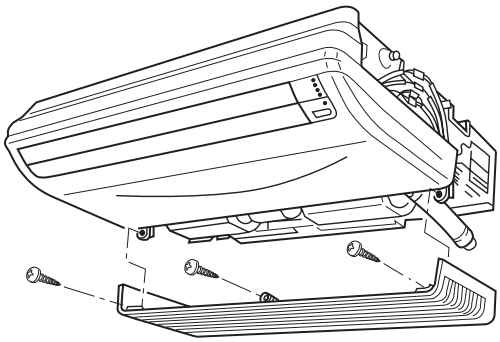

AC382MFAHA, AC482MFAHA installation

For mounted on the ceiling:

Fig. 1

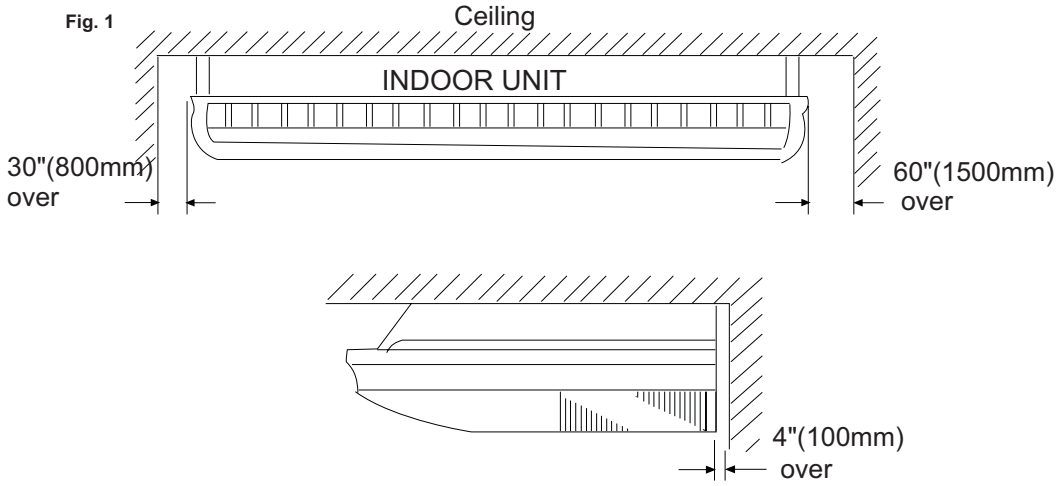

For half concealed installation:

Fig. 2

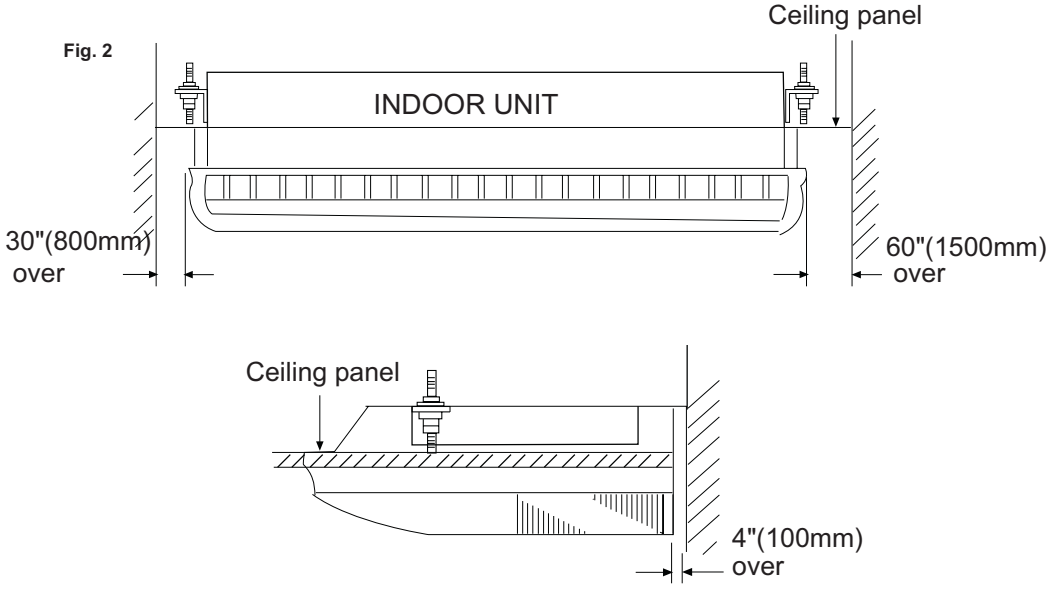

2. CONNECTION PIPE REQUIREMENT

INSTALLATION PROCEDURE

Install the room air conditioner as follows:

1) REMOVE THE INTAKE GRILL AND SIDE COVER

(1) Remove the two Air filters

(2) Remove the two intake grilles

(3) Remove the Side cover A (Right and left side)

(4) This air conditioner can be set up to intake fresh air .

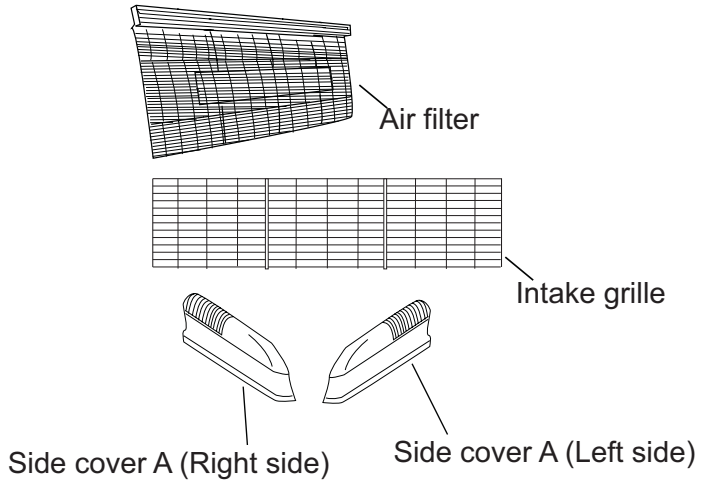

2) LOCATION OF CEILING SUSPENSION BOLTS

Fig. 3

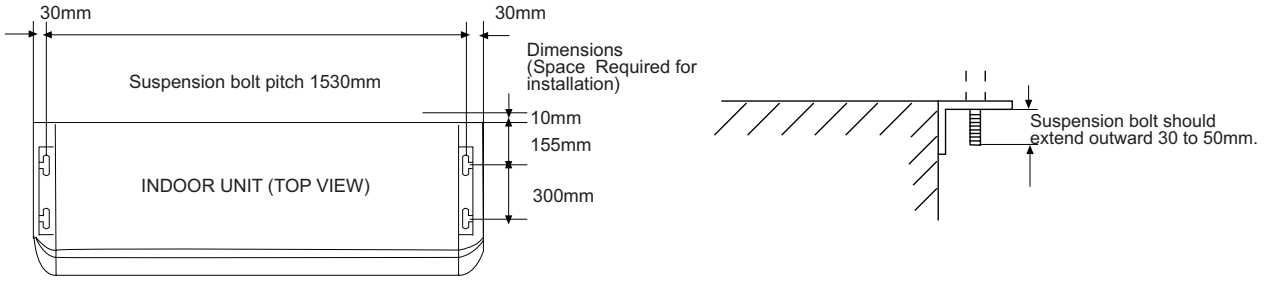

For half-concealed installation

Supension-bolt pitch should be as shown in Fig.4.

Fig. 4

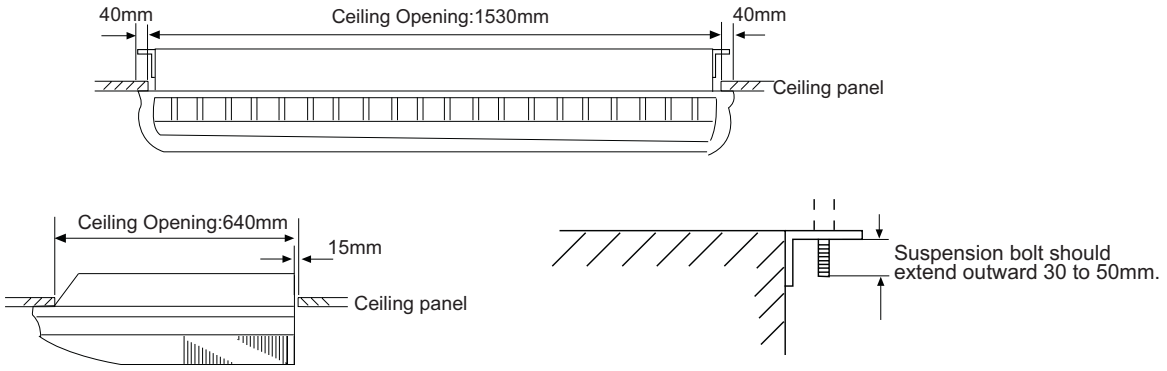

3. DRILLING THE HOLES AND ATTACHING THE SUAPENSION BOLTS

(1) Drill ϕ25mm holes at the suspension-bolt locations.

(The two special nuts are provided with the unit. The M10 nut must be obtained locally.) Refer to Fig.5.

(2) Install the bolts, then temporarily attach Special nuts A and B and a normal M10 nut to each bolt.

Fig. 5

Bolt Strength	980 to 1470 N (100 TO 150 kgf)

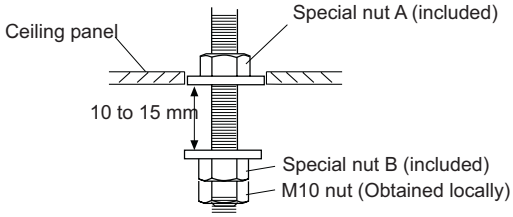

IF USING ANCHOR BOLTS

(1) Drill holes for anchor bolts at the locations at which you will set the suspension bolts.Note that anchor bolts (to be obtained locally).

(2) Install the anchor bolts ,then temporarily attach special nut "B" (included) and a locally-procurde M10 nut to each of the bolts. (See Fig.6.)

Anchor-Bolt Strength	980 to 1470 N (100 TO 150 kgf)

Fig. 6

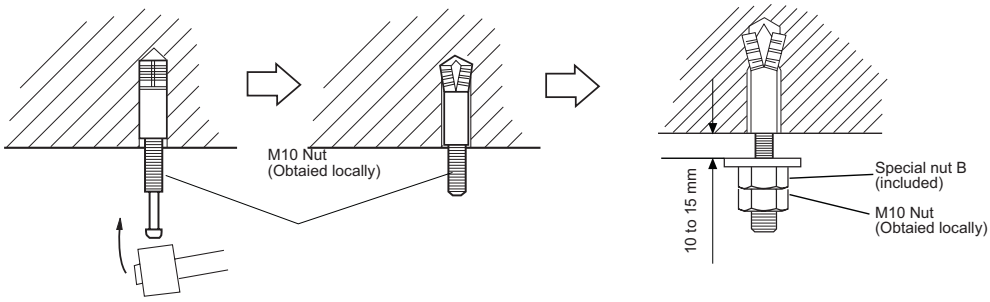

4. INSTALLING THE INDOOR UNIT

(1) Lift unit so that suspension bolts pass through suspension fittings at the sides (four places),and slide the unit back.(See Fig.8.)

Fig. 7

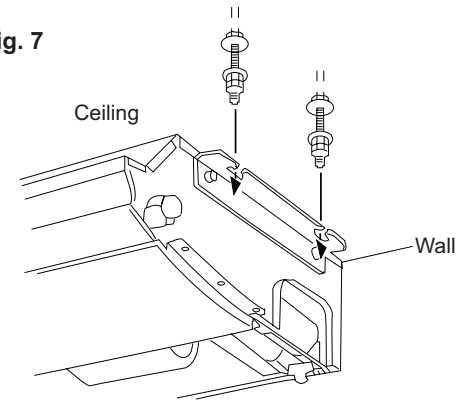

Fig. 8

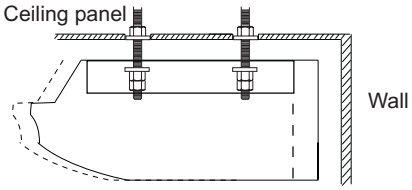

(2) Fasten the indoor unit into place by tightening-up the special "B",blots and the M10 nuts. Make sure that unit is secure and willl not shift back and forth.

FOR HALF-CONCESLED INSTALLATION

When installing the indoor unit in a semi-concesled orientation, make sure to reinforce the insulation of the unit on all sides. Drops of water may fall from the unit if it is not thoroughly insulated.

Fig. 9

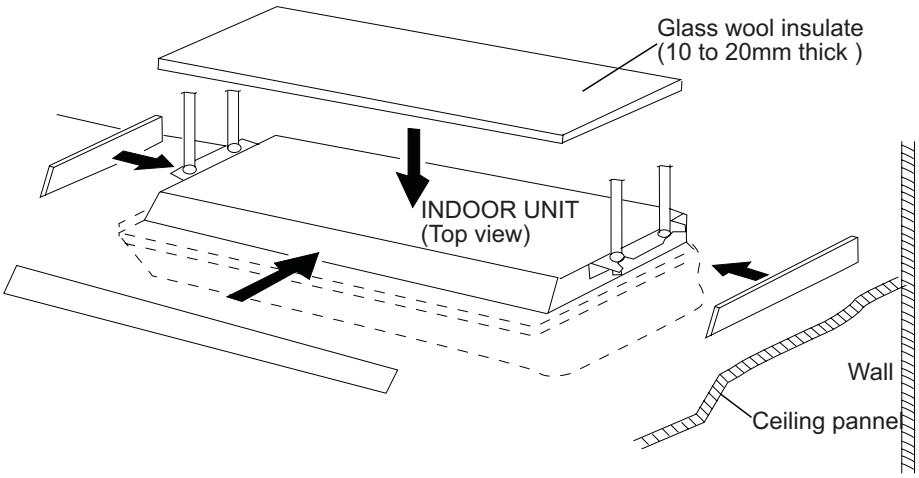

⚠ CAUTION

In order to check the drainage, be sure to use a level during installation of the indoor unit. If the installation site of the indoor unit is not level, water leskage may occur

5. INSTALLING THE COUPLER HEAT INSULATION

After checking for gas leaks, insulate by wrapping insulation around the two parts (large and small) of the indoor unit coupling, using the coupler hest insulation.

After installling the coupler heat insulation, wrap both ends with vinyl tape so that there is no gap.

Secure both ends of the heat insulation material using nylon fasteners.

Fig. 10

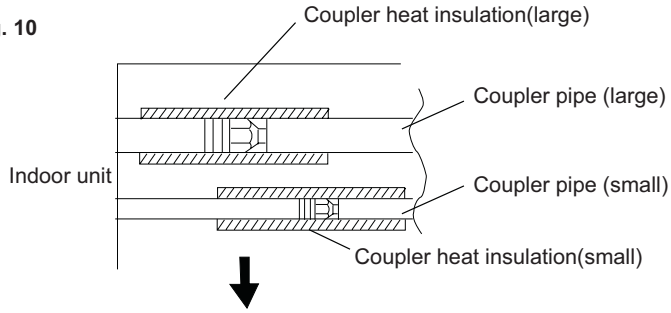

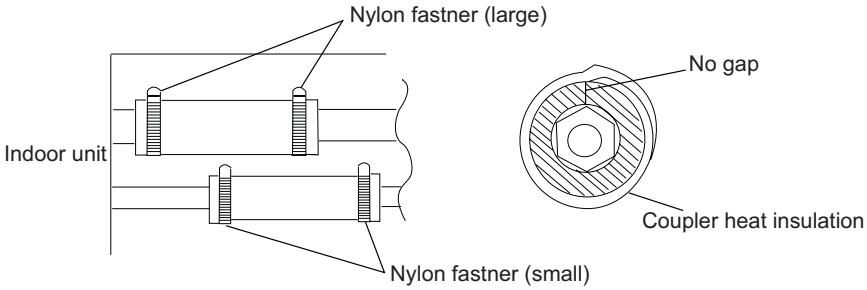

When using an auxiliary pipe, make sure that the fastener used is insulated in the sane way.

6. DRAIN PIPING

Install the drain pipe with downward gradient (1/50 to 1/100) and so there are no rises or traps in the pipe.
Use general hard polyvinyl chloride pipe (VP25)[outside diameter 38 mm.]
During installation of the drain pipe,be careful to avoid applying pressure to the drain point of the unit.
When the pipe is long,install supporters(Fig 11).
Do not perform air bleeding.
Always heat insulate (8mm or over thick) the indoor side of the drain pipe.

Fig. 11

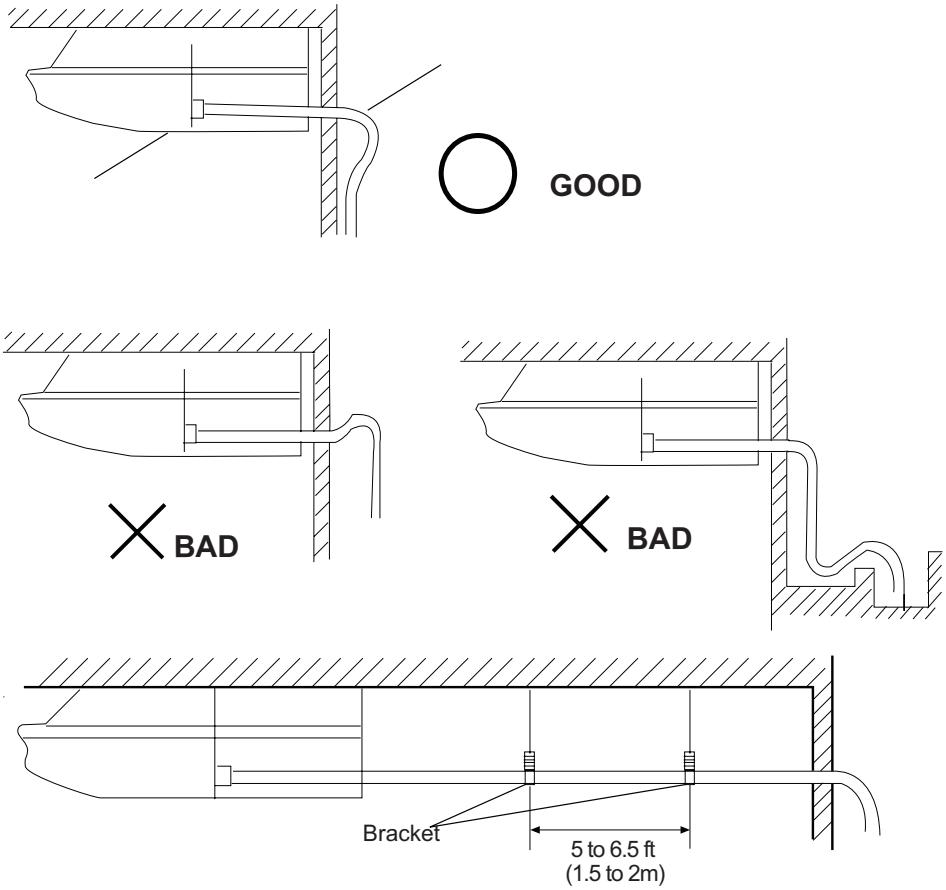

(1) Install insulation for the drain pipe.(See Fig.12 and 13)

Cut the included insulation material to an appropriate size and adhere it to the pipe.

Fig. 12

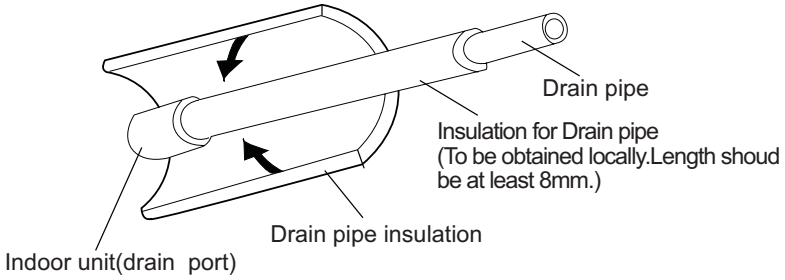

Fig. 13

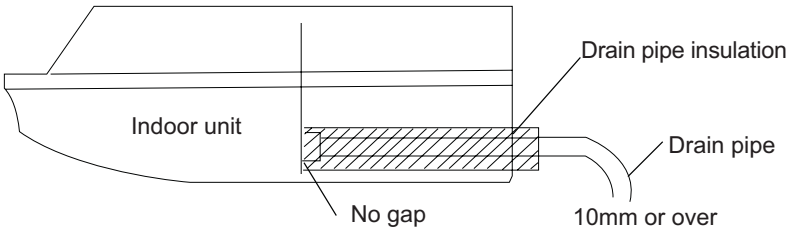

(2) If "Right rear piping ":fasten the drain pipe with VT wires so that the pipe slopes correctly within the indoor unit.

Fig. 14

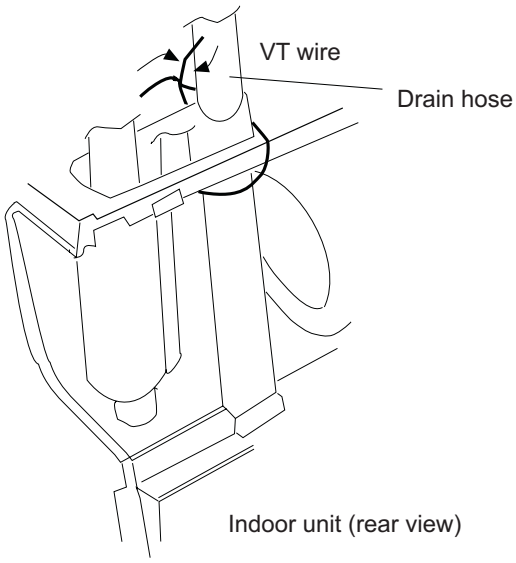

7. ELECTRICAL WIRING

HOW TO CONNECT WIRING TO THE TERMINALS

A.For solid core wiring (or F-cable)

(1)Cut the wire and with a wire cutter or wire-cutting pliers,then strip the insulation to about 15/16"(25mm) of expose the solid wire.

(2)Using a screwdriver ,remove the terminal screw(s) on the terminal board.

(3)Using pliers,bend the solid wire to form a loop suitable for the terminal screw.

(4)shape the loop wire properly,place it on the terminal board and tighthen securely with the terminal screw using a screwdriver.

B.For strand wiring

(1)Cut the wire and with a wire cutter or wire-cutting pliers,then strip the insulation to about 3/8"(10mm) of expose the solid wire.

(2)Using a screwdriver ,remove the terminal screw(s) on the terminal board.

(3)Using a round terminal fastener or pliers,securely clamp a round terminal to each stripped wire end.

(4)Position the round terminal wire,and replace an tighten the terminal screw using a screwdriver.

Fig. 15

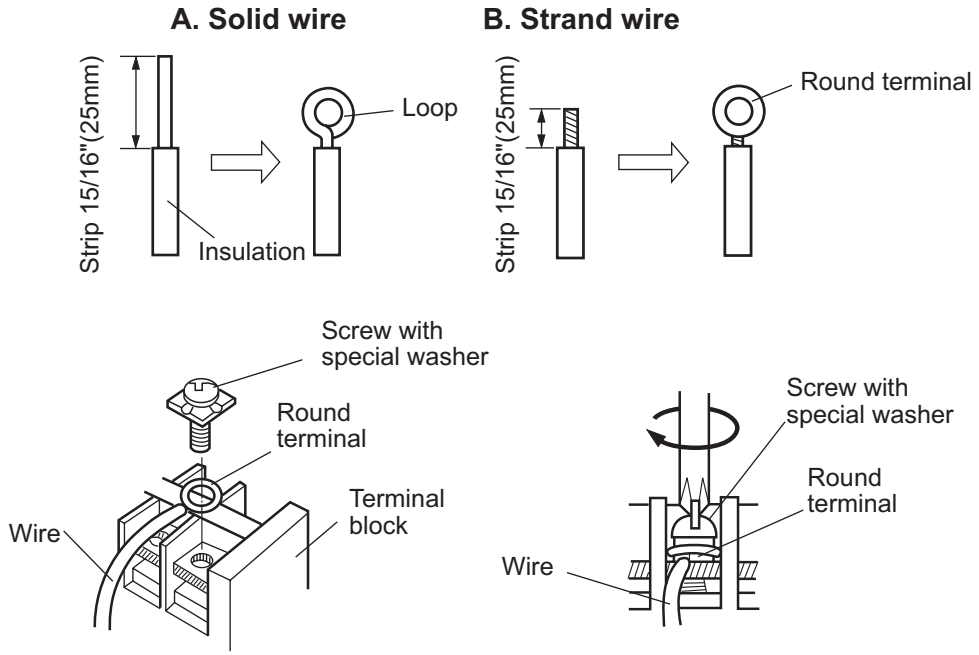

HOW TO FIX CONNECTION CORD AND POWER CABLE AT THE CORD CLAMP

After passing the connection cord and power cable through the insulation tube, fasten it with the cord clamp, as shown in Fig.16

ELECTRICAL REQUIREMENT

- Electric wire size and fuse capacity:

Series		38, 48
Connection cord (mm^2)	MAX	3.5
	MIN	2.0
Fuse capacity(A)		30

Fig. 16

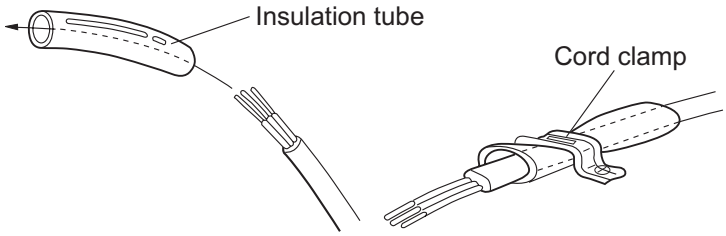

Use VW-1, 0.5 to 1.0 mm thick, PVC tube as the insulation tube.

⚠ CAUTION
(1) Match the terminal block numbers and connection cord colors with those of the outdoor unit. Erroneous wiring may cause burning of the electric parts.
(2) Connect the connection cords firmly to the terminal block. Imperfect installation may cause a fire.
(3) Always fasten the outside covering of the connection cord with the cord clamp. (If the insulator is chafed, electric leakage may occur.)
(4) Always connect the ground wire.

8. FRESH-AIR INTAKE

(1)Take away the knockout hole for the fresh-air intake,as shown in Fig.17.(If using half-concealed installation ,take down the top knockout hole instead)

Fig. 17

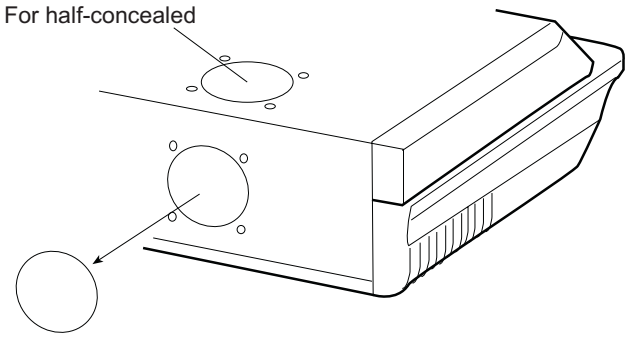

⚠ CAUTION
(1)When removing the cabinet(iron plate),be careful not to damage the indoor unit internal parts and surrounding area(outer case).
(2)When processing the cabinet(iron plate),be careful not to injury yourself with burrs,etc.

(2)Fasten the round flange (optional) to the fresh air intake,as shown in Fig.18.(If using half-concealed installation, attach to the top.)

Fig. 18

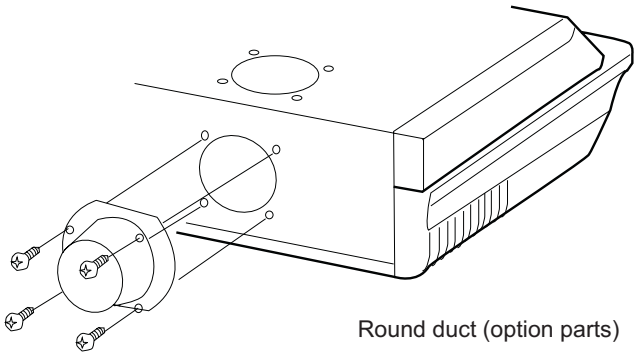

[After completing "INDOOR UNIT INSTALLATION"....]

(3)Connect the duct to the round flange.

(4)Seal with a band and vinyl tape,etc.so that air does not leak from the connection.

Fig. 19

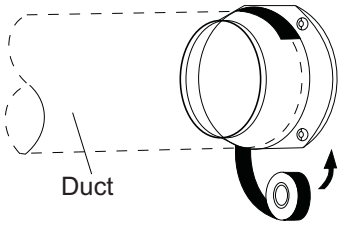

9. CONNECTION CORDS

(1) Remove the cord clamp.

(2) Put the end of the connection cords to the correct positions.

(3) Connect the end of the connection cord fully into the terminal block.

(4) Fasten the connection cord with a cord clamp.

(5) Fasten the end of the connection cord with the screw.

(6) The power cable and connecting cable are self-provided.

⚠ WARNING
(1) Always use a special branch circuit and install a special receptacle to supply power to the room air conditioner.
(2) Use a circuit breaker and receptacle matched to the capacity of the room air conditioner.
(3) The circuit breaker is installed in the permanent wiring. Always use a circuit that can trip all the poles of the wiring and has an isolation distance of at least 3mm between the contacts of each pole.
(4) Perform wiring work in accordance with standards so that the room air conditioner can be operated safely and positively.
(5) Install a leakage circuit breaker in accordance with the related laws and regulations and electric company standards.

3.2.7 Explanation for indoor pre-set checking hole

To standardize indoor installation and be convenient for maintenance and design before sale, herein indoor pre-set checking hole will be executed as the following:

(1) Cassette type indoor unit

A. AB072~AB162, pre-set the 600*600 checking hole at the electric control box side.

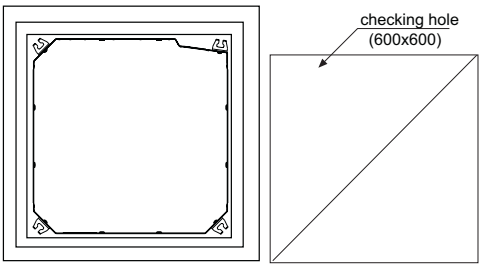

B. AB182~AB482, pre-set the 600*600 checking hole at the electric control box side.

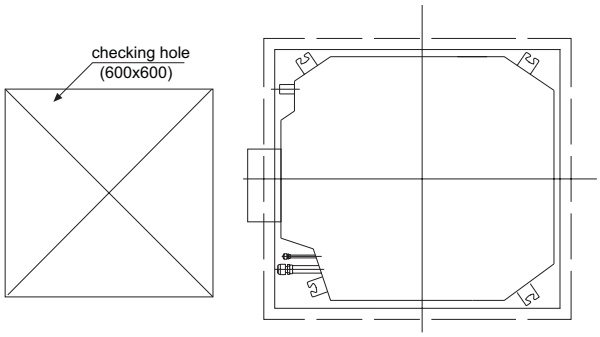

(2) Duct type indoor unit

Pre-set the 600*600 checking hole at the electric control box side.

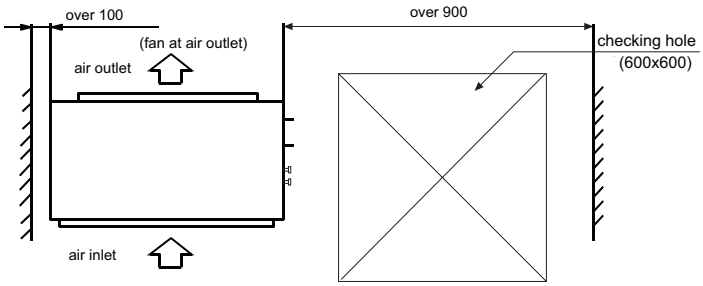

(3) Low ESP Duct type indoor unit

Pre-set the 600*600 checking hole at the electric control box side.

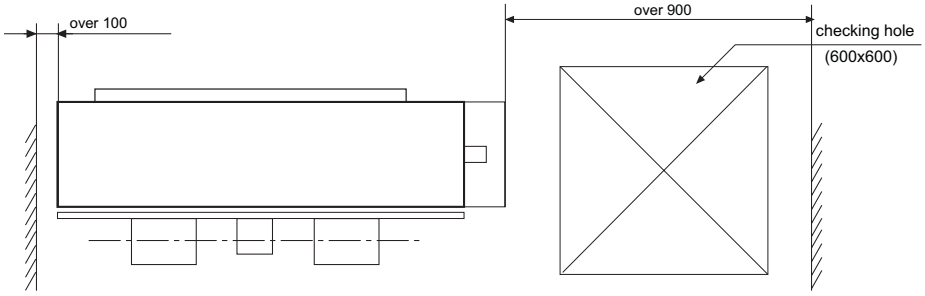

(4) If the ceiling can not be used for maintenance, please prepare enough space above the unit as checking hole, taking duct unit as an example:

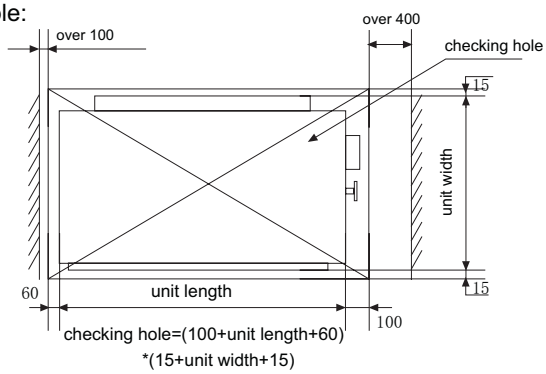

(5) The checking hole is used to maintain the unit for the engineer. Generally as long as it is large enough to check and change parts, the recommended dimension is 600*600 near the electric control box.

3.2.8 Controller functions and installation

(1) Function introduction

filter indication
when it displays,filter needs to be cleaned.

central indication
when the unit is controlled by the central controller,it will display

operation indication
When compressor running, display this icon.

standby indication
when the unit is electrified but is at standby state, display the icon.

fan speed indication
display the set fan speed.

operation mode indication
display the selected mode.

health function indication

unit number indication

temperature indication
display room temp., set temp., unit No. etc

swing type indication

timer operation indication

check operation indication

command display
when in compulsory operation,it will display. Not used temporarily.

ventilation indication

timer button
used to select timer operation

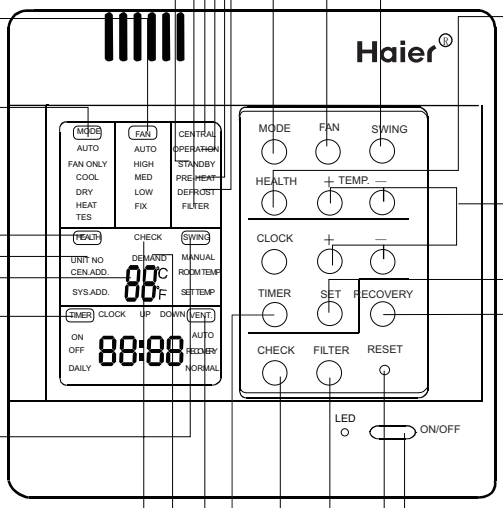

mode button
used to select operation mode
Recommended set temp.

cool:26~28℃	dry:21~24℃
heat:22~24℃	fan: no need to set temp.

fan speed button
used to change fan speed

in heating,when defrosting, it will display

when the unit in pre-heat mode, it will display

swing button
to open or close the louver

health button
to control oxygen generation and negative ion function

temp./clock adjustment
to adjust set temp. and set clock, etc.

clock, timer, address setting button

ventilation button
to start up or stop ventilation function, press it, the mode will change as follow:

no display → vent auto → vent recovery → vent normal

on/off button
to start up or stop the unit, press it, start up the unit; press again, stop the unit

reset button
when wired controller is abnormal, press it with a pin to reset the controller

filter reset button
after cleaning the air outlet and the filter, press it

auto-check button
to check the failure

Note:
The displayed temperature will differ from the thermometer, it is normal.
The model in this manual is without health and ventilation function, and for non-electric heating model, there is no electric heating function.

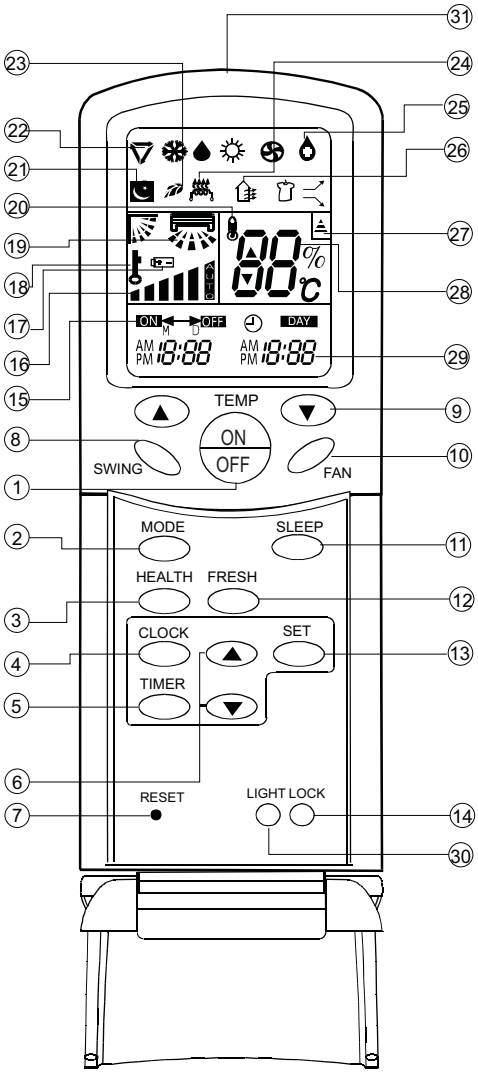

1. ON/OFF Button
Used for unit start and stop
Note: the button on wired controller can set compulsory cooling.
2. MODE Button
used to select operation mode: AUTO, COOL, DRY, FAN, HEAT
3.HEALTH Button
Used to set health mode, if the unit has the negative ion function and oxygen bar function.
4.CLOCK Button
Used to set correct time.
5.CLOCK Button
Used to select TIMER ON, TIMER OFF, TIMER ON/OFF
6.Up and down Button
Used to set TIMER and CLOCK up or down.
7.RESET Button
Press this button by using a sharp article to resume the correct operation of the remote controller in case of malfunctions
8.SWING Button
used to adjust louver direction
9. Temp. set button
used to set temp.(16~30degree)
10. Fan button
used to select fan speed: AUTO, LOW, MED, HIGH
11. SLEEP button
used to set sleep mode
12. FRESH button
used to set fresh air function
13. SET button
used to confirm TIMER and CLOCK time
14. LOCK button
used to lock operation button and LCD
15. TIMER ON/OFF indication
16. Fan speed indication
On remote controller:

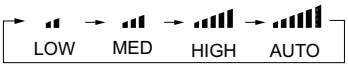

17. Battery energy indication
18. Locked state display
19. Air direction display
20. Ambient humidity indication icon (no used)
21. Sleep state indication
22. Operation mode indication

operation	display
AUTO	
COOL	
DRY	
HEAT	
FAN	

Recommended set temp.

cool:26~28℃	dry:21~24℃
heat:22~24℃	fan: no need to set temp.

23. Health function indication
to display health operation
24. Electric heating indication
25. Comfortable operation icon
26. Fresh air state icon
27. Signal emission icon
28. Temp. display
used to display set temp. and room temp.
29. Clock indication
30. Light button
used to light the operation panel, display more darker/ more brighter
31. Signal emission head

Cautions:
Do not throw or damage the remote controller.
In the room equipped with electronic startup lamp, converting lamp or wireless phone, the signal receiver will be interfered. When using the controller, get closer to the indoor unit.

Note:
1. The models in this manual are without health, fresh air, sleep function and the indications 17, 19, 20, 21, 23, 25, 26.
2. Non-electirc heating model, no electric heating function and the indication 24.
3. For some models, there are no fresh button and the indication.

(2) Start/stop unit

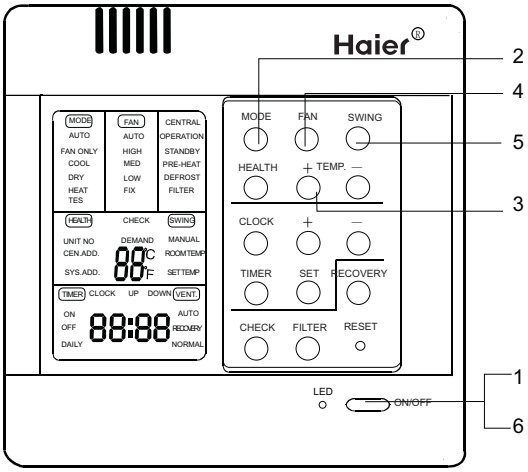

Press ON/OFF button to start your air conditioner. Previous operation status appears on LCD (except for TIMER and SWING setting).

1 Press "ON/OFF" button
The unit begins to run, LED on the wired controller or power lamp on remote controller will be light.

2 Select operation mode
Press "MODE" button, the modes for wired controller change as follow :
"AUTO"→"FAN"→"COOL"→"DRY"→"HEAT".
Press "MODE" button, the modes for remote controller change as follow :

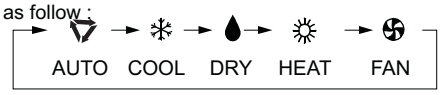

3 Press TEMP button
For wired controller, press "+", "-" to set indoor temp.
For remote controller, press "▲", "▼" to set indoor temp.

4 Press FAN button(at DRY mode, fan speed is AUTO)
For wired controller, fan speed changes as below
"AUTO"→"HIGH"→"MED"→"LOW"→"AUTO".
For remote controller, fan speed changes as below

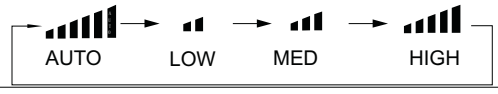

5 Press "SWING" button, louver swings.

6 Press "ON/OFF" button, stop the unit.
LED on wired controller is off.

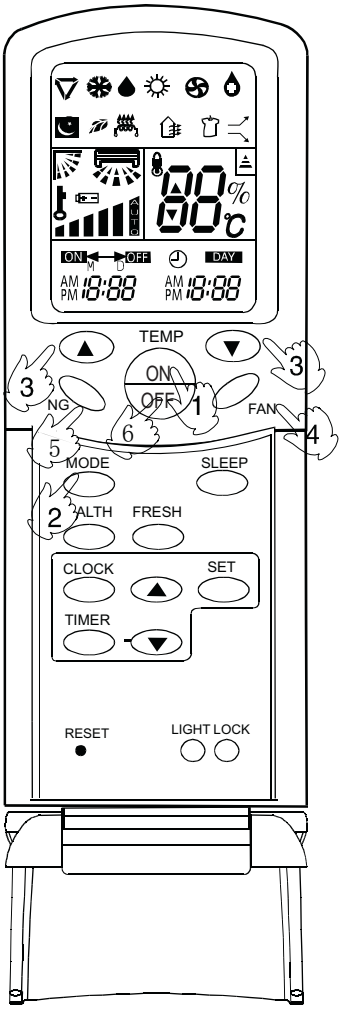

Note: 1) Several seconds later being controlled by the wired/remote controller, the unit state will change.
2) If the everyday requests (operation mode, set temp., fan speed) are the same, you only need to execute the first procedure ON/OFF. The wired/remote controller will display the previous state.

Remarks

- Avoid start/stop unit frequently.
- When selecting cooling/dry/heating mode, if the other indoors are in different modes, the indoor will be standby state and the operation mode icon on wired controller will flash.
- Do not press the buttons of controller.
- When pressing temp. UP/DOWN button, the unit maybe stop, it is not abnormal.
- In cooling/heating mode, though the room temp. may be lower/higher than the set temp, the unit will run in cooling/heating mode, it is not abnormal.
- In dry/demand mode, the unit will adjust the fan speed due to the indoor temp automatically, and can not be adjusted by the fan speed switch.
- When wired controller is electrified for the first time, the controller will display all info for 2 seconds, then LED and CLOCK area will change:"8888"→"888" →"88"→"8" and flash for about 30 seconds, all buttons are invalid.
- If indoor fan speed is admired to be fixed, the fan speed can not be changed, wired controller will display "FIX".

(3) Set the present time

The TIMER setting is based on the present time, so confirm the present time as the following:

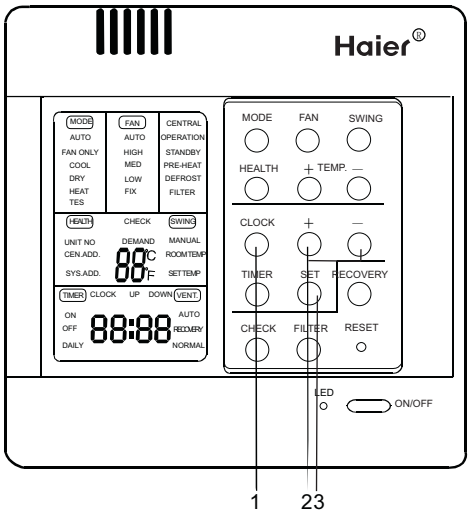

1 Press CLOCK button

CLOCK will flash, the display time is the present time.

2 Press "+" "-" button to adjust the time.

Press + once, the set time will increase 1 minute.

Press - once, the set time will reduce 1 minute.

3 Press SET button to confirm the time.

Note:

In non-timer state, LCD will display the clock.

If setting the timer, LCD will display the timer clock.

If it is necessary to check the present time, press clock button.

The clock adjustment for remote controller is in the next page.

How to cancel the auto restart function?
Wired control type unit: if J07 on wired controller PCB is short connected, auto restart function is unavailable; if J07 is disconnected, the auto restart function is available. Remote control type unit: press SWING button 10 times in 5 seconds, set or cancel the auto restart function. Being electrified after being powered off, if with auto restart function, the unit will resume the state before being powered off; or the unit will stop, press ON/OFF button back to the previous state.

(4) TIMER operation

TIMER OFF: when the set time has passed, the unit will stop;

TIMER ON: when the set time has passed, the unit will start up.

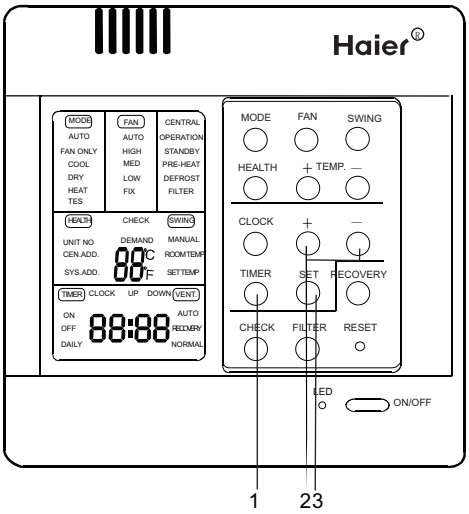

Firstly press ON/OFF button to start up the unit, then set the mode. Before setting TIMER, adjust the clock.

1 Press TIMER button

Wired controller will display the following, select one mode.

TIMER ON → TIMER OFF → TIMER ON / TIMER OFF → TIMER ON / TIMER OFF repeating → no display

Remote controller will display the following, select one mode.

ON (AM 12:00, TIMER ON) → OFF (PM 12:00, TIMER OFF) → ON (AM 12:00, TIMER ON) → OFF (PM 12:00, TIMER OFF) → no display

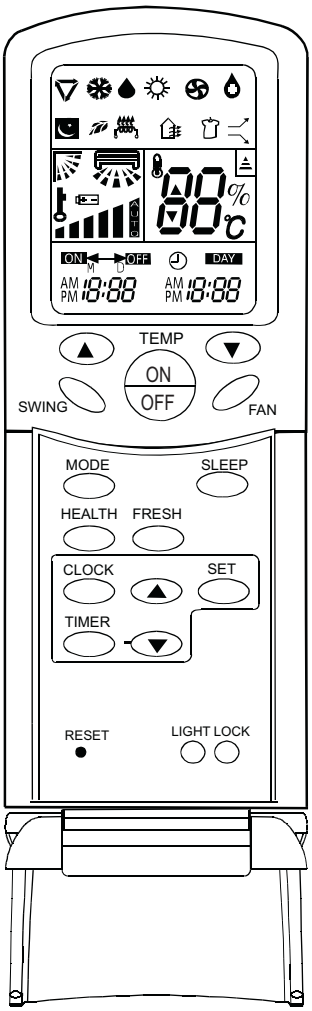

2 Set timing clock.

When TIMER ON/TIMER OFF flashes, for wired controller, press +, - button to adjust the clock; for remote controller, press▲▼to adjust the ON/OFF clock.

Press + once, the set time will increase 10 minute.

Press - once, the set time will reduce 10 minute.

If TIMER ON/OFF be set at the same time, press TIMER button to change the set item.

3 Press SET button to confirm the time.

Cancel TIMER

If you need to change the TIMER mode to the normal mode, press TIMER until there is no timing indication, then TIMER is cancelled.

Remarks for wired controller:

1. The unit will work/stop at the TIMER ON/OFF, meanwhile, the LCD will display the timing clock.
2. "TIMER ON, TIMER OFF repeating" means that the unit will work/stop at the set timing clock everyday.

NOTES

The system will execute the shorter time firstly.

If TIMER ON and TIMER OFF are at the same clock, the setting is invalid.

Even though the unit is set by timing, you can control the unit work/stop by ON/OFF button.

(5) Controller installation

Wired controller installation

A. Take down the top cover of wired controller

(PCB is in the wired controller, when taking down the top cover, take care not to damage PCB)

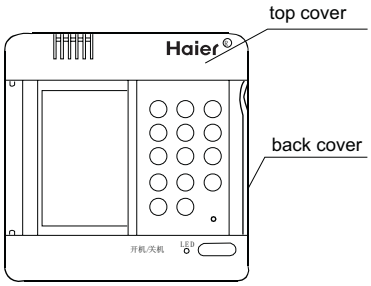

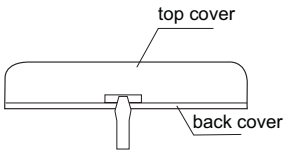

Insert the slotted head screw driver into the gap, turn the screw driver to separate top cover and back cover.

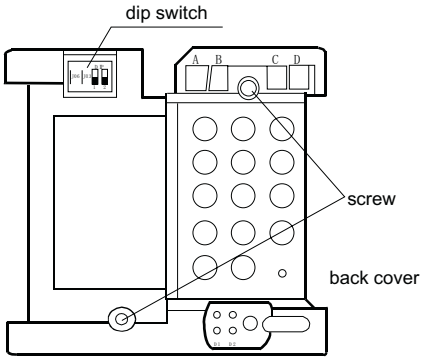

B. Install wired controller

Please drill two holes on the wall according to the back cover screw hole position of the wired controller, then strike the wood block to the holes respectively, then align the 2 screw hole of the wired controller back cover to the wood block, fasten the wired controller to the wall with wood screws.

Note: Better install the wired controller on the flat wall and do not fasten the wood screw with excessive force, or the wired controller will be damaged.

C. Dip switch

Refer to the dip switch information in the latter chapter.

D. Wiring method

● To control single unt with single wire (1 to 1)

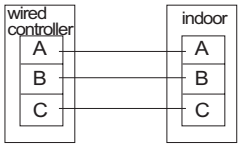

● Master/slave wired controller control single indoor (2 to 1)

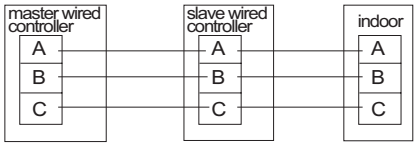

● Single wired controller controls multi indoors (1 to X)

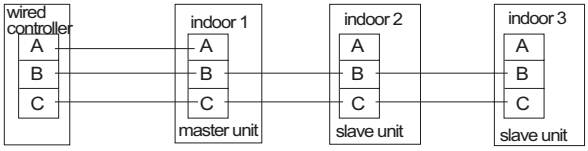

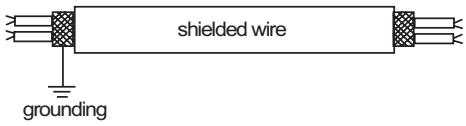

Note:

Use shielded wires for communication between wired controller and indoor unit;indoor unit and outdoor unit. Ground the shielded wire on outdoor communication wire side.Otherwise misoperation because of interference may occur.Confirm the terminal connectors are connected firmly and not touch with the shielded wire.

E. Replace the top cover of wired controller. Be careful not to press the wiring.

(6) Installation of remote receiver (used for low ESP duct, med ESP duct and high ESP duct unit)
Because of the temperature sensitive device, do not install the remote receiver at straight sunlight place, either in front of air outlet grill, for it is effected greatly from cool air and heat air, the remote receiver is at least 20mm distance to the air outlet grill.
Since there is light sensitive device which receives wireless remote signal, so do not installed behind the window curtain or other obstacles, in order not to obstruct the signal.
Must fix the remote control wire far from high voltage electricity (such as the wiring of electric light, air conditioner, etc.) and low voltage electricity (such as the wiring of telephone, interphone, etc.).

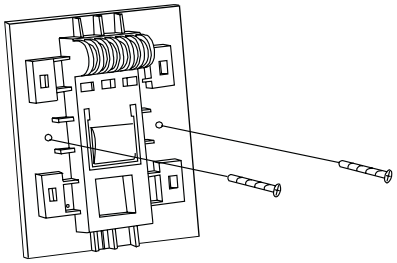

1.Fix the remote receiver with screws on the selected place

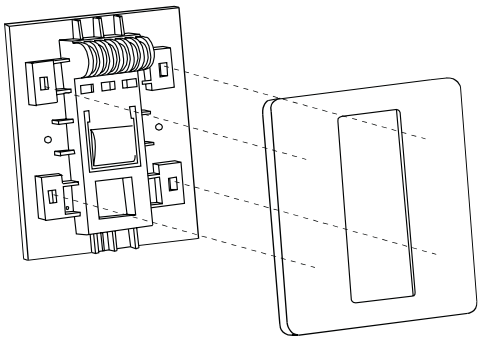

2.Place the panel onto the fixed frame, pay attention that the four claws must be placed into the corresponding four poles on the frame

Connecting wiring method of receiver :

Refer the indoor unit wiring diagram .
Safety cautions see the electrical wiring section .

(7)Installation dimension:

A. Wired controller installation dimension:

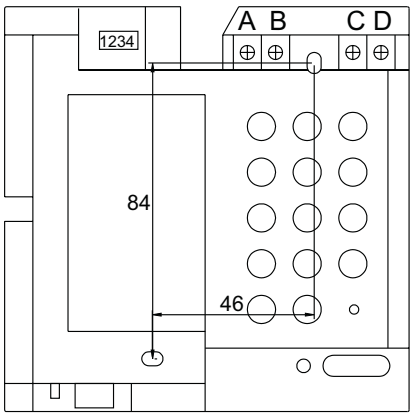

B. Remote receiver installation dimension:

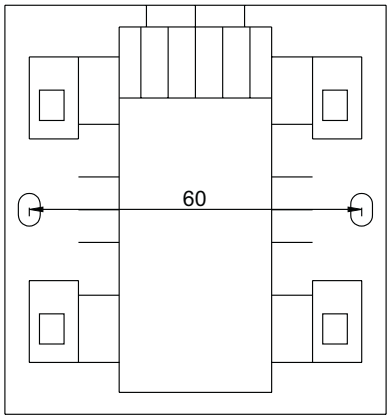

3.3 Circuit diagram

Outdoor wiring diagram

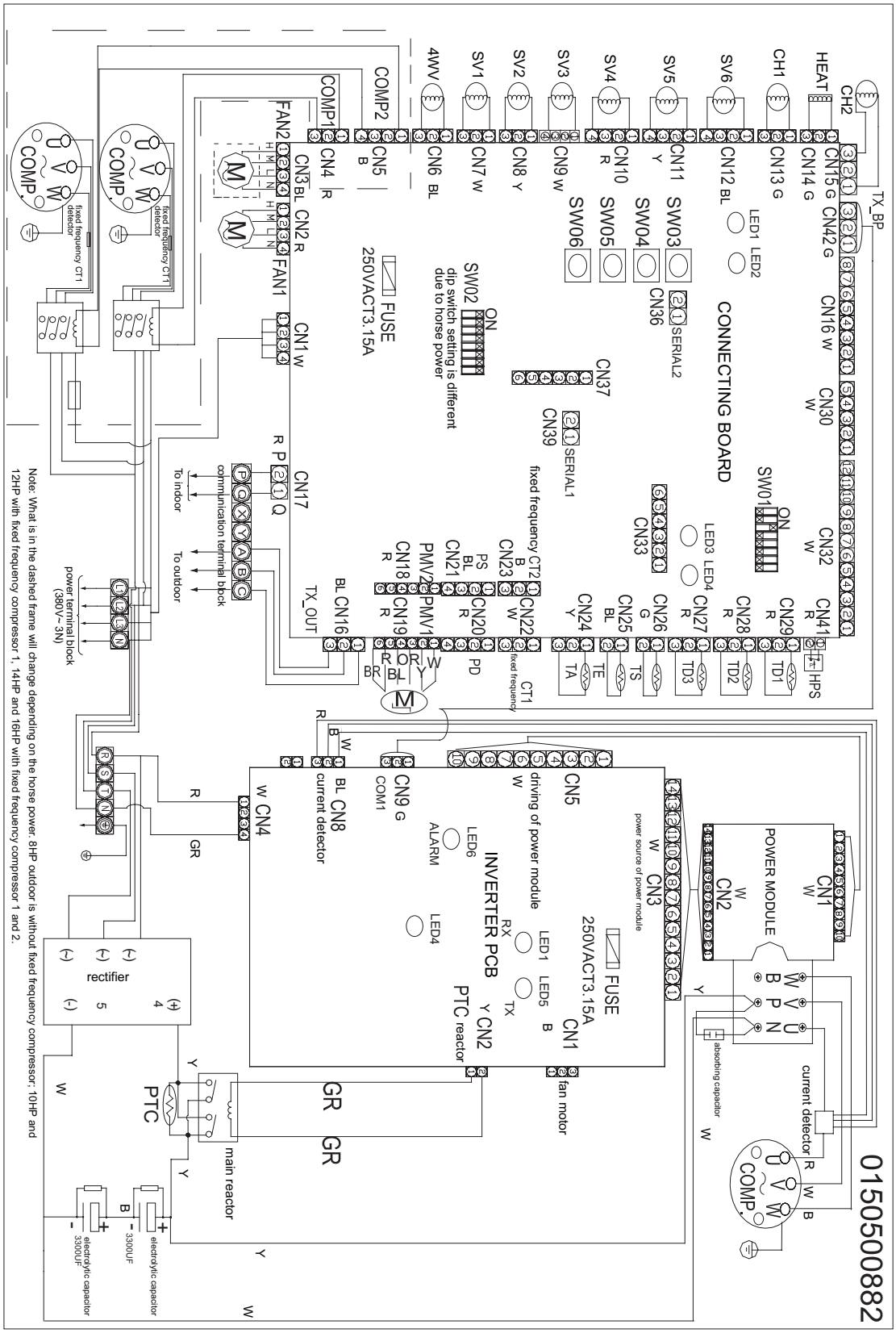

Low ESP duct type indoor unit:

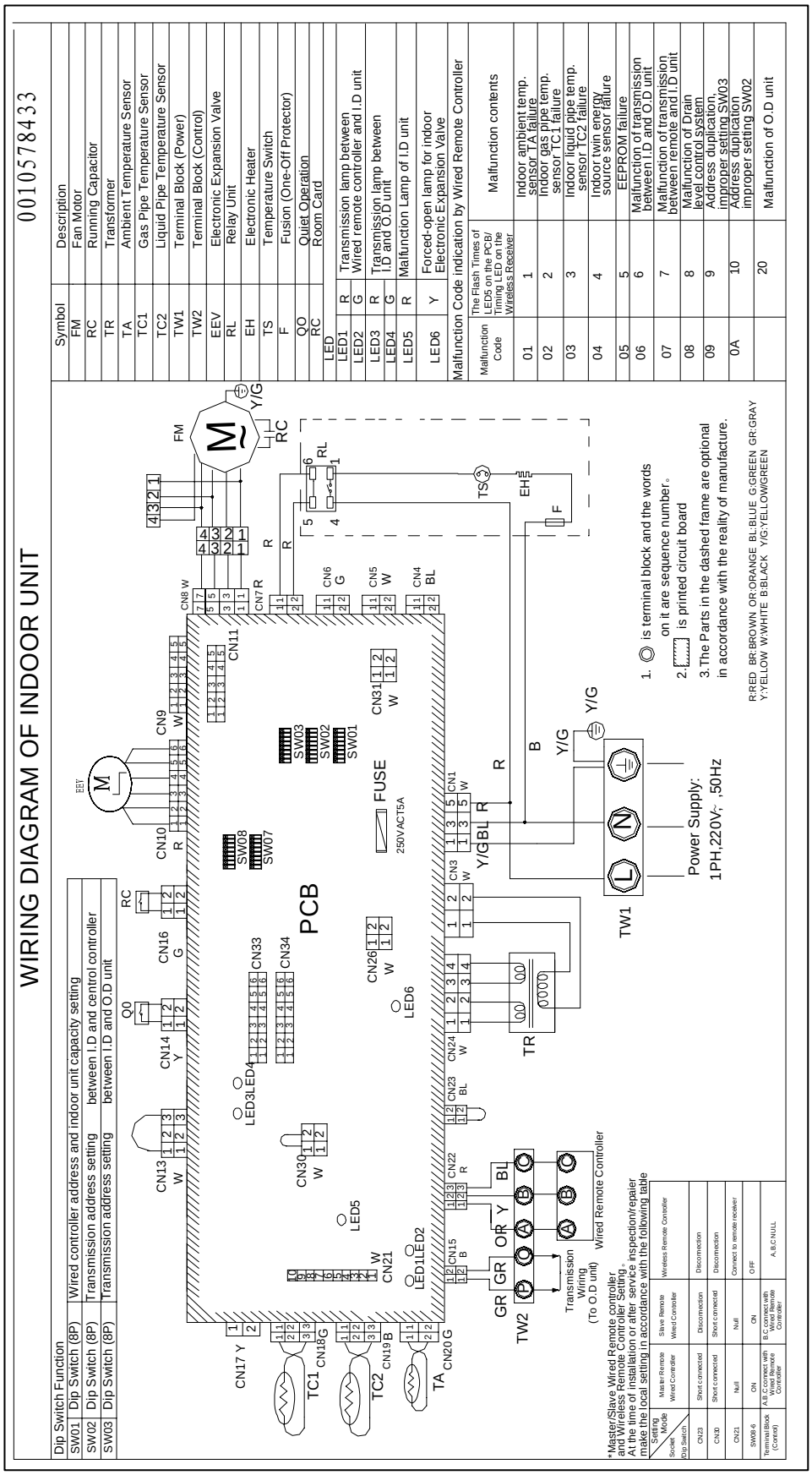

Med ESP duct type indoor unit

WIRING DIAGRAM OF INDOOR UNIT

0010578437

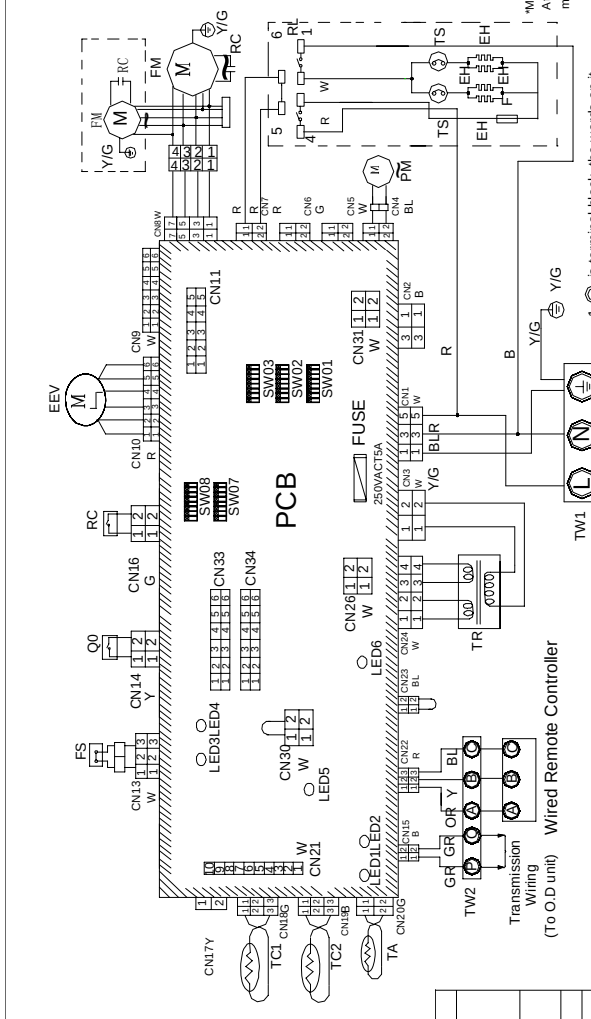

Malfunction Code indication by Wired Remote Controller

Malfunction Code	The Flash Times of LED5 on the the PCB/Timing LED on the Wireless Receiver	Malfunction Contents
01	1	Indoor ambient temp. sensor TA failure
02	2	Indoor gas pipe temp. sensor TC1 failure
03	3	Indoor liquid pipe temp. sensor TC2 failure
04	4	Indoor twin energy source sensor failure
05	5	EEPROM failure
06	6	Malfunction of transmission between I.D and O.D unit
07	7	Malfunction of transmission between rmote Controller and I.D unit
08	8	Malfunction of Drain level control system
09	9	Address duplication improper setting SW03
0A	10	Address duplication improper setting SW02
	20	Malfunction of O.D unit

*Master/Slave Wired Remote controller and Wireless Remote Setting
At the time of installation or after service inspection/repair make the local setting in accrodance with the following table

Setting Mode / Socket Dip switch	Master Remote Wired Controller	Slave Remote Wired Controller	Wireless Remote Controller
CN23	Short connected	Disconnected	Disconnected
CN30	Short connected	Short connected	Disconnected
CN21	Null	Null	Connect to remote receiver
SW08-6	ON	ON	OFF
Terminal Block (control)	A.B.C connect with Wired Remote Controller	B.C connect with Wired Remote Controller	A.B.C Null

Symbol	Description
FM	Fan Motor
RC	Running Capacitor
TR	Transformer
TA	Ambient Temperature Sensor
TC1	Gas Pipe Temperature Sensor
TC2	Liquid Pipe Temperature Sensor
TW1	Terminal block (Power)
TW2	Terminal block (Control)
EEV	Electronic Expansion Valve
FS	Float Switch
PM	Pump Motor
RL	Relay
QO	Quiet Operation
RC	Room Card

LED		
LED1	R	Transmission Lamp between
LED2	G	Wired remote controller and I.D Unit
LED3	R	Transmission Lamp between
LED4	G	I.D and O.D unit
LED5	R	Malfunction lamp for I.D unit
LED6	Y	Forced-open lamp for indoor Electronic Expansion Valve

Dip Switch Function		
SW01	Dip switch (8HP)	Wired controller address and capacity setting of indoor unit
SW02	Dip switch (8HP)	Transmission address setting between I.D and central controller
SW03	Dip switch (8HP)	Transmission address setting between I.D and O.D unit

4-way cassette unit (below 2HP)

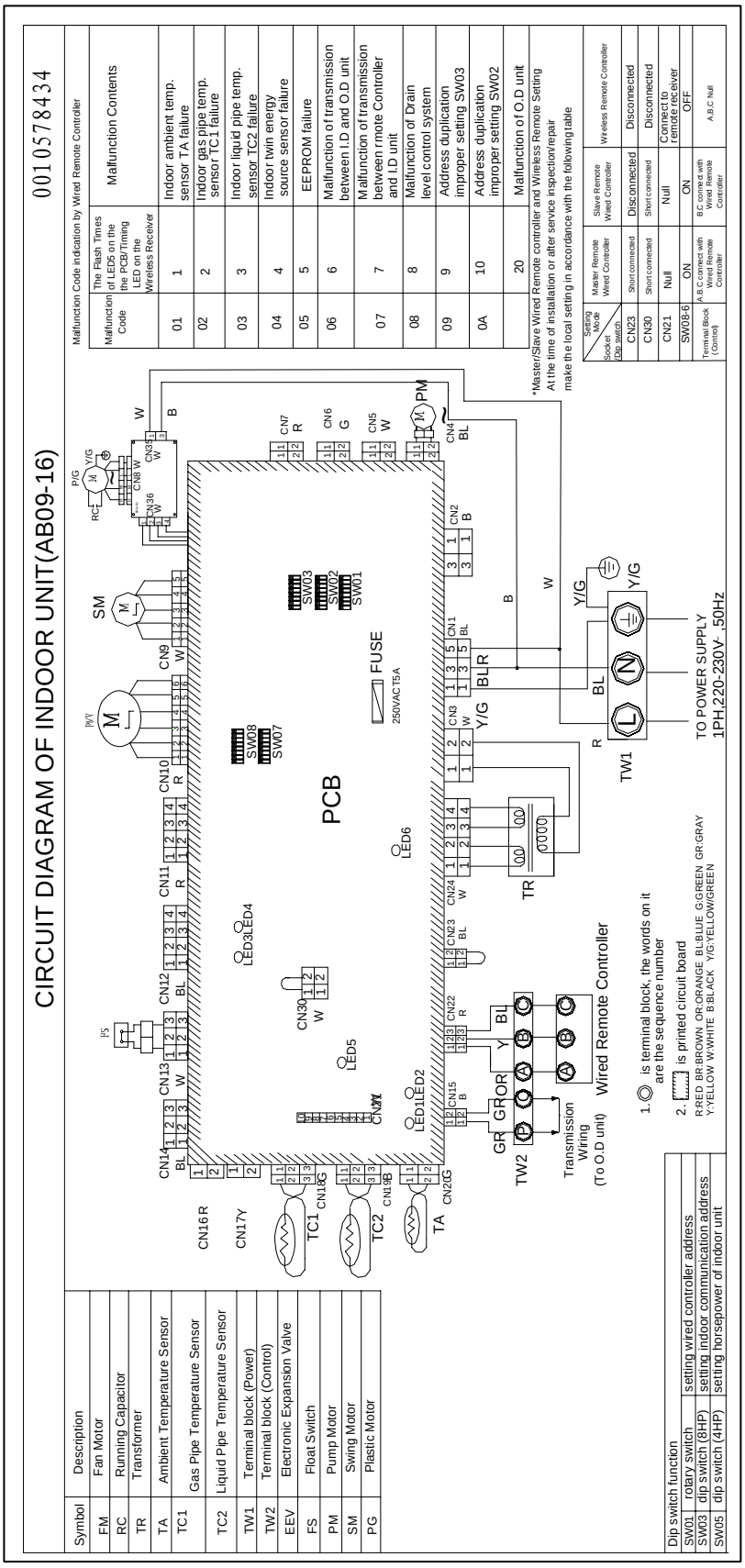

4-way cassette unit (more than 2HP)

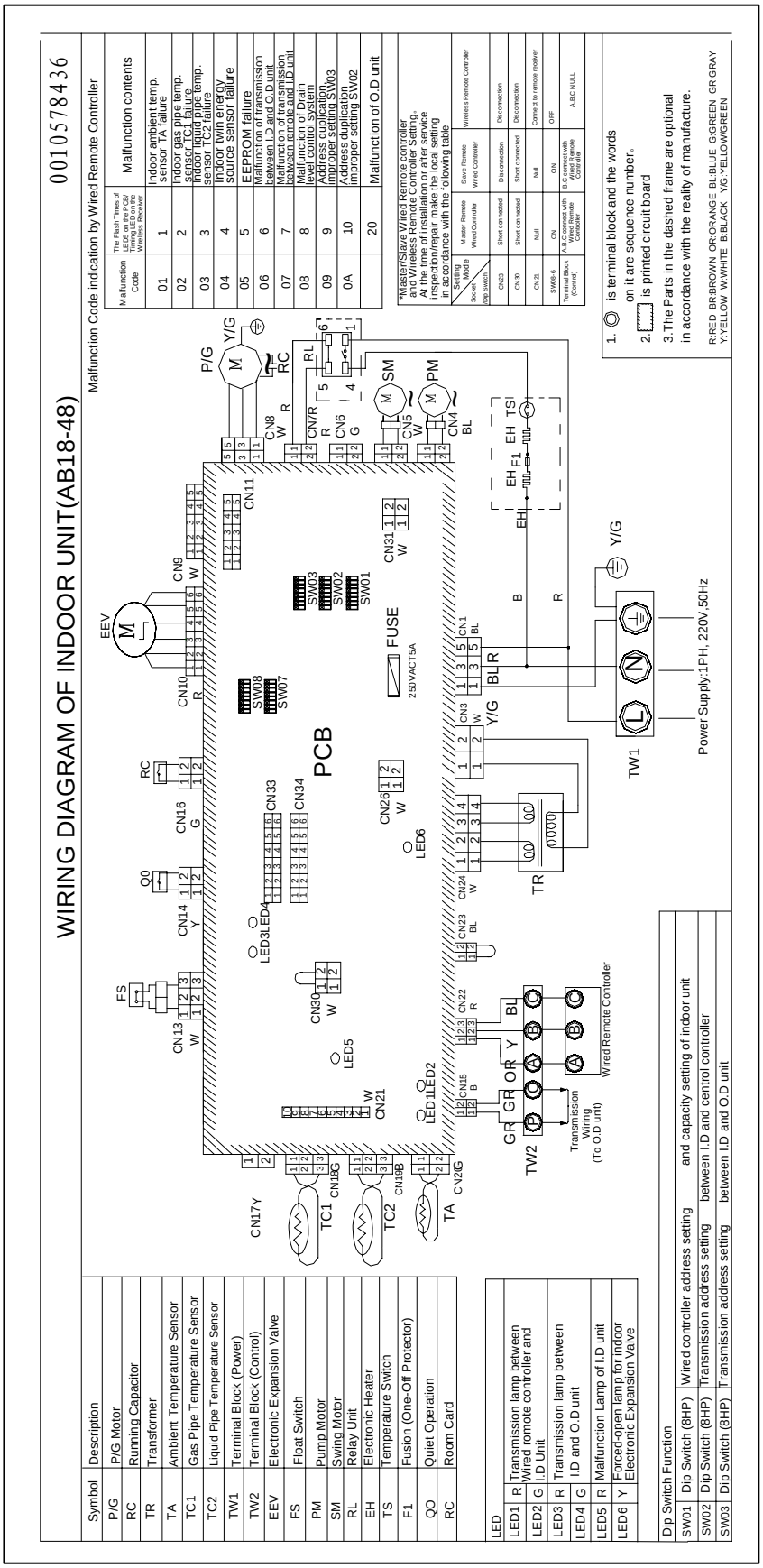

WIRING DIAGRAM OF INDOOR UNIT

0010578435

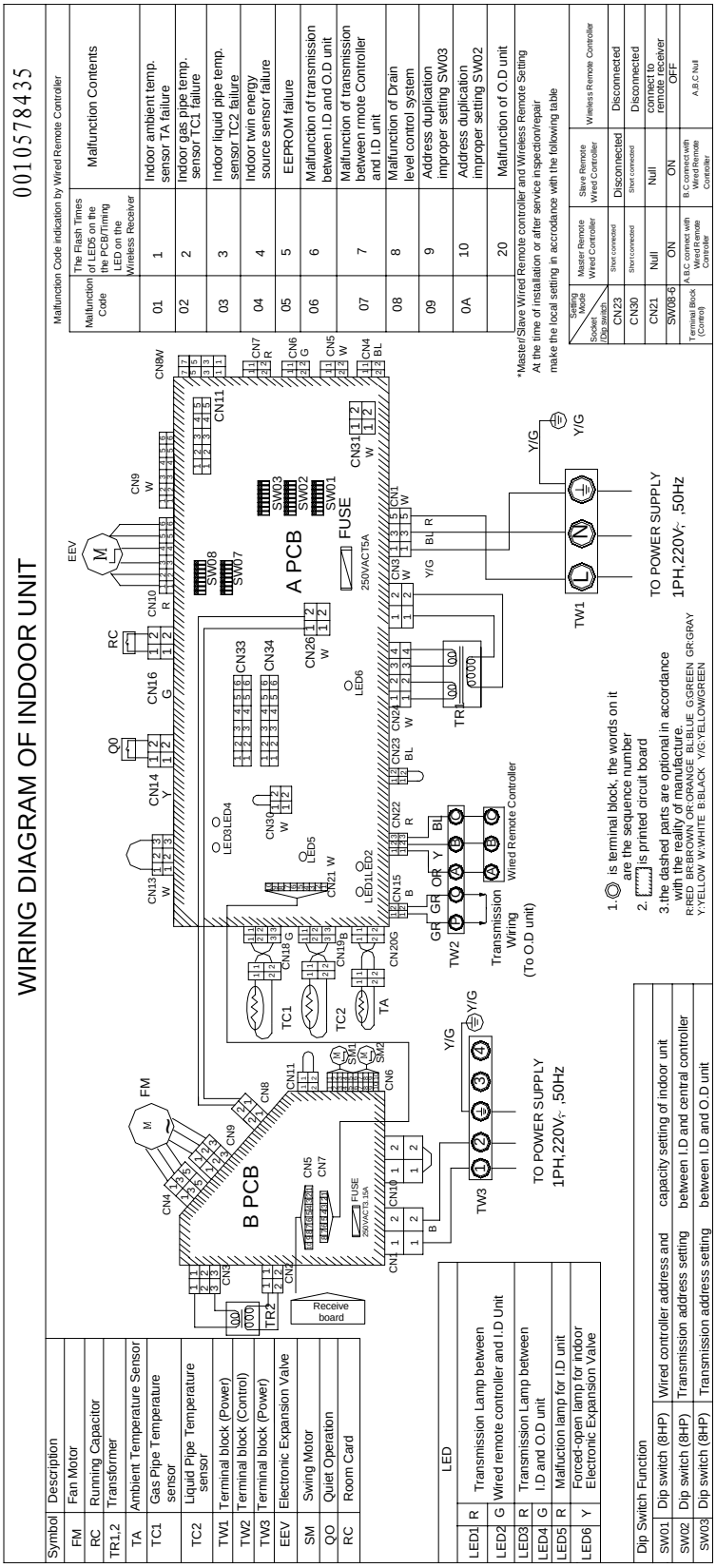

Malfunction Code indication by Wired Remote Controller

Malfunction Code	The Flash Times of LED5 on the the PCB/Timing LED on the Wireless Receiver	Malfunction Contents
01	1	Indoor ambient temp. sensor TA failure
02	2	Indoor gas pipe temp. sensor TC1 failure
03	3	Indoor liquid pipe temp. sensor TC2 failure
04	4	Indoor twin energy source sensor failure
05	5	EEPROM failure
06	6	Malfunction of transmission between I.D and O.D unit
07	7	Malfunction of transmission between rmote Controller and I.D unit
08	8	Malfunction of Drain level control system
09	9	Address duplication improper setting SW03
0A	10	Address duplication improper setting SW02
	20	Malfunction of O.D unit

*Master/Slave Wired Remote controller and Wireless Remote Setting
At the time of installation or after service inspection/repair make the local setting in accrodance with the following table

Setting Mode / Socket / Dip switch	Master Remote Wired Controller	Slave Remote Wired Controller	Wireless Remote Controller
CN23	Short connected	Disconnected	Disconnected
CN30	Short connected	Short connected	Disconnected
CN21	Null	Null	connect to remote receiver
SW08-6	ON	ON	OFF
Terminal Block (Control)	A.B.C connect with Wired Remote Controller	B.C connect with Wired Remote Controller	A.B.C Null

Symbol	Description
FM	Fan Motor
RC	Running Capacitor
TR1,2	Transformer
TA	Ambient Temperature Sensor
TC1	Gas Pipe Temperature sensor
TC2	Liquid Pipe Temperature sensor
TW1	Terminal block (Power)
TW2	Terminal block (Control)
TW3	Terminal block (Power)
EEV	Electronic Expansion Valve
SM	Swing Motor
QO	Quiet Operation
RC	Room Card

LED

LED1	R	Transmission Lamp between
LED2	G	Wired remote controller and I.D Unit
LED3	R	Transmission Lamp between
LED4	G	I.D and O.D unit
LED5	R	Malfuction lamp for I.D unit
LED6	Y	Forced-open lamp for indoor Electronic Expansion Valve

Dip Switch Function

SW01	Dip switch (8HP)	Wired controller address and capacity setting of indoor unit
SW02	Dip switch (8HP)	Transmission address setting between I.D and central controller
SW03	Dip switch (8HP)	Transmission address setting between I.D and O.D unit

High duct unit

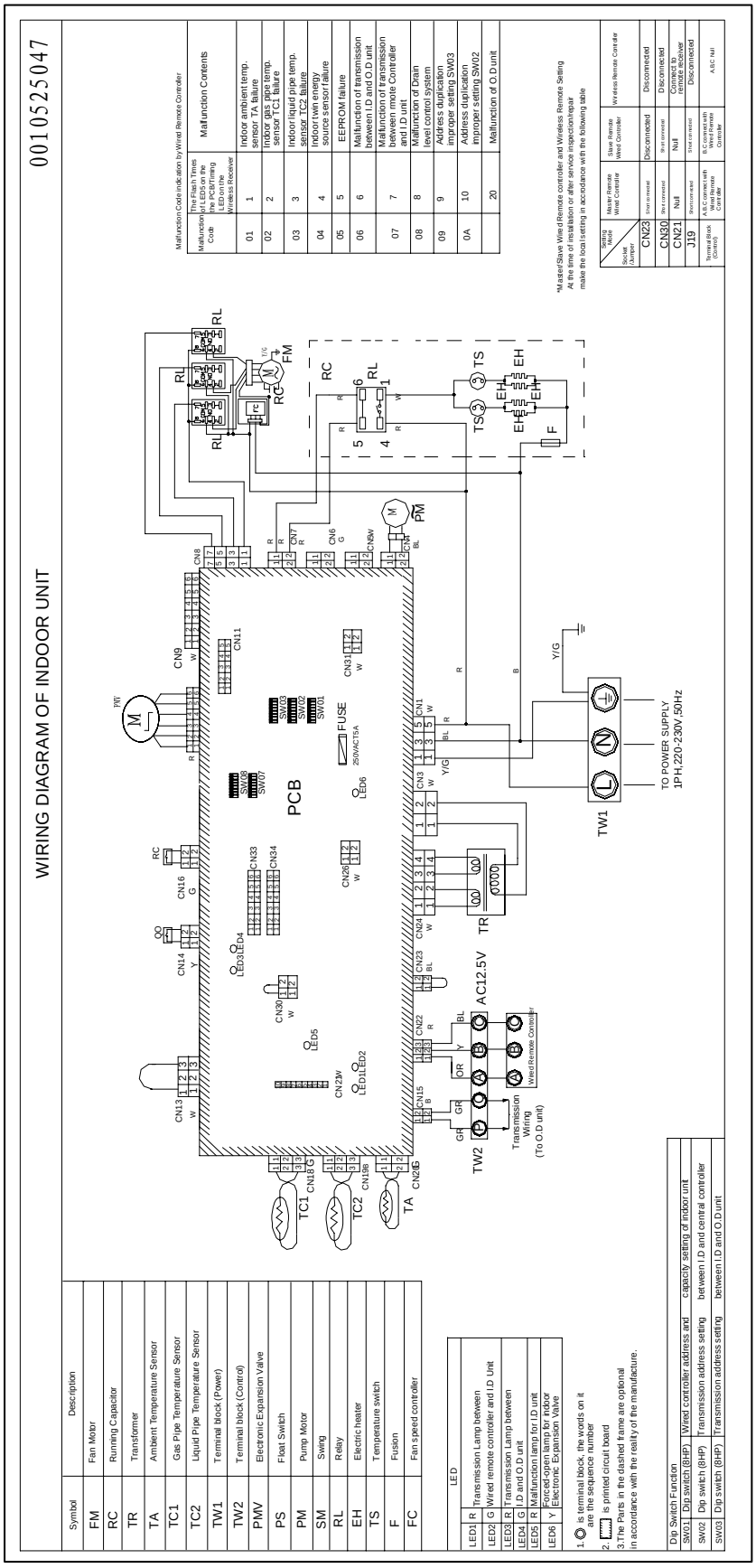

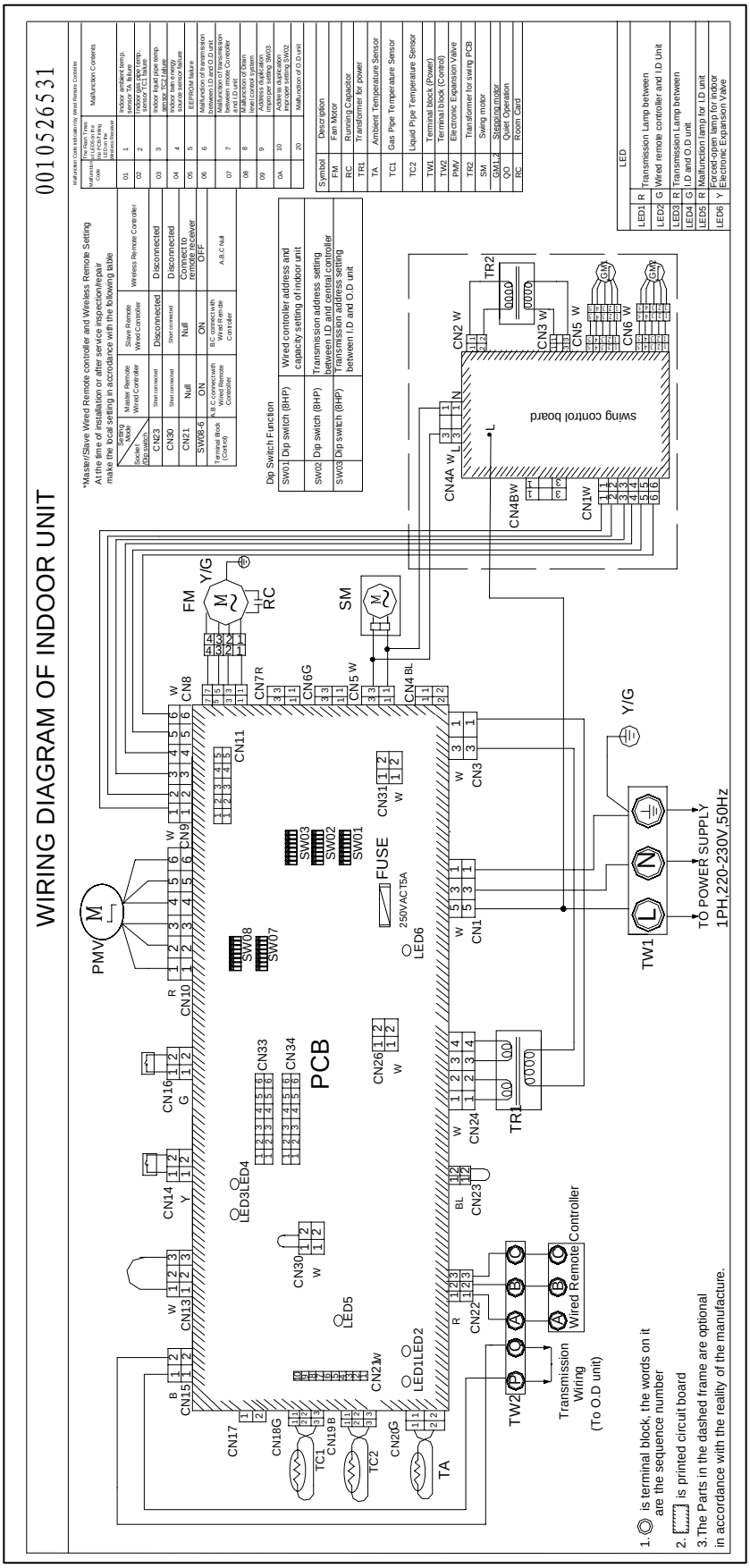
WIRING DIAGRAM OF INDOOR UNIT
001052653 1
*Master/Slave Wired Remote controller and Wireless Remote Setting
At the time of installation or after service inspection/repair,
make the local setting in accordance with the following table
Setting Mode / Socket Dip switch
Master Remote Wired Controller
Slave Remote Wired Controller
Wireless Remote Controller
CN23 Short connected Disconnected Disconnected
CN30 Short connected Disconnected Disconnected
CN21 Null Null Connect to remote receiver
SW08-6 ON ON OFF
Terminal Block (Control) B.C.D Connect with Wired Remote Controller B.C.D Connect with Wired Remote Controller A.B.C Null
Dip Switch Function
SW01 Dip switch (8HP) Wired controller address and capacity setting of indoor unit
SW02 Dip switch (8HP) Transmission address setting between I.D and central controller
SW03 Dip switch (8HP) Transmission address setting between I.D and O.D unit
Malfunction Code indicated by Wired Remote Controller
Malfunction Code
The Red Flashing LED on the Wireless Receiving Unit
Malfunction Contents
01 1 Indoor ambient temp. sensor TA failure
02 2 Indoor pipe temp. sensor TC1 failure
03 3 Indoor liquid pipe temp. sensor TC2 failure
04 4 Indoor fan speed failure
05 5 EEPROM failure
06 6 Malfunction of transmission between I.D and O.D unit
07 7 Malfunction of transmission between more Controller and I.D unit
08 8 Malfunction of drain level control system
09 9 Address duplication, improper setting SW03
0A 10 Address duplication, improper setting SW02
20 Malfunction of O.D unit
Symbol Description
FM Fan Motor
RC Running Capacitor
TR1 Transformer for power
TA Ambient Temperature Sensor
TC1 Gas Pipe Temperature Sensor
TC2 Liquid Pipe Temperature Sensor
TW1 Terminal block (Power)
TW2 Terminal block (Control)
PMV Electronic Expansion Valve
TR2 Transformer for swing PCB
SM Swing motor
GM1,2 Stepping motor
QO Quiet Operation
RC Room Card
LED
LED1 R Transmission Lamp between Wired remote controller and I.D Unit
LED2 G
LED3 R Transmission Lamp between I.D and O.D unit
LED4 G
LED5 R Malfunction lamp for I.D unit
LED6 Y Forced-open lamp for indoor Electronic Expansion Valve
PMV
FM
Y/G
RC
SM
CN8
CN9
CN10
CN11
CN7R
CN6G
CN5 W
CN4BL
CN4A W
CN4B W
CN1W
CN2 W
CN3 W
CN6 W
TR2
GM1
GM2
swing control board
CN3
CN1
CN24
TR1
CN23
CN22
CN21W
CN20G
CN19B
CN18G
CN17
CN15
CN13
CN14
CN16
CN33
CN34
CN30
CN26
CN31
PCB
SW03
SW02
SW01
SW08
SW07
FUSE
250VAC T5A
LED6
LED3
LED4
LED5
LED1
LED2
TW1
TW2
TC1
TC2
TA
Y/G
TO POWER SUPPLY
1PH,220-230V,50Hz
Transmission Wiring (To O.D unit)
Wired Remote Controller
1. is terminal block, the words on it are the sequence number
2. is printed circuit board
3.The Parts in the dashed frame are optional in accordance with the reality of the manufacture.

Connecting board:

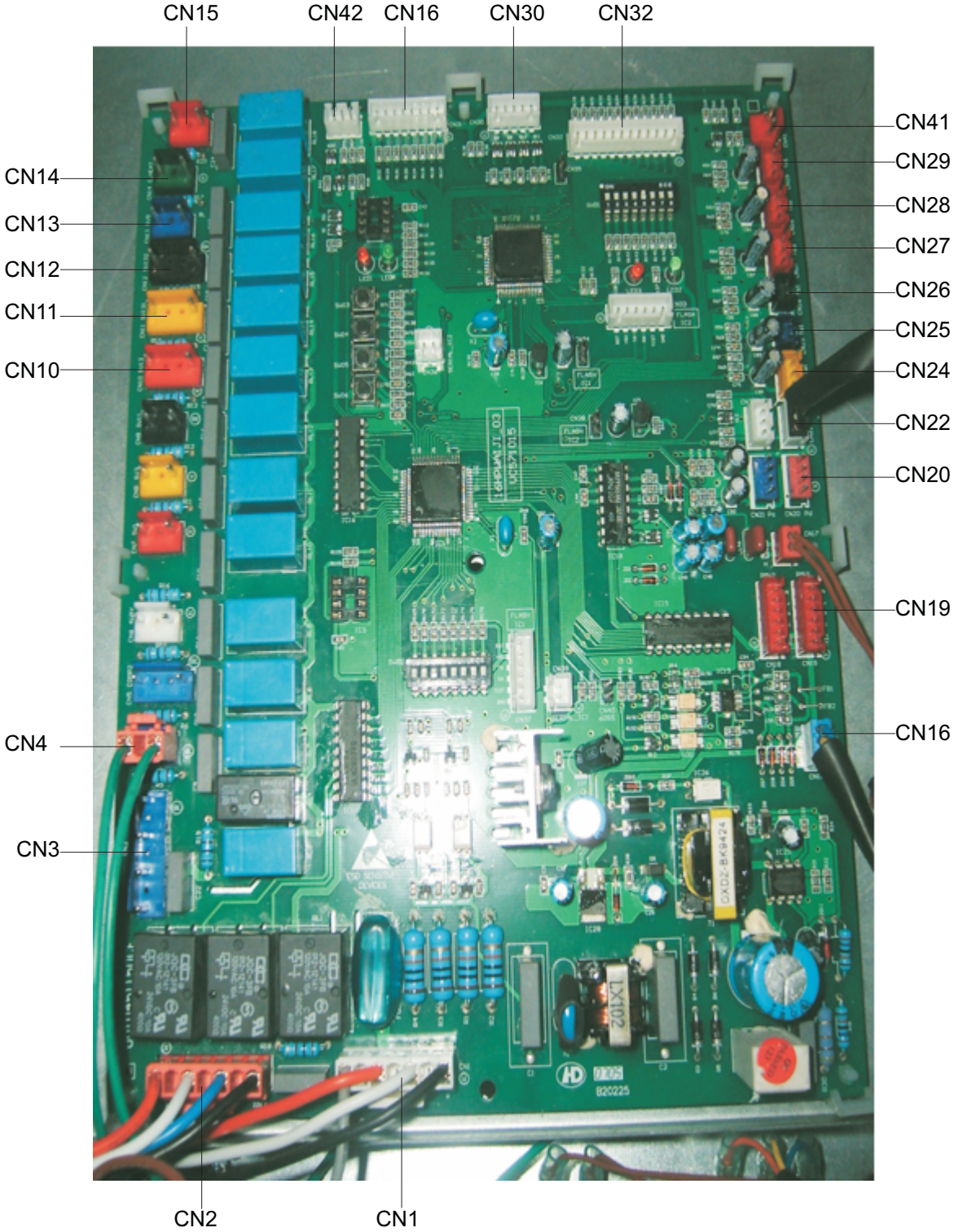

Inverter PCB:

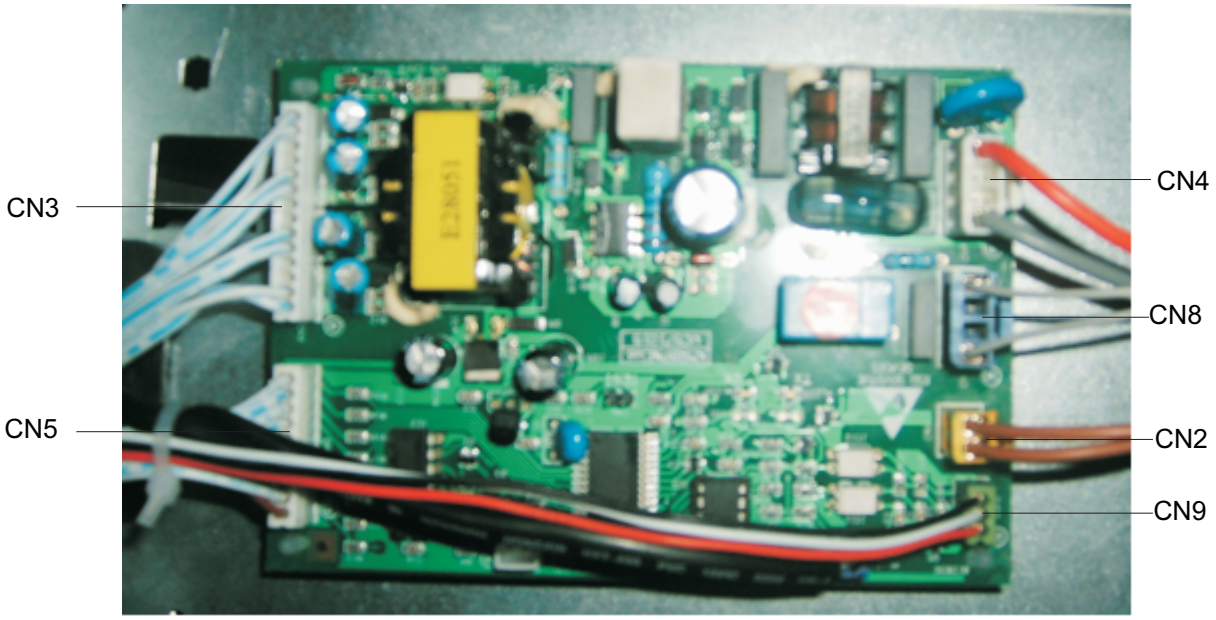

CT detector:

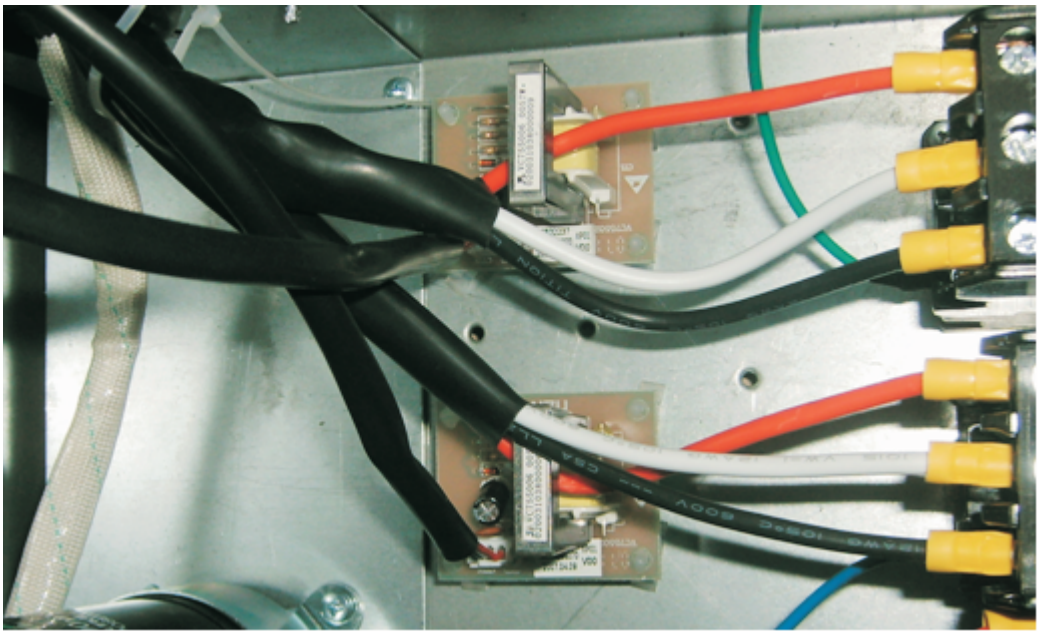

Indoor PCB:

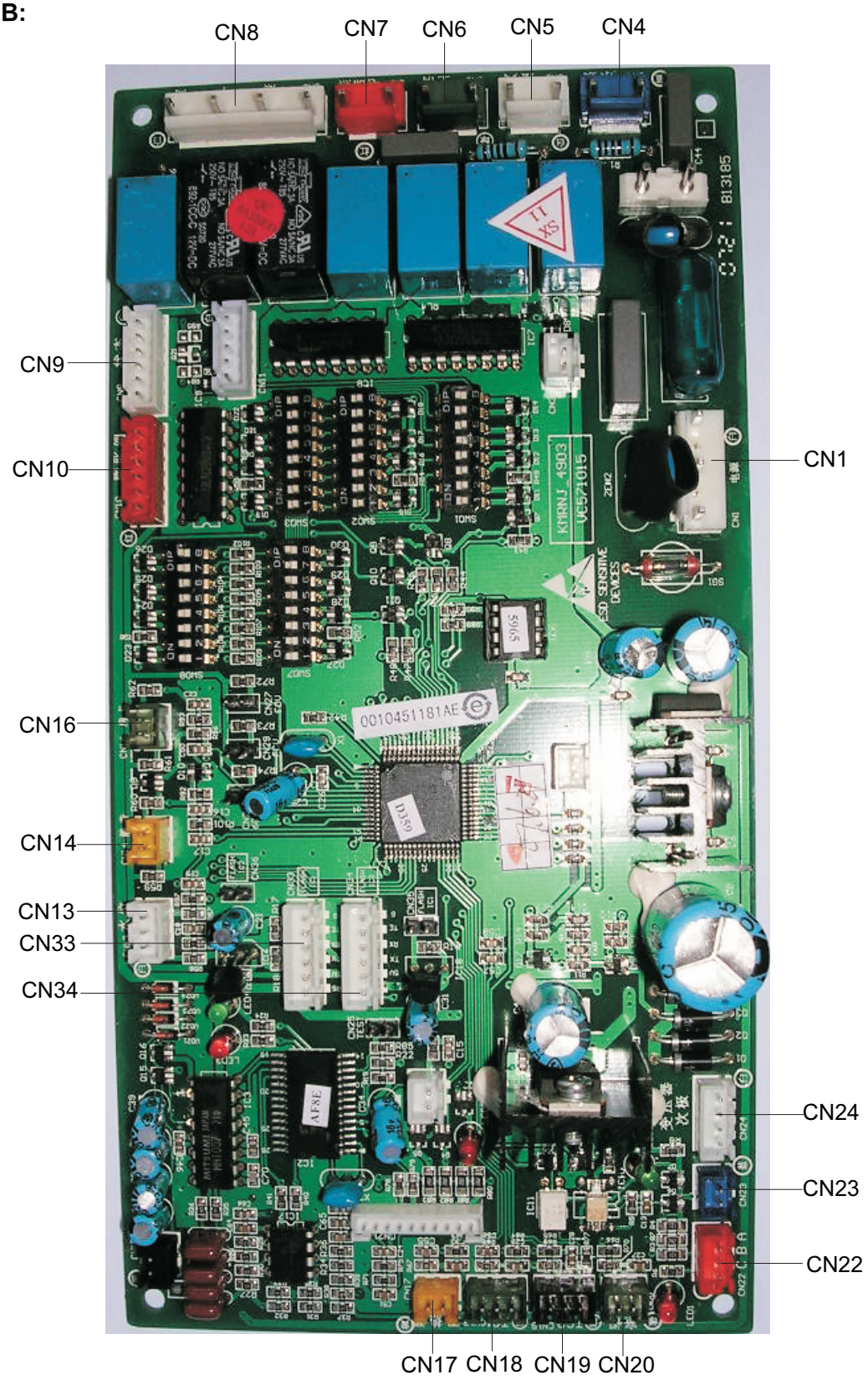
CN8
CN7
CN6
CN5
CN4
CN9
CN10
CN1
CN16
CN14
CN13
CN33
CN34
CN24
CN23
CN22
CN17
CN18
CN19
CN20

3.4 Electric installation

Electric wiring should be executed by the specialized well-trained person.
Warnings:
A. Do not take the other wire except for copper wire as the power cable.
B. All indoor/outdoor units must be connected with the earthing wire of power cable. The earthing wire can not be connected onto the earthing wire of coal gas pipe, water pipe, lightning rod, or telephone. Or the electric shock or fire will occur.
C. Must install the circuit breaker, or electric shock will occur.
D. Before finishing electric installation, do not electrify the unit.
E. Indoor and outdoor use their individual power source. The indoors connected to one outdoor must use one power source.
F. The communication wire and the power cable must be individual and can not use one multi-core cable, or the communication wire will be interfered to cause abnormal.
Note: When one wired controller controls multiple indoors, the connected indoor units must use the common phase of power source, or the communication will be abnormal.For example, the power source is L1,L2,L3,and N, all the indoor units must use L1/N or L2/N or L3/N.

1. Wiring system:

(1) Power wiring figure

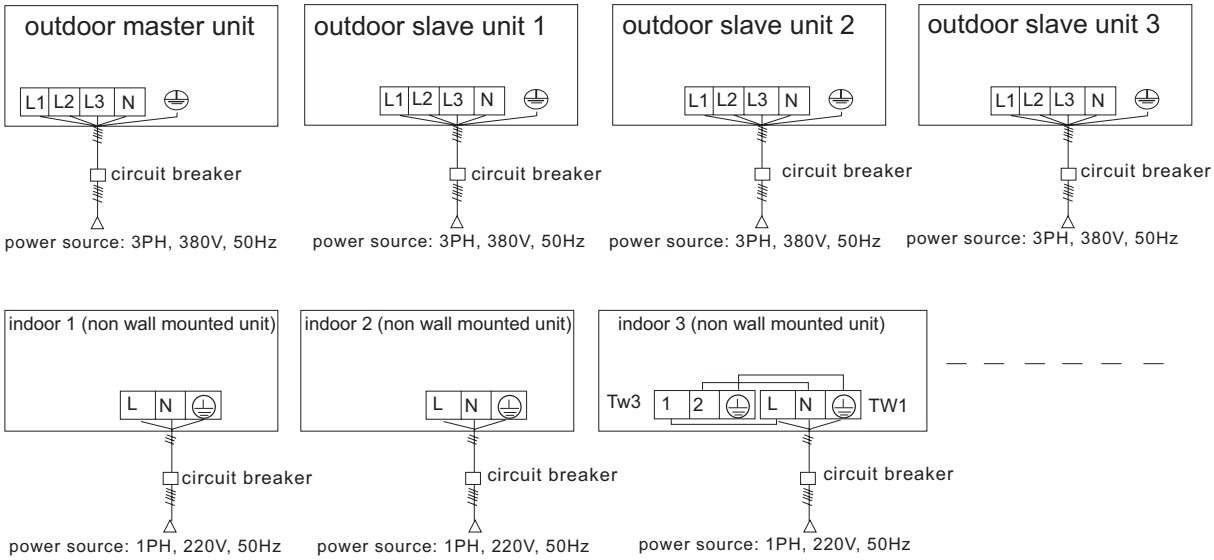

(2) Communication wiring figure

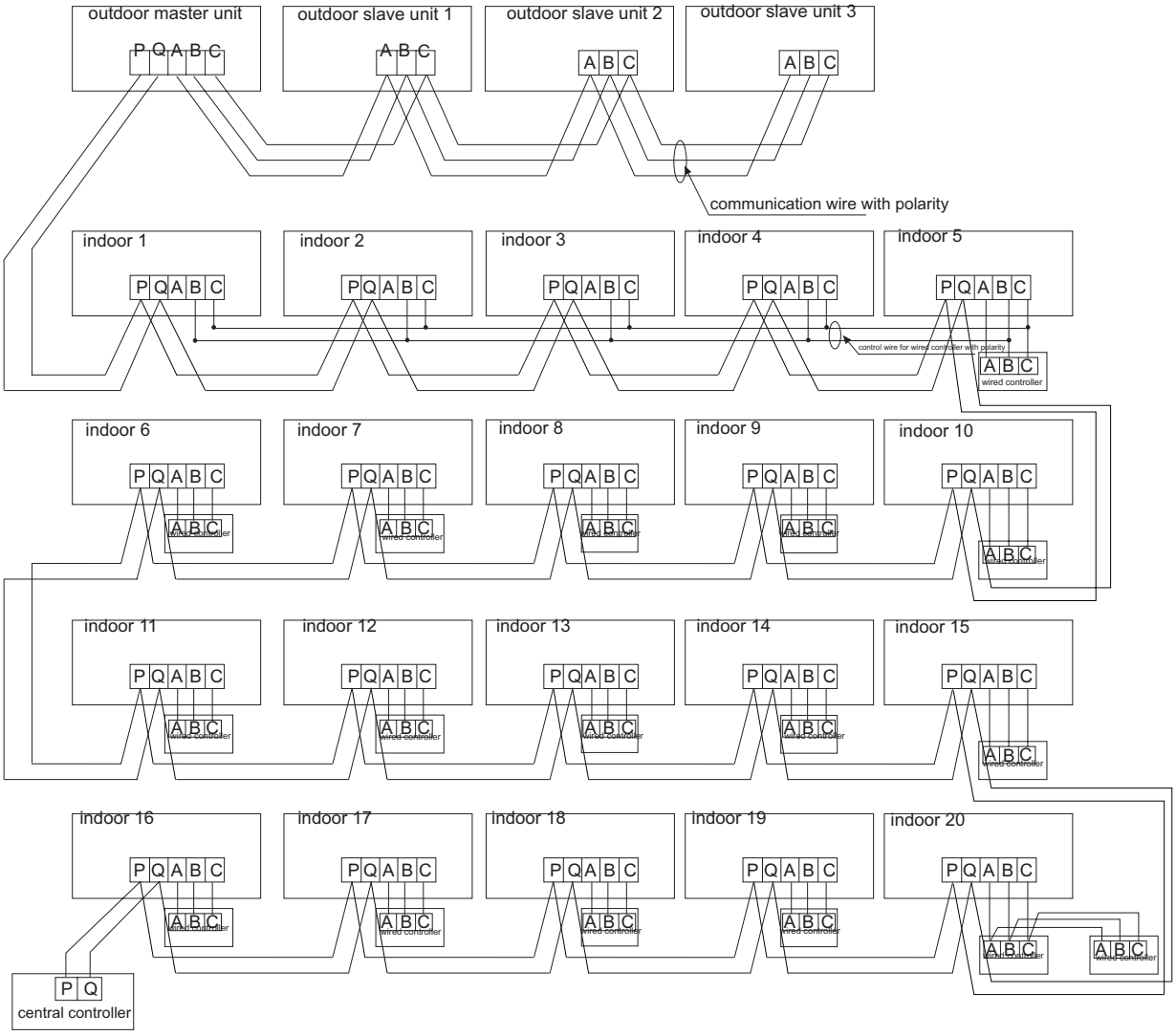

Outdoor untis are in parallel through 3 polar wires. The master unit, central controller and all indoor units are in parallel through 2 non-polar wires.

Three wiring methods between wired controller and indoor unit:

A. 1 to multi (group control): one wired controller controls 2~16 indoors, as shown in above figure, indoor 1~indoor 5: indoor 5 is wired control master unit, the others are wired control slave units. Wired controller and the master indoor (directly connected to wired controller) is connected by 3 polar wires; the slave indoors and the master indoors are connected by 2 polar wires; SW01 of the wired control master unit is at 0 position, and SW01 of all wired control slave units is at 1, 2, 3, etc in order (refer to dip switch setting on Page 26).

B. 1 to 1 (one wired controller controls one indoor): as shown in above figure, indoor 6~ indoor 19, indoor and wired controller are connected by 3 polar wires.

C. 2 to 1 (two wired controller controls one indoor): as shown in above figure, indoor 20. Any of wired controllers can be set as master wired controller, and the other is slave wired controller. They are connected by 3 polar wires.

When indoor is controlled by remote controller, refer to the "wired control master unit/wired control slave unit/remote control unit table".A, B, C on signal terminal block need not wires and not connect the wired controller.

2. Specs for power cable and communication wire

(1) Outdoor power source and power cable

model \ item		power source	power cable section (mm2)	wire length (m)	circuit breaker(A)	earthing wire	
						section(mm2)	screw
individual power	master unit	3N~, 380V, 50Hz	10	45	40	3.5	M5
	slave unit		10	60	40		

a. Power cable must be fixed firmly.
b. Each outdoor must be earthed well.
c. When power cable exceeds the range, thichen it appropriately.
d. Shielded layer of communication wires of indoors and outdoors must be connected together and be earthed at single point on outdoor communication wire side.

(2) Indoor power source, communication wire between indoor and outdoor, among indoors

item / indoor total current (A)	power cable section (mm2)	wire length (m)	rated current of overcurrent breaker(A)	rated current of residual current circuit breaker(A) leakage current (mA) response time(s)	communication wire section	
					outdoor/indoor (mm^2)	indoor/indoor (mm^2)
〈10	2	20	20	20A, 30mA, below 0.1s	2-core * (0.75-2.0mm^2) shielded wire	
⩾10 and 〈15	3.5	25	30	30A, 30mA, below 0.1s		
⩾15 and 〈22	5.5	30	40	40A, 30mA, below 0.1s		
⩾22 and 〈27	10	40	50	50A, 30mA, below 0.1s		

a. Power cable and communication wire must be fixed firmly.
b. Each indoor must be earthed well.
c. When power cable exceeds the range, thichen it appropriately.
d. Shielded layer of communication wires of indoors and outdoors must be connected together and be earthed at single point on outdoor communication wire side.
e. Communication wire total length cannot exceed 1000m.

(3) Communication wire for wired controller

wire length(m)	wire spec	wire length(m)	wire spec
〈100	0.3mm^2 * (3-core) shielded wire	⩾300 and 〈400	1.25mm^2 * (3-core) shielded wire
⩾100 and 〈200	0.5mm^2 * (3-core) shielded wire	⩾400 and 〈600	2mm^2 * (3-core) shielded wire
⩾200 and 〈300	0.75mm^2 * (3-core) shielded wire		

a. Shielded layer of communication wire must be earthed at one end.
b. The total length cannot exceed 600m.

(4) Control type and the switchover

a) Indoor unit can be controlled by wired controller or remote controller.

b) When installation, the installer must set the unit due to the control type and wiring type.

Switchover between wired control master/slave unit /remote control unit, set when installation:

control type / socket /dip switch	wired control master unit	wired control slave unit	remote control
CN23	short connected	disconnected	disconnected
CN30	short connected	short connected	disconnected
CN21	blank	blank	to remote receiver
SW08-[6]	ON	ON	OFF
signal terminal block	A,B,C to wired controller	B,C to wired controller	A,B,C not to wired controller

3. Note: For the indoor unit controlled by wired controller, if indoor unit is with the remote receiver, MUST pull out the white wire from the remote receiver connector.

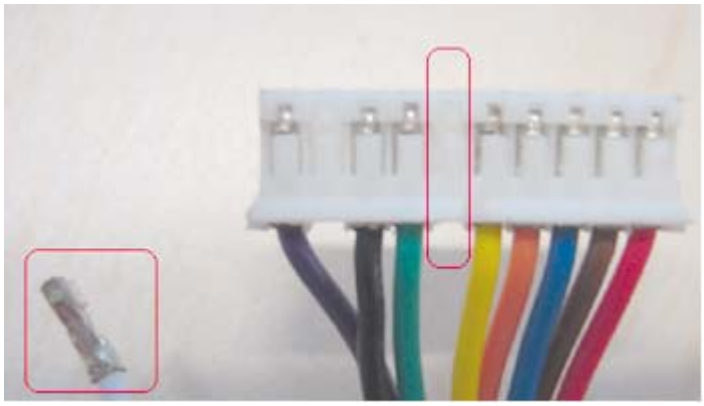

4. Note: Correct procedure to shut off the unit: switch off the unit by the controller, then cut off the power source. FORBIDDEN to cut off the power directly!

Debugging

4.1 Trial operation and the performance

4.2 Control function

4.3 Management system H-CACS

4.1 Trial operation and the performance

3-minute delay function

If starting up the unit after being powered off, the compressor will run about 3 minutes later against being damaged.

Cooling/heating operation

Indoor units can be controlled individually, but cannot run in cool and heat mode at the same time. If the cool mode and the heat mode are existing simultaneously, the unit set latter will be standby, and the unit set earlier will run normally. If the A/C manager sets the unit at cooling or heating mode fixedly, the unit can not run at the other modes.

Defrosting in heating mode

In heating mode, outdoor defrosting will affect the heating efficiency. The unit will defrost for about 2~10 minutes automatically, at this time, the condensate will flow from outdoor, also in defrosting, the vapour will appear at outdoor, which is normal. Indoor motor will run at low speed or stop, and outdoor motor will stop.

The unit operation condition

To use the unit properly, please operate the unit under the allowed condition range.
If operating beyond the range, the protection device will act.
The relative humidity should be lower than 80%. If the unit runs at the humidity over 80% for a long period, the dew on the unit will drop down and the vapour will be blowed from air outlet.

Protection device (such as high pressure switch)

High pressure switch is the device which can stop the unit automatically when the unit runs abnormally.
When the high pressure switch acts, the cooling/heating mode will stop but the running LED on wired controller will be light still. The wired controller will display failure code.
When the following cases occur, the protection device will act:
In cooling mode, air outlet and air inlet of outdoor are clogged.
In heating mode, indoor filter is sticked with duct; indoor air outlet is clogged.
When protection device acts, please cut off the power source and re-start up after eliminating the trouble.

When power is failure

When power is failure in running, all the operations will stop.
After being electrified again, if with re-satrt up function, the unit can resume to the state before power off automatically; if without re-satrt up function, the unti needs to be switched on again.
When abnormal occurs in running because of the thunder, the lightning, the interference of car or radio, etc, please cut off the power source, after eliminating the failure, press "ON/OFF" button to start up the unit.

Heating capacity

The heating mode adopts the heat pump type that absorbs outdoor heat energy and releases into indoor. So if outdoor temperature goes down, the heating capacity will decrease.

1. System marks

On the condition that multi MRV II systems are installed, in order to confirm the relationship between outdoor and indoor, please make marks on outdoor electric control box cover to indicate the connected indoor unit. As the below figure:

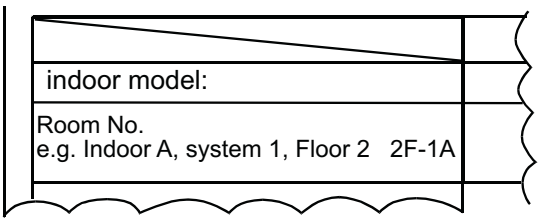

2. Trial operation

Before trial operation:

In the trial operation, confirm if the stop valves open fully (gas side, liquid side, oil equalization pipe). If there is only one outdoor, the oil equalization pipe should keep close, otherwise the compressor will be damaged.

Firstly connect the power cable and the communication wire due to the request. Then set the outdoor No. (master unit is 0, the slave units are respectively No. 1, No. 2), then set SW01-5 at OFF.

According to the actual pipe length, set SW01-1 and SW01-2.

Insert the digital indicator on the main PCB, and set SW1/SW2/SW3 on digital indicator at 0.

Before being electrified, measure the resistor between the power terminal block (L, N) and the earthing point with 500V ohmmeter. Confirm that the resistor should be over 1M ohm, if not, the unit can not work.

After the communication wire between indoor and outdoor is disconnected from PCB, check the power source. Observe the information on digital indicator. If it is 0000, that shows only master unit can be found; if it is 1111, that shows the master unit and No. 1 slave unit are found; 2222 shows the master unit and No. 1, No. 2 slave units are found. If the outdoor unit quantity is as the same as the actual, set SW01-5 at ON.

Check if the current parameters are correct by the digital indicator. SW1 is at 0, which will show the parameters and the failure code of main unit ; SW1 at 1 will show the parameters and the failure code of No.1 slave unit; SW1 at 2 will show the parameters and the failure code of No.2 slave unit.

Connect the indoor communication wire, then check if the indoor quantity showed in digital indicator is identical with the actual. Confirm the power source of all indoors is connected and use one power source. If power source of some indoors does not connect or use multiple power sources, electricity leakage or the other mechanical failure will occur.

Disconnect the communication wire between indoor and outdoor from PCB, and confirm the bottom of compressor become hot. In order to protect compressor, perform the trial operation after being electrified for 12 hours.

Trial operation

In trial operation, refer to the information of performance section. When the unit can not start up at the room temperature, make trial operation for outdoor.

3. Setting on field

(1) Outdoor dip switch setting

SW01 setting of connecting board

dip switch	SW01-1	SW01-2	SW01-3	SW01-4	SW01-5	SW01-6	SW01-7	SW01-8
setting	ON	ON	OFF	ON	ON	OFF	ON/OFF	ON/OFF
remarks	You can re-set it according to the actual pipe length				1. Single module only can be set as No. 0 2. Two modules only can be set as No. 0 and No. 1 3. Three modules only can be set as No.0, No.1 and No. 2 4. The No. 0 main unit must be the closest to the 1st gather pipe			

SW02 setting of connecting board

dip switch	SW02-1	SW02-2	SW02-3	SW02-4	SW02-5	SW02-6	SW02-7	SW02-8
setting				ON	ON	OFF	ON/OFF	ON/OFF
remarks	horse power setting: 8HP: OFF-OFF-OFF 10HP: OFF-OFF-ON 12HP: OFF-ON-OFF 14HP: OFF-ON-ON 16HP: ON-OFF-OFF			You can re-set it according to the actual drosting condition				

(1) Indoor dip switch setting

SW01 setting of PCB

dip switch	SW01
setting	0
remarks	when one wired controller controls multiple indoors, set the dip switch of all the slave units in one group at 1~15

SW02 setting of PCB

dip switch	SW02-1	SW02-2	SW02-3	SW02-4	SW02-5	SW02-6	SW02-7	SW02-8
setting	0	0	0	0	0	0	0	0
remarks	Set the dip switch according to the relative information when using central control function or BMS control							

SW03 setting of PCB

dip switch	SW03-1	SW03-2	SW03-3	SW03-4	SW03-5	SW03-6	SW03-7	SW03-8
setting	0	0	0	0	0	0	0	0
remarks	Set the dip switch according to the relative information when setting communication address by hand or wired controller							

SW05 setting of PCB

dip switch	SW05-1	SW05-2	SW05-3	SW05-4
setting	have been set when out of factory			

SW06 setting of PCB

dip switch	SW06-1	SW06-2	SW06-3	SW06-4	SW06-5	SW06-6	SW06-7	SW06-8
setting	1	1	1	1	1	1	1	1
remarks							setting temperature modification for the unit with remote controller or the unit only with central control function	

SW07 setting of PCB

dip switch	SW07-1	SW07-2	SW07-3	SW07-4	SW07-5	SW07-6	SW07-7	SW07-8
setting	1	1	1	1	1	1	1	1
remarks								

SW08 setting of PCB

dip switch	SW08-1	SW08-2	SW08-3	SW08-4	SW08-5	SW08-6	SW08-7	SW08-8
setting	1	1	1	1	1	1	1	1
remarks						at 0 for remote controller		

CN23 and CN30 setting of PCB

When being controlled by remote controller, pull off the jumper of CN23 and CN30 on PCB.

Definition of the indicators

indicator	color	function
LED1	red	indicator of communication with wired controller, shows signal is sent to wired controller
LED2	green	indicator of communication with wired controller, shows indoor receives signal from wired controller
		LED1, LED2 will be used in company. If communication between wired controller and indoor is normal, LED1 and LED2 will flash regularly. If there is slave unit of wired controller, LED1 will flash at low frequency
LED3	red	indicator of communication with outdoor, shows signal is sent to outdoor from indoor
LED4	green	indicator of communication with outdoor, shows indoor receives signal from outdoor
		LED3, LED4 will be used in company. If communication between outdoor and indoor is normal, LED3 and LED4 will flash regularly. Flash frequency of red indicator is lower than that of green indicator
LED5	red	normally it is OFF, confirm the failure due to indicator flash times
LED6	yellow	normally it is OFF, it will flash only when EEV is open or close fully

4. Inspection before being electrified

wires inspection: power cable, communication wire, earthing line → 1. If wiring conforms with regulation(power source of indoor and outdoor is individual. Indoor unit should use one power source)
2. If using the required wires.
3. If earthing wire is connected well(check the insulation resistor with 500V ohmmeter)
4. If screws are loose

↓

pipe inspection → 1. If pipe size is correct
2. If pipe heat insulation is firm, and the material is proper
3. If gas pipe, liquid pipe and oil equalization pipe can work normally

↓

refrigerant charging inspection → 1. If additional refrigerant is charged properly
2. If the amount of re-charged refrigerant has been recorded in the table

After inspection, fill in the table:

Confirmation Sheet 1

Rated current of residual current circuit breaker	outdoor ☐ A; outdoor group ☐ A
Power cable diameter	outdoor ☐ mm^2; outdoor group ☐ mm^2
Connection wire specs (indoor/outdoor communication wire: P,Q, shielded)	☐ mm^2
If indoor units power cable uses one power switch	☐ Yes ☐ No
If being earthed well	
If the insulation is good (resistor:10MΩ)	more than ☐ MΩ
If the voltage is normal (within 380V*10%)	☐ V
If the refrigerant pipe diameter is correct)	☐ Yes ☐ No
If the manifold pipes are correct	☐ Yes ☐ No
If the condensate drainage is fluent	☐ Yes ☐ No
If the heat insulation is in good condition (pipe connection section, manifold pipe)	☐ Yes ☐ No
If the air from indoor and outdoor is in short circuit	☐ Yes ☐ No
If the system is evacuated and charge the additional refrigerant	☐ Yes ☐ No
If the valves are open fully	☐ Yes ☐ No

Confirmation Sheet 2: additional refrigerant charge

total indoor quantity: pieces					
indoor address	indoor model	indoor location	indoor address	indoor model	indoor location

pipe length and additional charge amount			
liquid pipe	additional amount(kg)	liquid pipe	additional amount(kg)
∅6.35	0.03kg/m* m= kg	∅19.05	0.28kg/m* m= kg
∅9.52	0.06kg/m* m= kg	∅22.2	0.4kg/m* m= kg
∅12.7	0.12kg/m* m= kg	∅25.4	0.53kg/m* m= kg
∅15.88	0.2kg/m* m= kg		
total additional charge amount (kg)			
charge amount when out of factory(kg)		total charge amount (kg)	

5. Inspection before trial operation

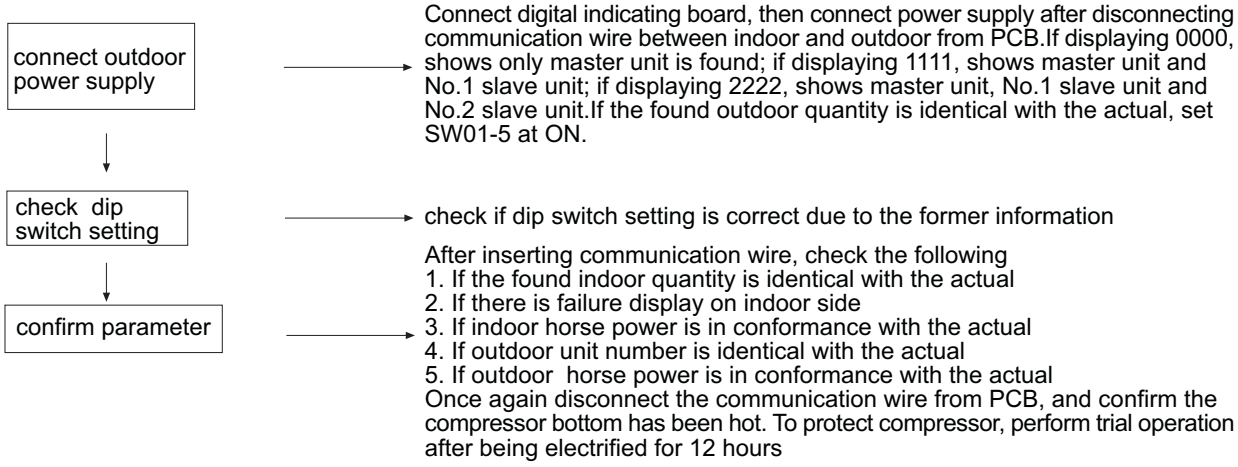

6. Trial operation confirmation

(1) Power supply and preliminary confirmation

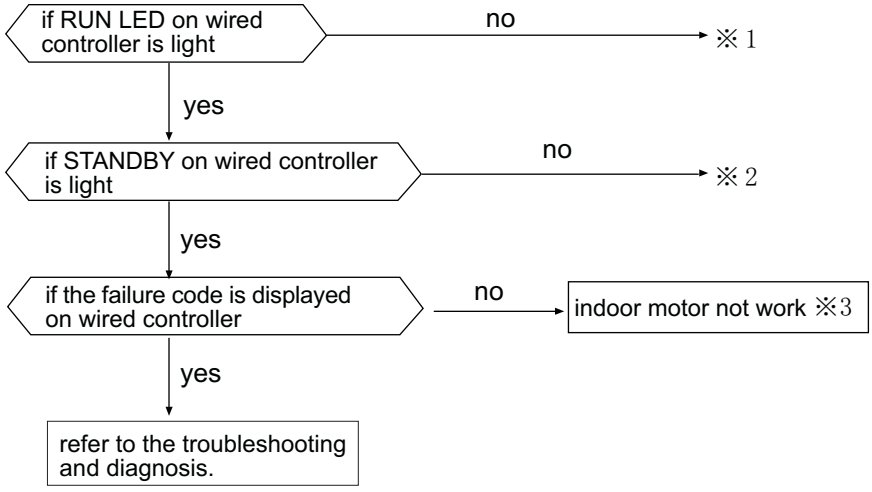

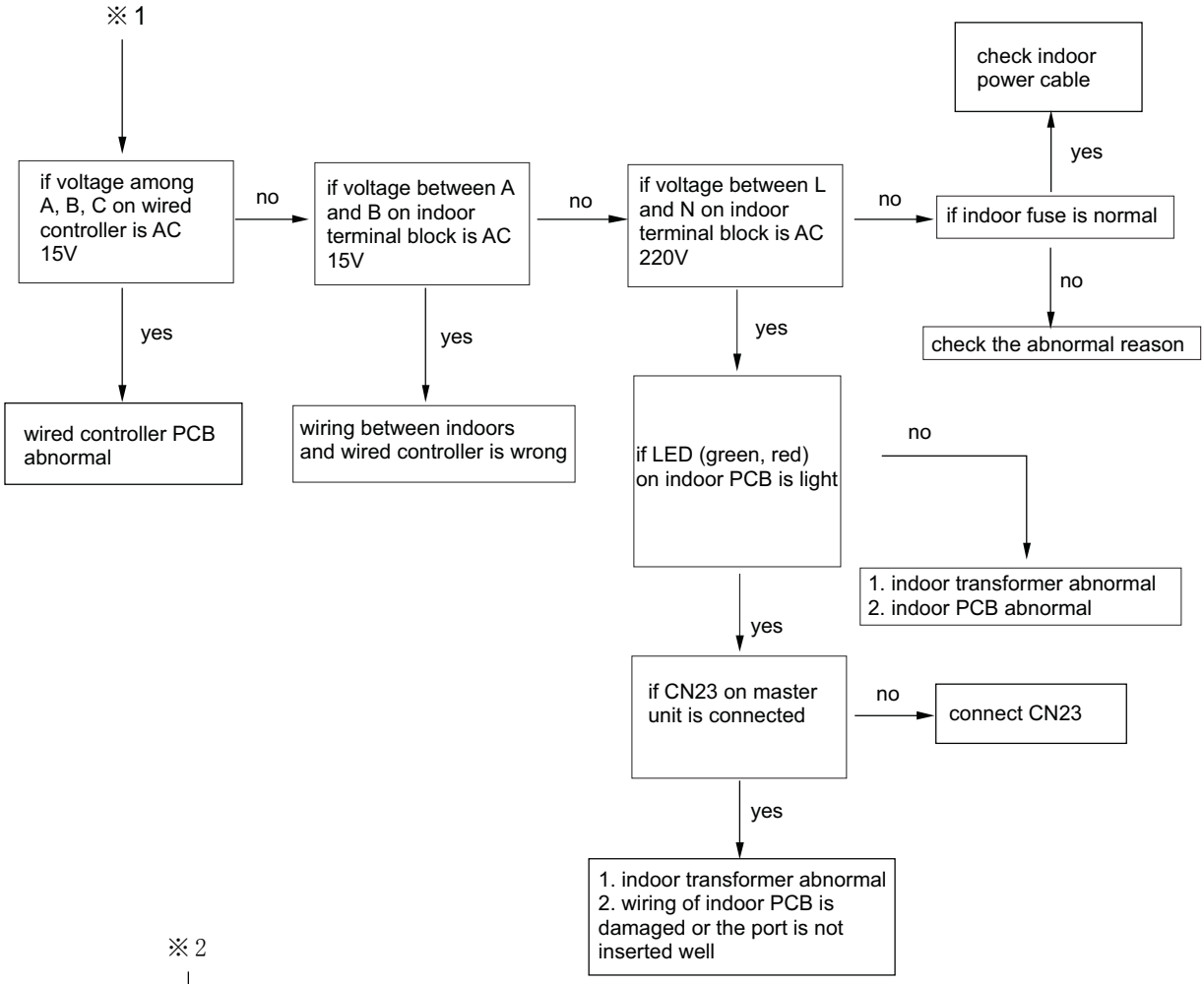
※1
if voltage among A, B, C on wired controller is AC 15V
no
if voltage between A and B on indoor terminal block is AC 15V
no
if voltage between L and N on indoor terminal block is AC 220V
no
if indoor fuse is normal
yes
check indoor power cable
no
check the abnormal reason
yes
wired controller PCB abnormal
yes
wiring between indoors and wired controller is wrong
yes
if LED (green, red) on indoor PCB is light
no
1. indoor transformer abnormal
2. indoor PCB abnormal
yes
if CN23 on master unit is connected
no
connect CN23
yes
1. indoor transformer abnormal
2. wiring of indoor PCB is damaged or the port is not inserted well

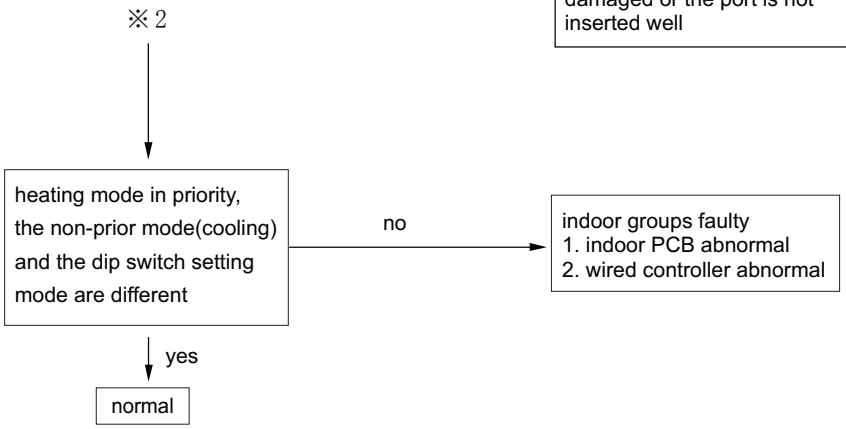
※2
heating mode in priority, the non-prior mode(cooling) and the dip switch setting mode are different
no
indoor groups faulty
1. indoor PCB abnormal
2. wired controller abnormal
yes
normal

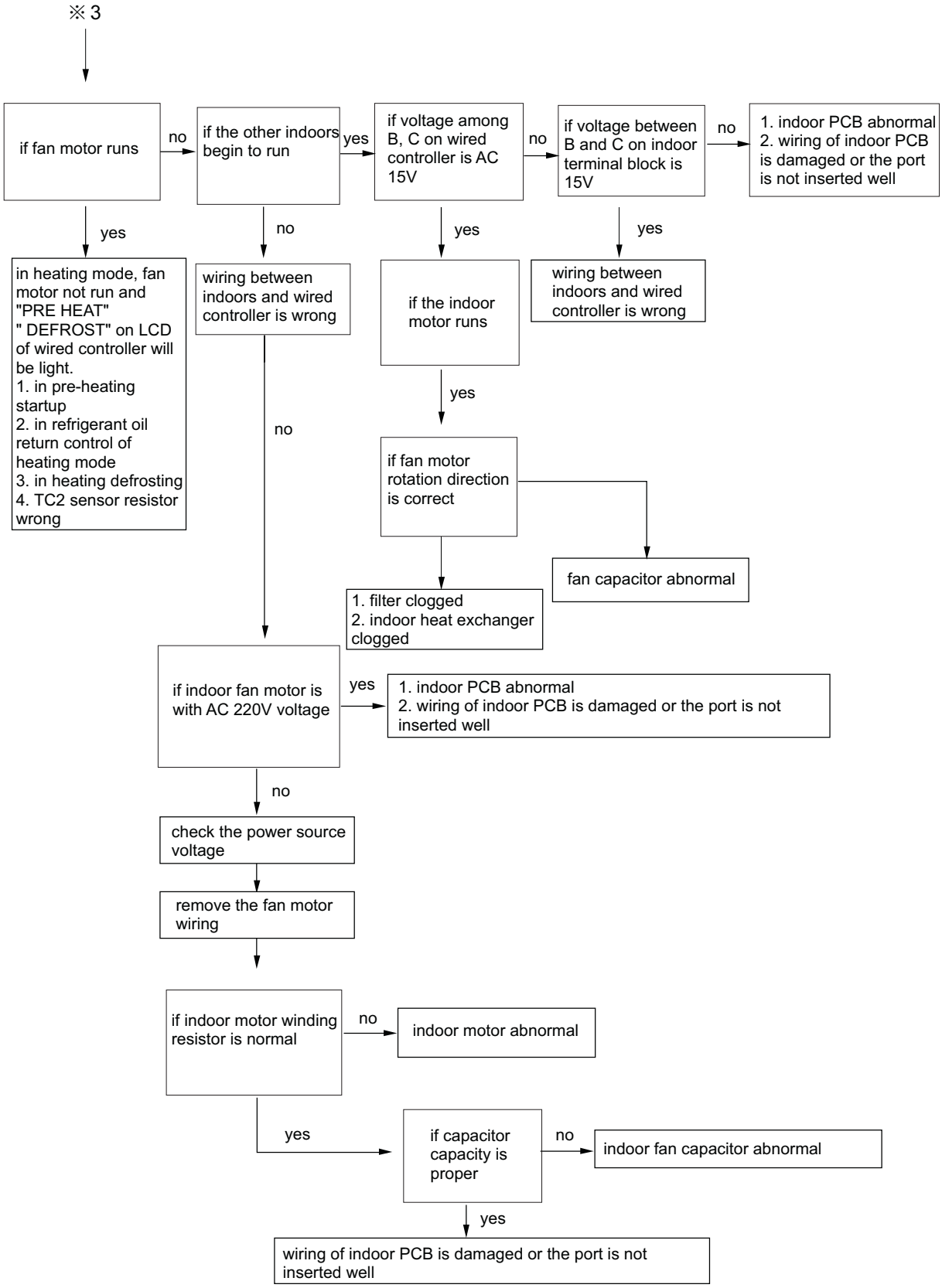
※3
if fan motor runs
no
if the other indoors begin to run
yes
if voltage among B, C on wired controller is AC 15V
no
if voltage between B and C on indoor terminal block is 15V
no
1. indoor PCB abnormal
2. wiring of indoor PCB is damaged or the port is not inserted well
yes
in heating mode, fan motor not run and "PRE HEAT" " DEFROST" on LCD of wired controller will be light.
1. in pre-heating startup
2. in refrigerant oil return control of heating mode
3. in heating defrosting
4. TC2 sensor resistor wrong
no
wiring between indoors and wired controller is wrong
yes
if the indoor motor runs
yes
wiring between indoors and wired controller is wrong
yes
if fan motor rotation direction is correct
fan capacitor abnormal
1. filter clogged
2. indoor heat exchanger clogged
no
if indoor fan motor is with AC 220V voltage
yes
1. indoor PCB abnormal
2. wiring of indoor PCB is damaged or the port is not inserted well
no
check the power source voltage
remove the fan motor wiring
if indoor motor winding resistor is normal
no
indoor motor abnormal
yes
if capacitor capacity is proper
no
indoor fan capacitor abnormal
yes
wiring of indoor PCB is damaged or the port is not inserted well

(2) Outdoor confirmation (cooling mode)

single indoor unit running →
1. If indoor EEV can open or close normally
2. If outdoor parameter is normal
3. If communication is normal
4. If failure occurs in operation

↓

all outdoor units running →
1. If indoor EEV can open or close normally
2. If outdoor parameter is normal
3. If communication is normal
4. If failure occurs in operation
5. If oil return capillary is clogged (temperature after the capillary will be higher)

(3) Outdoor confirmation (heating mode)

single indoor unit running →
1. If indoor coil temperature is normal and if EEV can open or close normally
2. If outdoor parameter is normal
3. If EEV or one-way valve of outdoor slave module (non-running) has leakage; if fan motor is running at low speed
4. If communication is normal
5. If failure occurs in operation

↓

all outdoor units running →
1. If indoor coil temperature is normal and if ambient temperature is correct
2. If outdoor parameter is normal
3. If communication is normal
4. If failure occurs in operation
5. If oil return capillary is clogged (temperature after the capillary will be higher)

(3) Indoor confirmation (cooling mode)

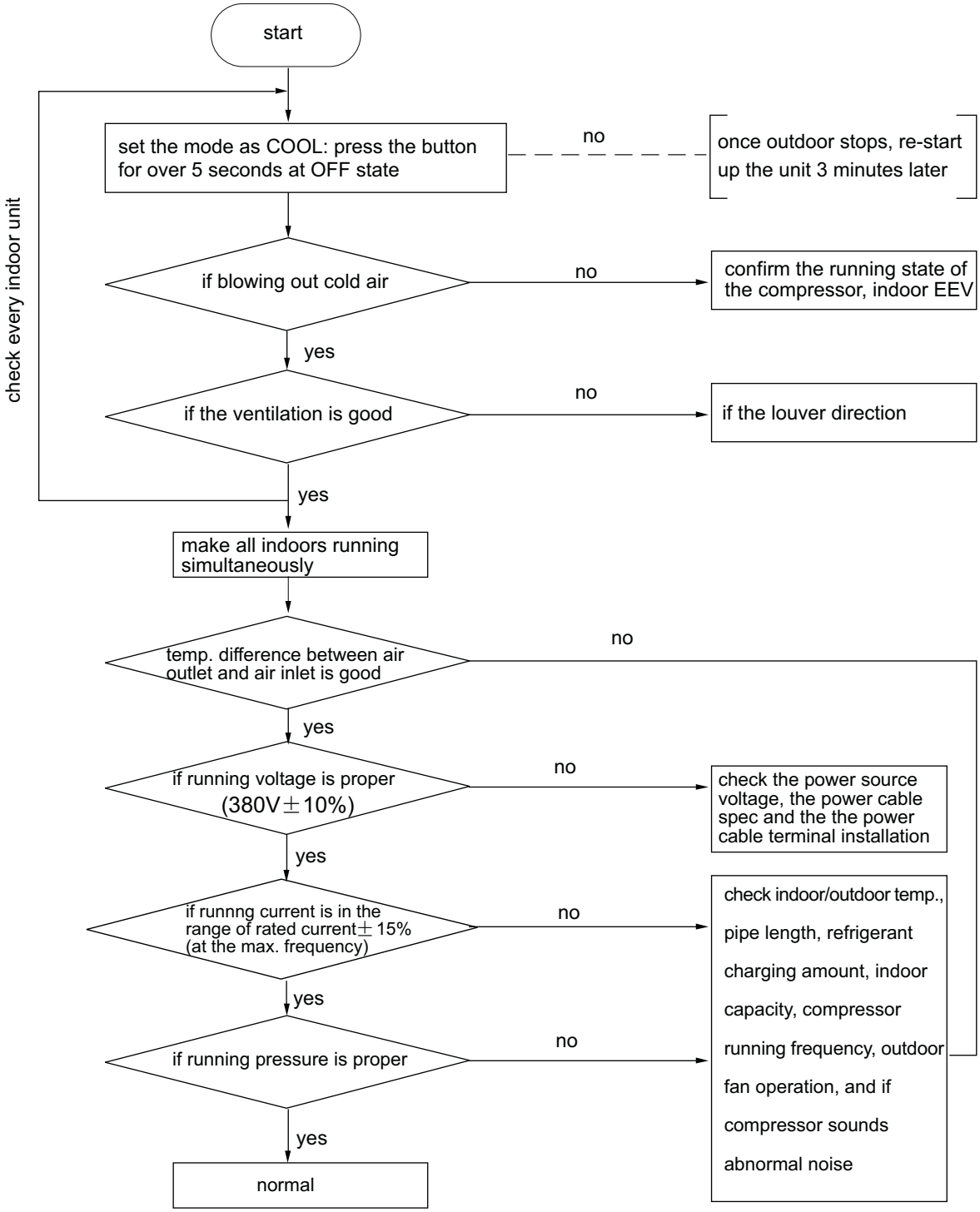

(4) Indoor confirmation(heating mode)

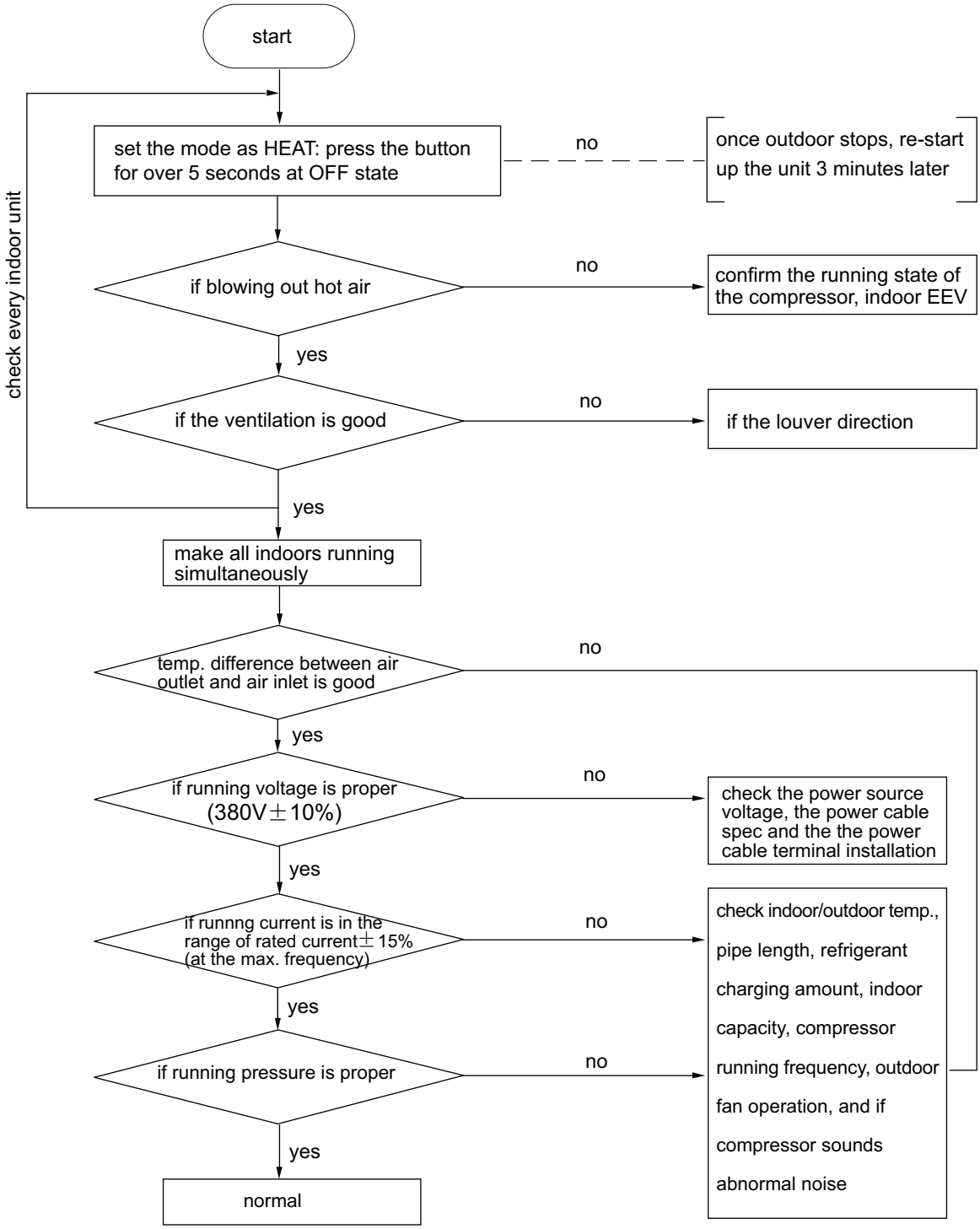

Note 1: Temp. difference between air inlet and air outlet Standard

A. In cooling mode, after running for at least 30 minutes, it is normal that the temp. difference between air inlet and air outlet is over 10℃, (at max. frequency)

B. In heating mode, after running for at least 30 minutes, it is normal that the temp. difference between air inlet and air outlet is over 18℃, (at max. frequency).

Note 2: Running current standard

It is normal that the running current is in the range of rated current ±15%(at max. frequency) . The current will be different for the below condition:

if more than the rated current: high indoor/outdoor temp. ; outdoor bad ventilation (cooling mode), indoor bad ventilation (heating mode).

if lower than rated current: low indoor/outdoor temp.; refrigerant leakage (lack of refrigerant).

Note 3: Running pressure standard

cooling (at max. frequency)	high pressure 1.6~2.0MPa	indoor 18~32℃ outdoor 25~35℃
	low pressure 0.35~0.55MPa	
heating (at max. frequency)	high pressure 1.5~2.1MPa	indoor 15~25℃ outdoor 5~10℃
	low pressure 0.3~0.45MPa	

The above value is measured after running for 15 minutes (ambient temp. is DB℃)

High/low pressure changing trend due to the running condition:

Cooling/heating:

indoor temp. goes up---high/low pressure goes up

indoor temp. goes down---high/low pressure goes down

outdoor temp. goes up---high/low pressure goes up

outdoor temp. goes down---high/low pressure goes down

4.2 Control function

1. Features and functions of central controller

1) Central controller can realize monitor and control for the MRV II system. Can be used for single MRV II system and also for multi MRV II systems; can control max. 64 groups and every group can connect max 16 sets of indoor.

2) Central controller control diagram is as below:

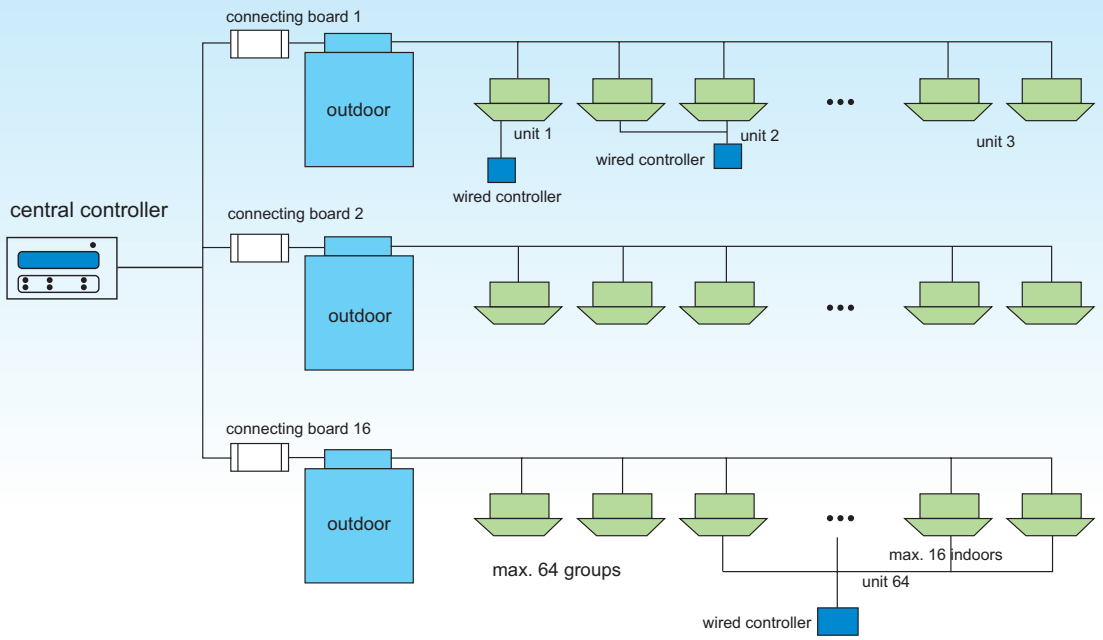

Figure 1 MRV II central control system diagram

● Main functions of central controller

(1) Can monitor the runnng mode, fan speed, set temp., swing and ventilation, etc of the max. 64 groups of indoor. And display indoor filter icon.

(2) Can realize the setting of mode, fan speed, temp. of single unit/group/total of indoors.

(3) Can realize the setting of indoor mode and ventilation.

(4) Can set the three modes: priority for entering later, central control and lock.

(5) Can monitor indoor failure and save it to be checked.

(6) Can connect the exterial signal input. When receiving the external signal such as the fire alarm to control simultaneously.

(7) Receive external timer signal to control TIMER ON/OFF for the unit.

(8) Can set the central control unit as a group, and the max. 64 units of indoor can be set a group. After setting unit, the indoor in one group can be controlled the same operation (when out of factory, one unit is regarded as one group).

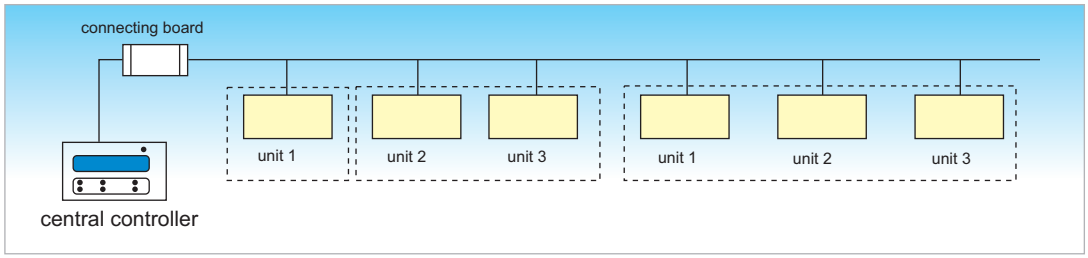

Figure 2 Central unit and group diagram

(9) When the central controller connects one outdoor unit, the connecting board IGU04 is unnecessary.

2. Display and button introduction of central controller

● LCD and buttons on central controller, shown as figure 3:

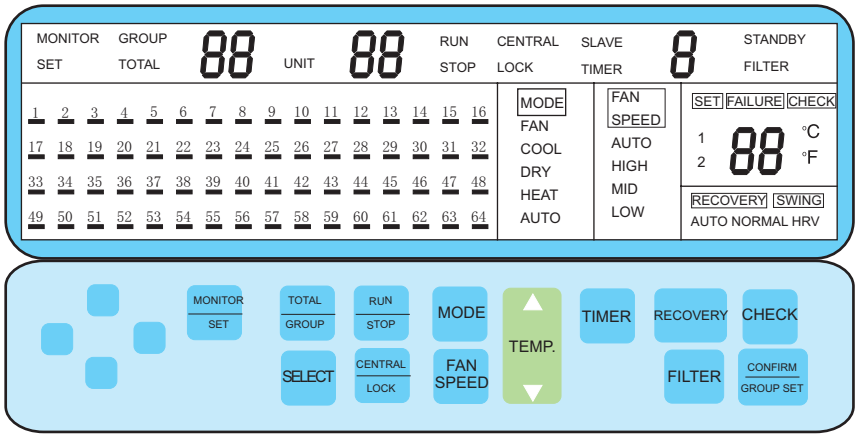

Figure 3: LCD and buttons on central controller

2.1 LCD icons introduction

LCD of central controller displays indoor state and setting mode of different units.

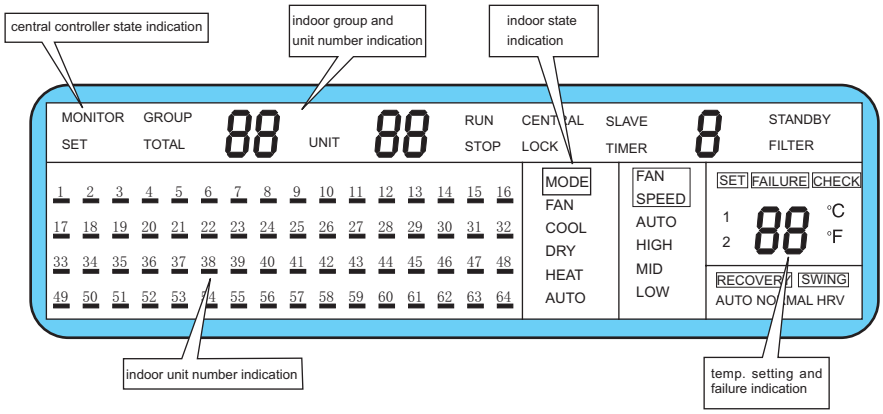

Figure 4: LCD diagram of central controller

a. The state indication icon shows the central controller in "MONITOR" or "LOCK" state.
b. Indoor group and unit number indication shows the current indoor group No. and unit No.
c. Indoor state indication shows the current indoor running state, mode, fan speed, set temp., ventilation and if needing filter cleaning.
d. Indoor unit No. indication shows all indoor unit No. connected to the bus wire. If the indoor does not run, it only displays unit No.; if the indoor is running, it will display the No. with underline.
e. Set temp. and failure indication will show the current set temperature and when the current indoor occurs failure, LCD will display FAILURE icon and the failure code.

● After the central controller is electrified, all icons on LCD will display for 3 seconds, as shown in Figure 4. Then if the controller is the master central controller, LCD will display "CENTRAL", and "88"on "GROUP" "UNIT" position will flash at 1Hz frequency, the sequence is 888→ 888→88→8, which shows the central controller is searching indoor, when indoor unit is found, LCD will display the indoor state and display "MONITOR" icon; if no indoor unit is found, the "88" will flash all the time at 1Hz; when more than 2 indoor units are found, it will display the min. unit No., and the unit No. indication will display all found indoor unit No. Indoor state indication and set temp. indication will display the running state and set temp. of the indoor with min. No.

● Set temp. indication and the corresponding indoor unit set temp. of the unit No. indication will display failure code, when failure occurs.

● The icons on the set area will not display after being electrified, only in setting state, or pressing "GROUP" button, it will display and only display the indoor running state of the selected area. If within 15 seconds, no input or press again "MONITOR/SET" button, "GROUP" icon will disappear automatically and resume to the original totally monitor state.

2.2 Button functions

The button distribution is shown in Figure 5.

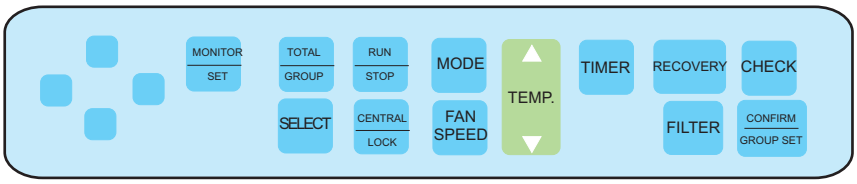

Figure 5: Button distribution diagram

(1) MONITOR/SET button

a. Used for the monitor state and the set mode changeover;
b. After being electrified (or pressing RESET button), the central controller will regard the monitor state as the default. LCD will display "MONITOR" icon, and "SET" will disappear;
c. In monitor state, the valid buttons are MONITOR/SET, UNIT, TOTAL, CHECK and FILTER;
d. In monitor state, press MONITOR/SET button, the central controller turns to the set state, "MONITOR" disappears, "SET" will be on and flash at 1Hz to enter SET state; then if within 15 seconds, press no buttons or press again SET, the controller will be back to MONITOR state;
e. In set state, all the buttons are valid.

(2) GROUP SET/CONFIRM button

a. In monitor state, press the button to select the indoor group; and in set state, confirm the group selection.

(3) TOTAL/GROUP button

a. Press GROUPSET/CONFIRM button to select the control range;

b. Press it every time, the display sequence on LCD is

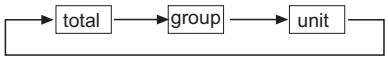

c. In monitor state, press it, and the LCD will display "GROUP" or "TOTAL".

(4) SELECT button

a. Used to put the indoor unit No. into the group or take the unit No. out of the group.

b. In monitor state, the button is invalid.

(5) Group button

a. Used to select the group No. to be displayed or to be set, and display on LCD; every time press it, the number will change from 1 to 64;

b. In monitor state, LCD will display the indoor running state in this group.

(6) Unit button

a. Used to select the unit No. to be displayed or to be set, and display on LCD; every time press it, the unit will change from 1 to the unit No. connected to the outdoor (max. No. is 64).

(7) RUN button

a. Used to start up the unit

b. In set state, press it, the "STOP" icon will disappear, "RUN" will be light (if the unit is ON before pressing the button, the unit is still ON after pressing it), and in the indoor unit number indication area, the corresponding indoor number will be light with underline; in set state, you can set RUN for different indoors.

c. In monitor state, press "TOTAL" button firstly, when icons "TOTAL", "RUN" and "STOP" are all light, press "RUN" button, icon "STOP" will be OFF, "RUN" stops flashing, and the controller will send startup signal to all indoors, "TOTAL" will flash at 1Hz for 3 seconds, then be OFF.

(8) STOP button

a. Used to stop the unit

b. In set state, press it, the "RUN" icon will disappear, "STOP" will be light (if the unit stops, after pressing it, the unit still stops), and the corresponding indoor number underline will be off; in set state, you can set STOP for different indoors.

c. In monitor state, press "TOTAL" button firstly, when icons "TOTAL", "RUN" and "STOP" are all light, press "RUN" button, icon "RUN" will be OFF, "STOP" stops flashing, and the controller will send stop signal to all indoors, "TOTAL" will flash at 1Hz for 3 seconds, then be OFF.

(9) CENTRAL/LOCK button

a. Used to select indoor central control mode;

b. Every time press it, indoor mode will be repeated as the sequence: priority for the entering latter ---central --- lock, and the LCD display sequence is no display --- central --- lock.

(10) TIMER button

a. Used to set the timing function;

b. In set state, press it, TIMER icon on LCD will be light, which shows the corresponding indoor unit in unit No. indication area has been set TIMER mode; press again, TIMER icon will be off, which shows TIMER has been cancelled.

(11) MODE button

a. Used to select indoor operation mode; every time press it, the mode will change in the sequence: FAN→COOL→DRY→AUTO

b. In monitor state, the button is invalid.

(12) FAN SPEED button

a. Used to select indoor fan speed;

b. every time press it, the mode will change in the sequence:

AUTO→HIGH→MID→LOW

b. In monitor state, the button is invalid.

(13) TEMP button

a. Used to set the set temperature; every time press it, the temp. will increase or decrease 1 degree; if you keep pressing it, the temp. will change quickly until the max. or the min. temp.

b. In monitor state, the button is invalid.

(14) FILTER button

a. Used to remove the filter icon;

b. When LCD displays FILTER, press the button, then FILTER icon will disappear.

(15) RECOVERY button

a. Used to set indoor RECOVERY function. Every time press it, the recovery icon will change as AUTO→NORMAL→HRV;

b. In monitor state, the button is invalid.

(16) CHECK button

a. Press it, the controller will enter the failure history to display the current indoor failure code and the latest occured failure code;

b. If pressing it when displaying the failure history, it will quit and be back to the monitor state;

c. Press the button for over 10 seconds, all the failure history will be cleared;

d. When no failure history, the set temp. area will display "--".

Note: CHECK 1 is the current failure; CHECK 2 is the latest failure.

(17) RESET button

Used to reset the controller; it is inside the controller.

3. Group setting and cancel

3.1 Group setting

1) The central controller can set multiple units as one group, and the indoor in one group can be controlled ON/OFF simultaneously.

2) In monitor state, press "CONFIRM/GROUP SET", LCD will display "SET", "GROUP", group No. "1" and unit No. in group "1".

3) Press group button to select the group No., "△" increases, "▽" decreases, the number will change among 1~64.

1→2→3→4 · · · · →63→64

4) Press unit button to select the unit to be set as one group, the corresponding unit on LCD will flash at 2Hz.
5) Press "SELECT" button to confirm the unit, the unit No. on LCD stops flashing and becomes ON.
6) Repeat procedure 4 and 5 to set the other units into the group.

After pressing "MONITOR/SET", the setting is finished, and the controller will turn into monitor state; or if no any pressing within 15 seconds, the controller will turn into monitor state automatically.
Note: One indoor unit can be set in multiple groups. For the indoor without connected, when selecting indoor unit, the No. will be ignored and not display on LCD.

3.2 Cancel group
1) In monitor state, press "CONFIRM/GROUP SET" to change to the set state, LCD displays "SET", "GROUP" icons.
2) Press group button "△" and "▽" to select the group to be cancelled, LCD will display group No. and the units in the group.
3) Press unit button "△" and "▽" to select the unit to be cancelled, LCD will display indoor No.
4) Press SELECT for about 3 seconds, the unit No. underline will disappear.
5) Repeat procedure 3 and 4 to cancelled the other unit No. in the group.
6) Press "CONFIRM/GROUP SET" and the indoor unit No. without underline disappears.

After pressing "MONITOR/SET", the setting is finished, and the controller will turn into monitor state; or if no any pressing within 15 seconds, the controller will turn into monitor state automatically.

4. Control mode setting

The central controller can set the following modes for the indoor unit connected to the bus wire: mode, fan speed, set temp., recovery, etc. and set the centrol control mode (priority for entering latter, central and lock). Also it can set the single/group/total mode for indoor unit.
4.1 Single indoor unit setting
1) Press "MONITOR/SET" button, the controller turns into set state, "SET" icon on the LCD will display at 1Hz.
2) Indoor unit number selection: press unit △ and ▽ to select the unit to be set.
3) Indoor operation mode selection: press "CENTRAL/LOCK" button to select indoor central control mode, every time press it, LCD will display:

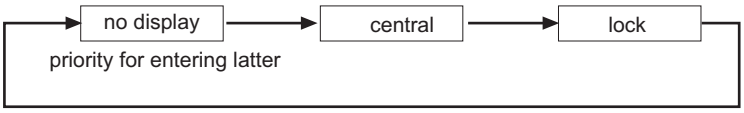

Priority for entering latter: the set demand input latter is valid between central controller and indoor individual controller.
Central: in central mode, indoor unit only can receive the ON/OFF demand from the individual controller.
Lock: indoor unit does not recieve any demand from individual controller.

4) Set: press MODE, FAN SPEED, TEMP., RECOVERY button to set indoor operation state, the detailed info refers to 2.2.
5) RUN/STOP set: in OFF state, press "RUN/STOP" button, LCD displays "RUN"; in ON state, press "RUN/STOP" button, LCD displays "STOP".
6) Press "CONFIRM/GROUP SET" to confirm the set.

After pressing "MONITOR/SET", the setting is finished, and the controller will turn into monitor state; or if no any pressing within 15 seconds, the controller will turn into monitor state automatically.

If you only set ON/OFF for indoor unit, the procedure 3 and 4 are not necessary. The system regards the mode, fan speed, set temp. as the same before being switched off; if being electrified after being powered off, the default modes are: MODE: AUTO; FAN SPEED: AUTO; set temp.: 24degree.

4.2 Total indoor units in group setting

Central controller can operate the indoor in group. The procedure is as follows:
1) Press "MONITOR/SET" button, the controller turns into set state, and SET will flash on LCD at 1Hz.
2) Total/group/unit selection: press "TOTAL/GROUP", then "GROUP" will display on LCD. Every time press it, the changing sequence is:

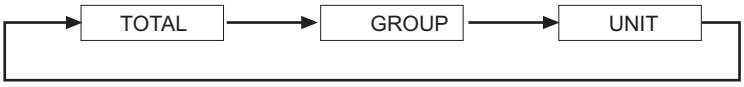

3) Set group No.: Press group and to select the group No. LCD will display the min. indoor unit No. on the mode and fan speed area.
4) Indoor operation mode selection: press "CENTRAL/LOCK" button to select the indoor central control mode. Every time press it, the following will display on LCD:

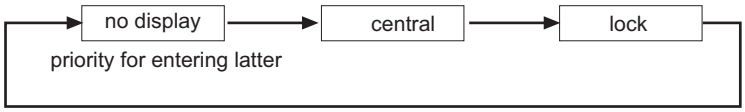

5) Setting: press MODE, FAN SPEED, TEMP., RECOVERY, etc to set indoor operation mode.
6)RUN/STOP set: in OFF state, press "RUN/STOP" button, LCD displays "RUN"; in ON state, press "RUN/STOP" button, LCD displays "STOP".
7) Press "CONFIRM/GROUP SET" to confirm the set.

After pressing "MONITOR/SET", the setting is finished, and the controller will turn into monitor state; or if no any pressing within 15 seconds, the controller will turn into monitor state automatically.

If you only set ON/OFF for indoor unit, the procedure 3 and 4 are not necessary. The system regards the mode, fan speed, set temp. as the same before being switched off; if being electrified after being powered off, the default modes are: MODE: AUTO; FAN SPEED: AUTO; set temp.: 24degree.

4.3 Setting for indoor in a single unit of a group

The procedure is as follows:

1) Press "MONITOR/SET" button, the controller turns into set state, and SET will flash on LCD at 1Hz.

2) Total/group/unit selection: press "TOTAL/GROUP", then "GROUP" will display on LCD. Every time press it, the changing sequence is:

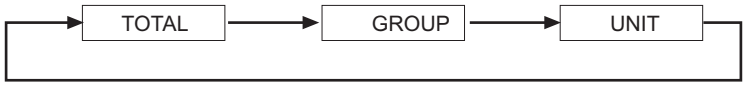

3) Set group No.: Press group and to select the group No. LCD will display the min. indoor unit No. on the mode and fan speed area.

4) Set unit No.: press unit and to select the indoor unit No. to be set, the indoor number to be set will flash on LCD.

5) Indoor operation mode selection: press "CENTRAL/LOCK" button to select the indoor central control mode. Every time press it, the following will display on LCD:

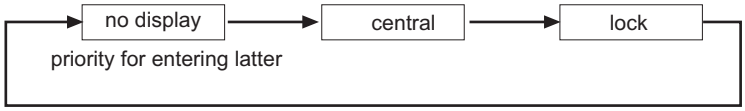

6) Setting: press MODE, FAN SPEED, TEMP., RECOVERY, etc to set indoor operation mode.

7)RUN/STOP set: in OFF state, press "RUN/STOP" button, LCD displays "RUN"; in ON state, press "RUN/STOP" button, LCD displays "STOP".

8) Press "CONFIRM/GROUP SET" to confirm the set.

After pressing "MONITOR/SET", the setting is finished, and the controller will turn into monitor state; or if no any pressing within 15 seconds, the controller will turn into monitor state automatically.

If you only set ON/OFF for indoor unit, the procedure 3 and 4 are not necessary. The system regards the mode, fan speed, set temp. as the same before being switched off; if being electrified after being powered off, the default modes are: MODE: AUTO; FAN SPEED: AUTO; set temp.: 24degree.

4.4 Total indoor setting

The procedure is as follows:

1) Press "MONITOR/SET" button, the controller turns into set state, and SET will flash on LCD at 1Hz.

2) Total/group/unit selection: press "TOTAL/GROUP", then "GROUP" will display on LCD. Every time press it, the changing sequence is:

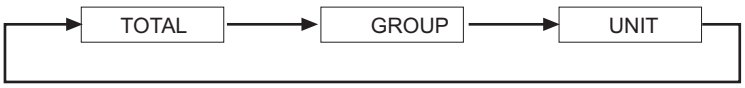

3) Indoor operation mode selection: press "CENTRAL/LOCK" button to select the indoor central control mode. Every time press it, the following will display on LCD:

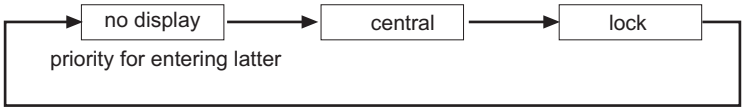

4) Setting: press MODE, FAN SPEED, TEMP., RECOVERY, etc to set indoor operation mode.
5)RUN/STOP set: in OFF state, press "RUN/STOP" button, LCD displays "RUN"; in ON state, press "RUN/STOP" button, LCD displays "STOP".
6) Press "CONFIRM/GROUP SET" to confirm the set.

After pressing "MONITOR/SET", the setting is finished, and the controller will turn into monitor state; or if no any pressing within 15 seconds, the controller will turn into monitor state automatically.

If you only set ON/OFF for indoor unit, the procedure 3 and 4 are not necessary. The system regards the mode, fan speed, set temp. as the same before being switched off; if being electrified after being powered off, the default modes are: MODE: AUTO; FAN SPEED: AUTO; set temp.: 24degree.

5.Total ON/Total OFF operation

Central controller can operate ON/OFF simultaneously for the indoors connected to the bus wire. The indoors will operate as the default modes, and need not set the indoor mode, fan speed, etc.

5.1 Total indoors ON/OFF setting

1) Check if the central controller is in monitor state. If it is in set monitor, press "MONITOR/SET" to ensure that LCD displays MONITOR icon.
2) Total/group/unit selection: press "TOTAL/GROUP", LCD will display "TOTAL" icon, meanwhile, SET icon flashes.
3) RUN/STOP set: in OFF state, press "RUN/STOP" button, LCD displays "RUN"; in ON state, press "RUN/STOP" button, LCD displays "STOP".
4) Press "CONFIRM/GROUP SET" to confirm the set.

5.2 ON/OFF setting for total indoors in one group

1) Check if the central controller is in monitor state. If it is in set monitor, press "MONITOR/SET" to ensure that LCD displays MONITOR icon.
2) Total/group/unit selection: press "TOTAL/GROUP", LCD will display "TOTAL" icon, meanwhile, SET icon flashes.
3) Select group No.: press group ⊘ and ⊘ to select the group to be set.
4) RUN/STOP set: in OFF state, press "RUN/STOP" button, LCD displays "RUN"; in ON state, press "RUN/STOP" button, LCD displays "STOP".
5) Press "CONFIRM/GROUP SET" to confirm the set.

If you want to set the indoors of the other groups the same operation, repeat procedure 3 and 4.

6. Filter indication

6.1 Filter icon and reset operation

On central controller, filter icon shows the filter state of corresponding indoor unit. When the filter needs to be cleaned, the icon will occur.
1) Check if central controller is in monitor state, if not, press "MONITOR/SET" to turn into monitor state.
2) Select the unit No.: press unit ⊘ and ⊘ to check indoor state.
3)Check FILTER icon: if FILTER icon of the current indoor is light, it shows this indoor filter needs to be cleaned.
4) Clean the indoor filter.
5) After cleaning, press FILTER button to reset, and FILTER icon on LCD will be off.

7. Failure diagnosis function

When indoor failure occurs, the central controller will display the corresponding failure code. When checking failure, if the faulty indoor unit is the current displayed one, the controller will display the corresponding failure code; if the faulty indoor unit is not the current displayed one, the faulty unit No. will flash. When checking the indoor, the failure code will display on LCD.

Press CHECK button for 0.5 seconds to find the failure history. The failure code refers to the maintenance section.

8. Safety cautions for central controller

1) Must avoid water splash on the central controller or the controller is installed on the higher position, otherwise, the controller will be damaged.

2) Must avoid being installed in the place with much dirt, or it will cause the controller in short circuit or electric shock, which will damage the controller.

3) Avoid the sunshine shrows onto the controller directly, also do not be close to the flammable or the explosive objects.

4) The central controller must be away from the TV and radio. Keep a distance more than 1m. Or the controller will occur wrong operation.

5) Don't press the button with wet hand, or the controller will be damaged.

6) Central controller must be installed or maintained by the authorized distributor or installer.

7) When in maintenance, please cut off the power.

9. Exterior dimensions for central controller

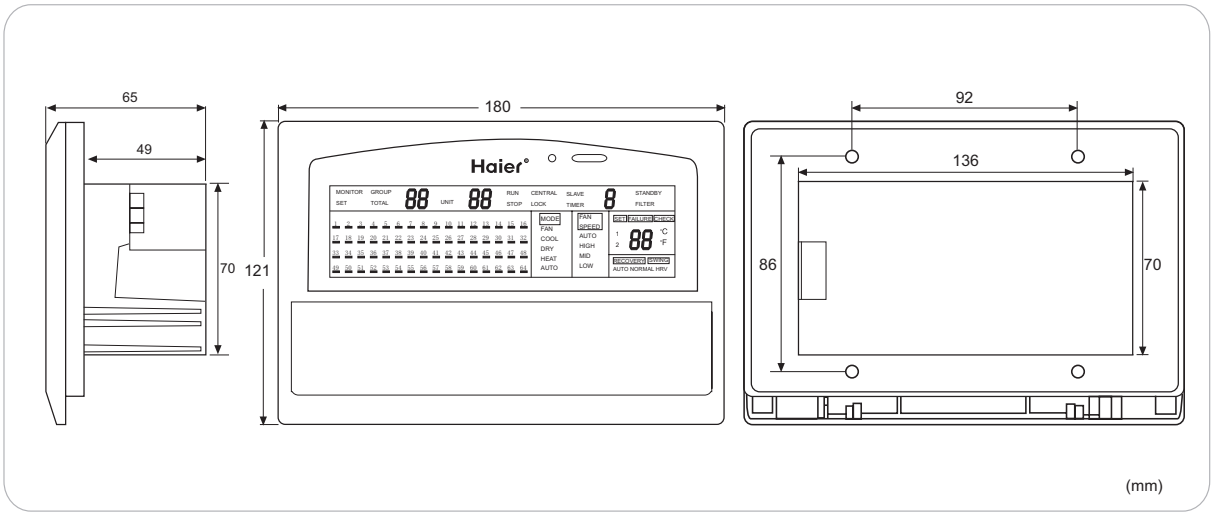

Figure 6: Exterior dimension

10. Installation instruction of central controller

10.1 Wiring diagram is as follows:

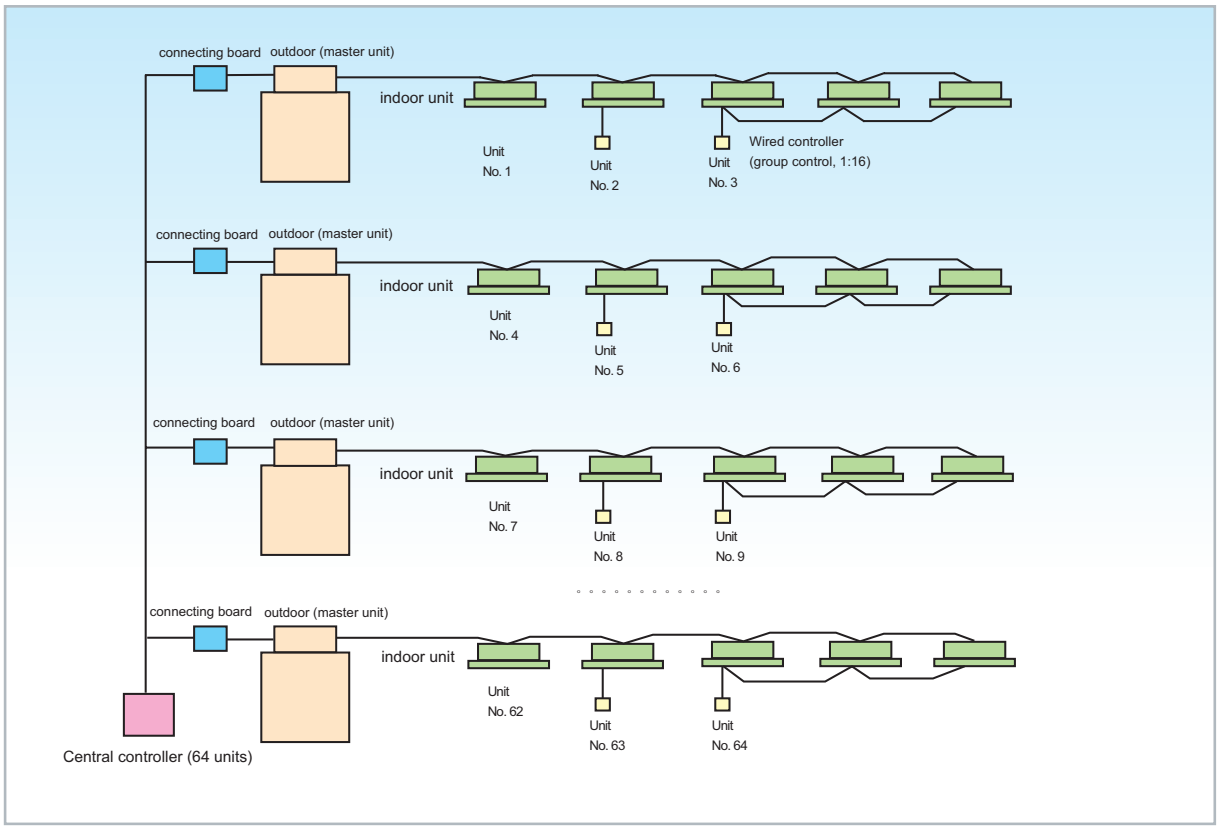

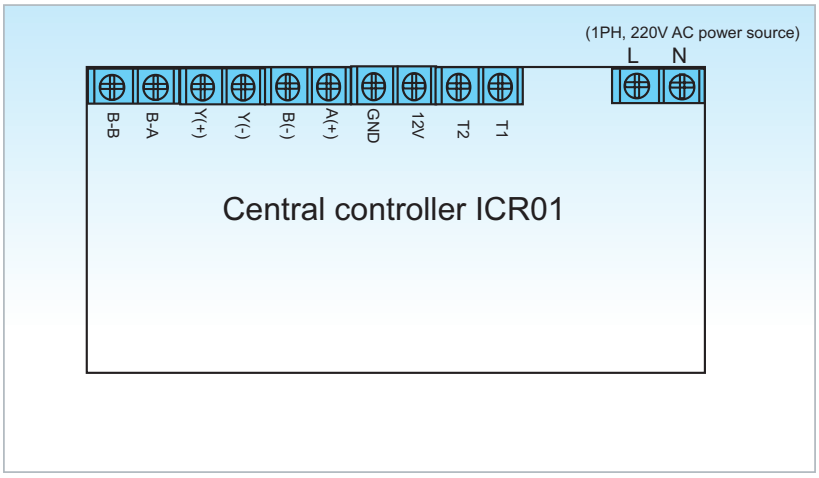

back of central controller

Figure 7: Central controller (1:64) wiring diagram --- bus line type

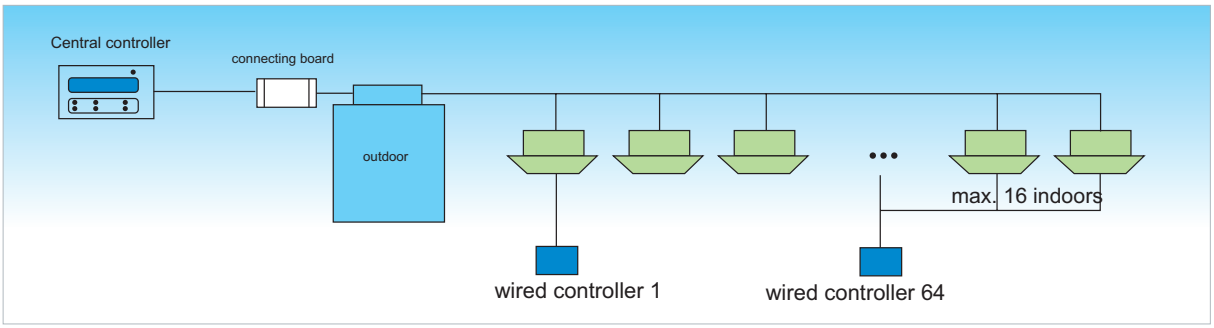

Figure 8: Central controller (1:64) wiring diagram --- daisy chain type

10.2 Communication wire specs

The wire between connecting board to the central controller is the dual-core STP (shielded twisted pair). The detailed specs are as below:

wire length(m)	Specs
⩽100	0.3mm^2 * 2-core STP
⩾100 and ⩽200	0.5mm^2 * 2-core STP
⩾200 and ⩽300	0.75mm^2 * 2-core STP
⩾300 and ⩽400	1.25mm^2 * 2-core STP
⩾400 and ⩽600	2mm^2 * 2-core STP

※ Shielded layer of communication wire must be earthed on one end.

11. Connecting board wiring method

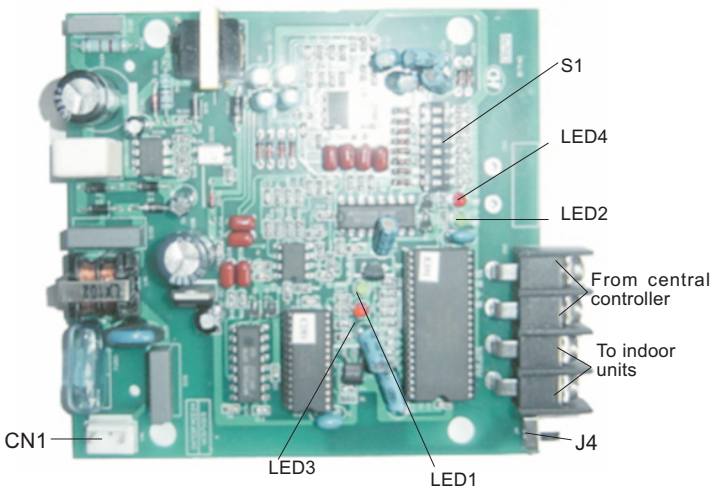

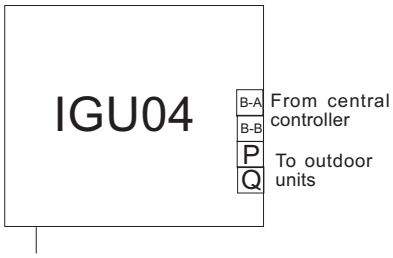

1. Dip switch setting of central controller: shown in the below figure (ON:0, OFF: 1)

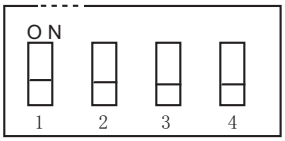

Dip switch setting meaning:

The first bit: central bux line selection, 0: indoor bus line; 1: central bus line

The second bit: master/slave central controller selection, 0: master central controller; 1: slave central controller

The third, fourth bit: control range, 00: 1~64, 01: 65~128, 10: 129~192, 11: 193~256. Every central controller only can control 64 units, and every unit can include max. 16 indoors, but the central controller only displays the master indoor state.

position	1	2	3	4
0: ON	indoor bus line	master controller	00: 1~64 01: 65~128	
1: OFF	central bus line	slave controller	10: 129~192 11: 193~256	

For example:

Select central bus line, master central controller, control range is 00, so the dip switch is 1 0 0 0.

Select indoor bus line, master central controller, control range is 00, so the dip switch is 0 0 0 0.

2. Dip switch setting of connecting board

The dip switch is as below figure (ON:1, OFF: 0):

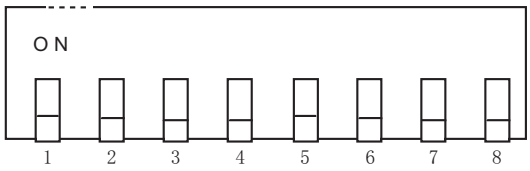

position								description
[1]	[2]	[3]	[4]	[5]	[6]	[7]	[8]	
—	—	0	0	0	0	0	0	connecting board address =1
—	—	0	0	0	0	0	1	connecting board address =2
----			----					
—	—	0	1	1	1	1	0	connecting board address =63
—	—	0	1	1	1	1	1	connecting board address =64
—	0							central bus line: 3600baud
—	1							central bus line: 2400baud
0								auto set address
1								manual set address

12. Cautions for central controller

12.1 Application range:

Central controller (1:64) can be used for MRV II. It can control the indoors in single refrigerant system, also can control the indoors in multi refrigerant system (connecting board for the master outdoor unit is necessary). Every central controller can control 64 units of indoors, and every unit can connect max. 16 indoors. But the indoors connected to single refrigerant system can not exceed 40 sets.

Note:

1) Single refrigerant system: composed of one outdoor master unit, outdoor slave units, and indoor units.

2) Wired controller can control 1~16 sets of indoors, and there are 6 types of connection. When being controlled by the wired controller or central controller, all indoors in one unit will be set at the same state.

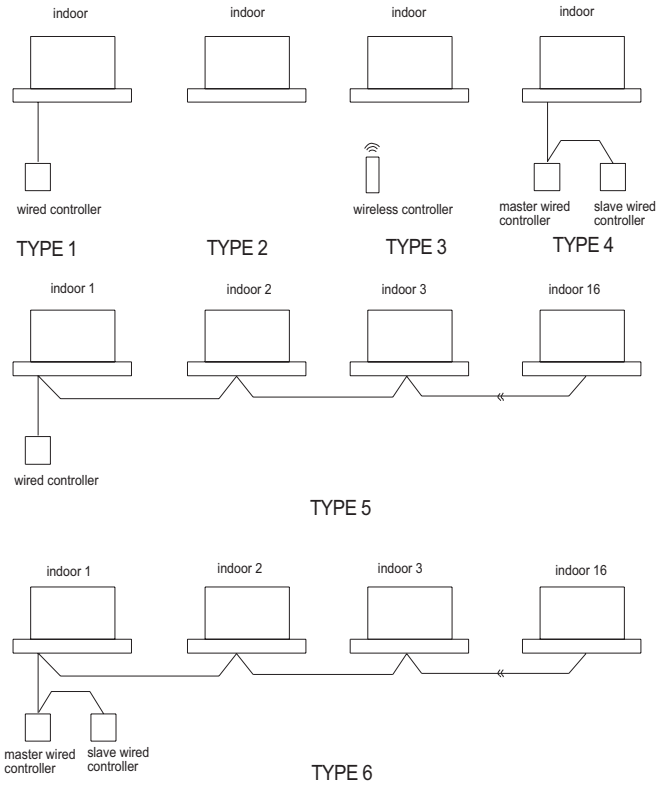

12.2 Communication wire and power cable connection

Every inverter master unit must connect a connecting board to transform the protocol.

1) CN01 on connecting board (port of indoor communication bus line) connects to P, Q on terminal block.

2) CN02 on connecting board (port of central control communication bus line) connects to X, Y on terminal block.

3) CN03 on connecting board (port of AC220V power source) connects to A, B on terminal block.

Communication wire and central controller power cable specs:

item	specs
communication wire	2-core shielded wire, 0.75mm2
power cable	2-core RVV wire, 0.5mm2

Communication wire and power cable connection:

1) After connecting the connecting board and outdoor master unit. Connect the communication terminal X, Y among master units, and between master unit and central controller. Non-polarity. The communication wires adopts the daisy chain type wiring (shortly, one unit by one unit), The total length can be up to 500m.

2) Power cable wiring: Connect AC 220V power source nearby.

12.3 Relative setting when being central controlled

1) Indoor central control address setting method:

Central control address dip switch: SW02 (8-bit), the setting is below: (only the master indoor in a unit needs to be set the address)

SW02								description
[1]	[2]	[3]	[4]	[5]	[6]	[7]	[8]	
__	0	0	0	0	0	0	0	central control address=1
__	0	0	0	0	0	0	1	central control address=2
----								----
__	1	1	1	1	1	1	0	central control address=127
__	1	1	1	1	1	1	1	central control address=128
0								set central control address by wired controller
1								Forbidden to set address by wired controller

When the first bit of SW02 is ON, indoor central control address will be set by wired controller, and the address will be saved in EEPROM of wired controller (it won't miss even though indoor and wired controller are electrified again). So the first bit of SW02 must be OFF.

2) When the wired control type unit does not connect the wired controller, the central control setting method is as follows:

In this case, you must set the PCB as remote wireless control type, and cancel the communication with wired controller, the detailed method is as follows:

Set the jumper J19 on indoor PCB:

J19	function
connected	wired control
disconnected	remote control

CN30 on indoor PCB:

CN30	function
connected	wired control
disconnected	remote control

Note: if making central control for more than one indoor, please must connect the wired controller.

12.4 Setting method in group control

1) Address setting method for indoor in one group

When making group control with wired controller, the indoor unit connected to the wired controller is the master unit. Use the rotary switch SW01 to set the indoor unit address, for master unit, SW01 is at 0, while the rotary switch SW01 of the slave unit will be at the other digits except 0, and can not repeat.

2) Wiring method of serial communication wires between wired controller and indoors

Connect A, B, C on the wiring block of the serial communication wire between wired controller and indoor master unit; Only connect B, C on the wiring block of the serial communication wire between indoor slave unit and indoor master unit, and among indoor slave units.

3) Pull out the jumper of CN23 on the indoor slave unit PCB.

4.3 Management system H-CACS

1. General information

This management system suits for MRV II series air conditioner.

1.1 Gateway(Model:iGU01)

Function:Communication BUS for indoor &Outdoor ,adopt the running status parameters,transmit the control signal .And convert the comminucaition protocal from Homebus to LONKWORKS .Each system need one set ,that is the gateway quantity equals to Inverter outdoor unit quantity and every gateway can connect max. 40 sets of indoor in one system.

1.2 Network server(Model:iSERVER)

Function:Convert the communication protocol from Lonwokrs to TCP/IP.

Each Network server can connect 256 management ports(Each indoor unit ,outdoor unit is regarded as one management port) in theory ,But in fact ,the system can not be more than 200 management ports, and each management system can connect 4 sets network server maximum by HUB.

1.3 Network side software:Each software can control 20000 sets parameter ports

1.4 PC, HBU, internet wire, electric box, pulse ammeter are common devices, which will not be supplied by Haier and be purchased by the distributor or the buyer.

Herein,

PC is the engineer computer or the server with the current standard configuration.

HUB is required with the enough ports.

Pulse ammeter is required with high precision.

For example:

10 sets of indoor (20HP), 20 sets of indoor (30HP), 30 sets of indoor (40HP), MRV II outdoor. To realize monitor, control and count function.

The required devices are as follows:

3 gateways; 3 pieces of communication wire, one internet server, one set of network side software, internet wire, one set of PC.

2. Installation instruction

2.1 Structure figure

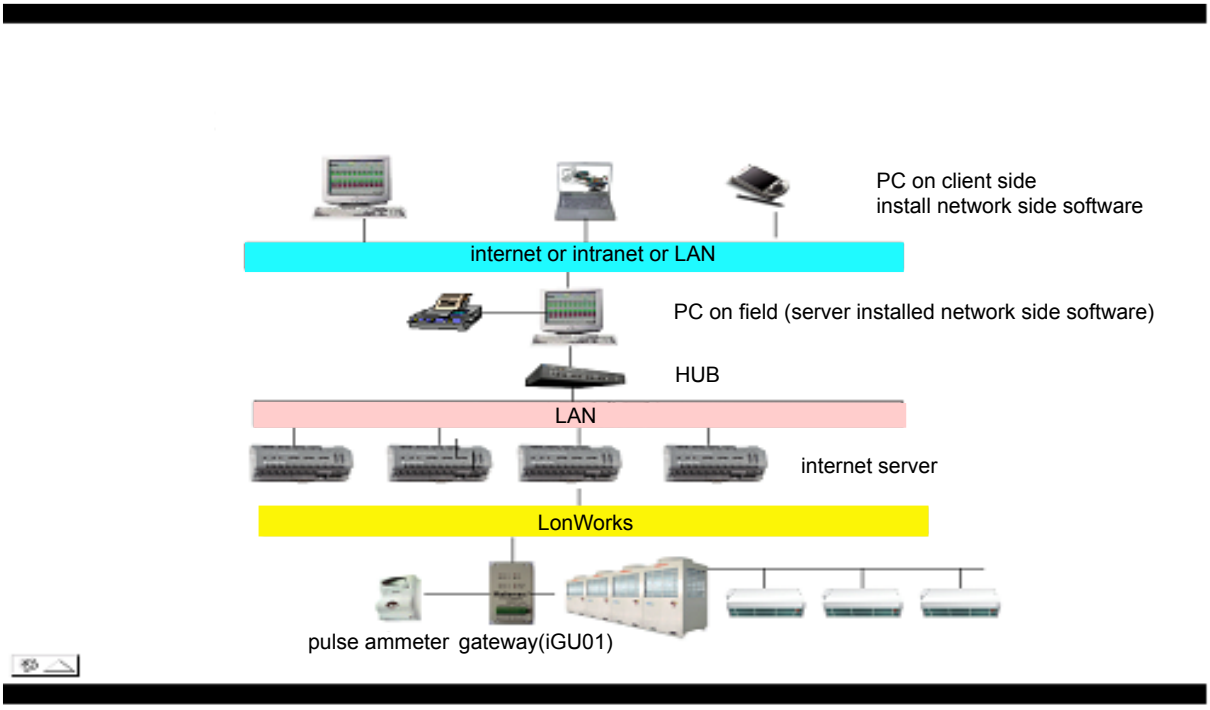

2. 2 System diagram:

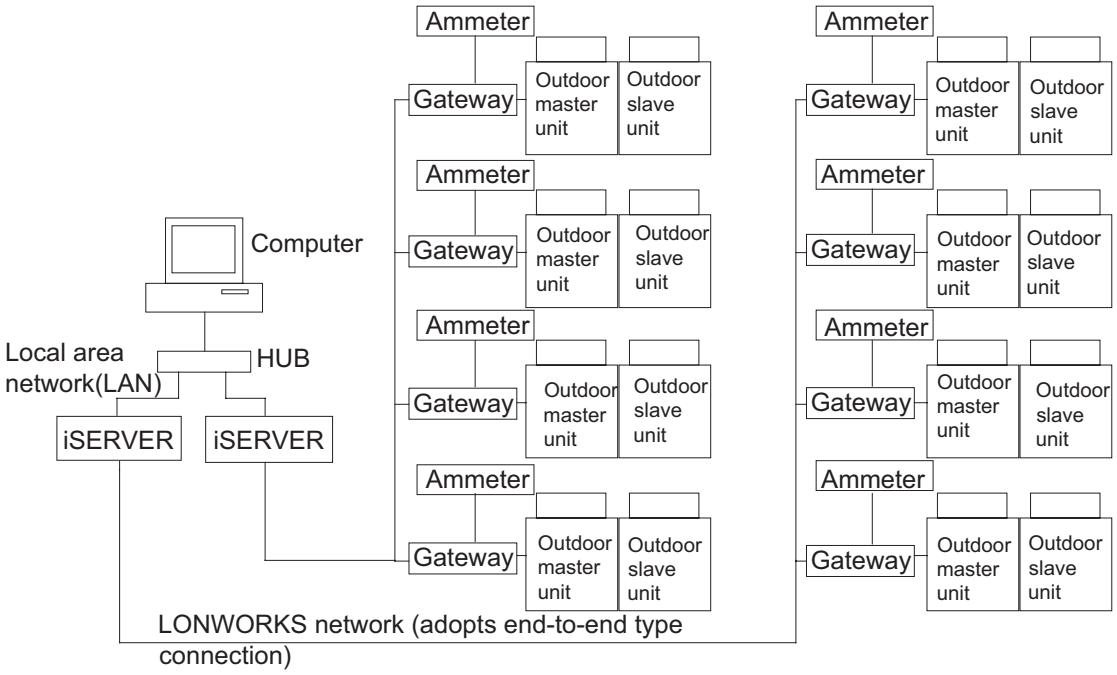

2. 3 Gateway exterior appearance & installation method

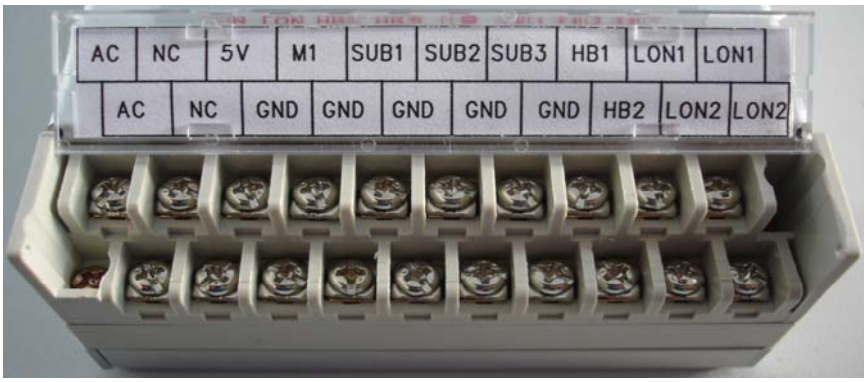

No.	item	Remarks
1	AC	13.8V, non-polar
2	AC	
3	NC	
4	NC	
5	5V	When ammeter connects external power supply, there should be a resistor 10KΩ between 5 and 7
6	GND	
7	M1	
8	GND	
9	SUB1	Signal of slave unit 1
10	GND	
11	SUB2	Signal of slave unit 2
12	GND	
13	SUB3	Signal of slave unit 3
14	GND	
15	HB1	Communication bus line between indoor and outdoor
16	HB2	
17	LONA	Communication bus line of LonWorks
18	LONB	
19	LONA	
20	LONB	

B.Installation place of gateway

Install the gateway near the master unit, because the gateway gets HOMEBUS data and slave data from outdoor inverter master unit(KMR-280W/BP), you could install the unit as follows:

Install the gateway on the cover of the electrical box right side of Master unit, drilling a hole on the site. Adopt the flat head tapping screw to fix the gateway, to prevent the wires punctured by the wires in the electric box.

C. Wiring connection of gateway:

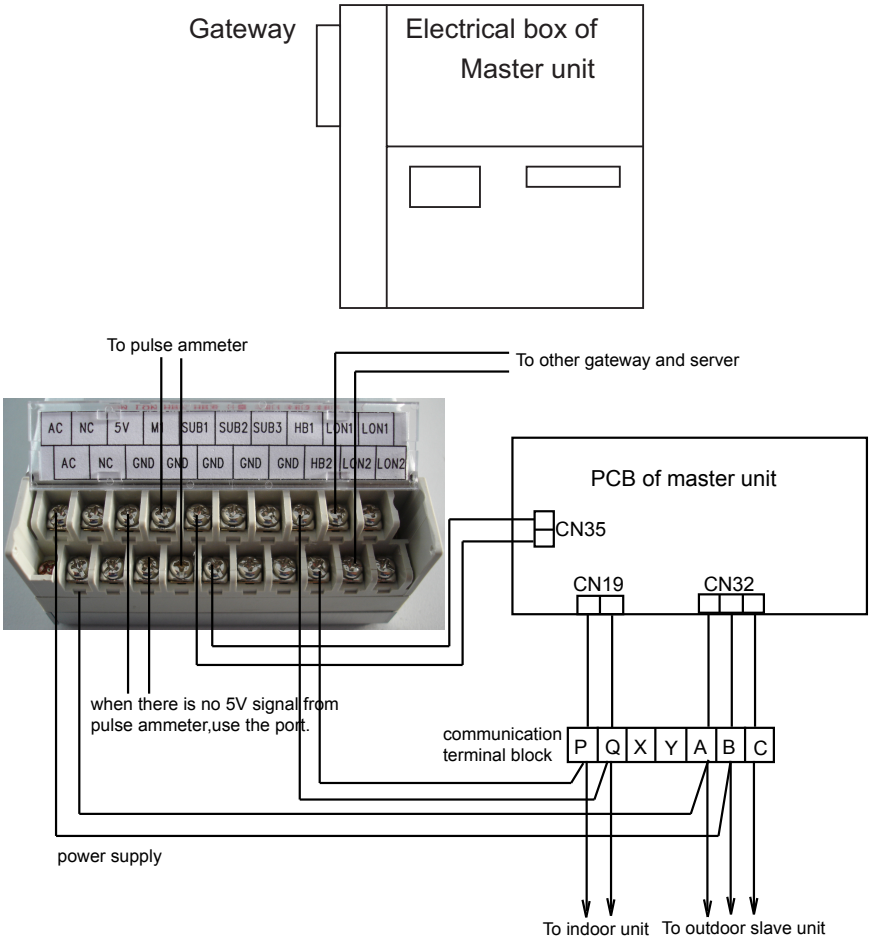

Remarks:

1) Power: The power of gateway is AC12V and could be getted from port A and B on the communication terminal block of outdoor master unit and slave unit. There cann be any error when connecting, or the gateway will be burnt off.
2) LON/LON(LONWORKS communication) connector: connect with the gateway of other master unit and LONWORKS communication connector of internet server, no polarity requirement.
3) HBS/earth wire(serial signal of master unit) wiring: connect with the output port of serial signal of the master uint PCB, get the parameter of slave unit from serial signal, could not detect slave unit data when in reverse connection. Polarity is required. When using communication wire 0010450044, black wire is connected to the HBS terminal of gateway, and white wire is connected to the earth wire on the right of HBS.

4) Count/ earth wire(pulse signal) wiring: connect pulse ammeter to get the power consumption recorded in the ammeter. Polarity is required.
Connect the earth wire terminal of pulse output of ammeter to the earth wire terminal on the right of count terminal of gateway, and the other terminal of pulse output of ammeter connects to the count terminal of gateway.
HBM/HBM (HOMEBUS communication) port: connect ports P&Q of the communication terminal block of outdoor master unit and indoor unit, no polarity requirement..

Spec of cable:

1) Power: Two-core RVV, the section area is 0.5mm^2, there is no polarity requirement when connection.

2) LON(LONWORKS communication) port: Two-core STP, the section area is 1.5mm^2, there is no polarity requirement when connection.

3) HBS(master unit serial signal): get state signal of slave units.

4) Count (pulse signal): use two-core RVVP shielded wire, the section area is1.0mm^2, there is polarity requirement when connection.

5) HBM (HOMEBUS communication): use two-core RVVP shielded wire, the section area is1.0mm^2, there is no polarity requirement when connection.

2.4 Connection among gateways, between gateway and server

The gateways are interconnected with two-core STP (the section is 1.5mm2) to make LONWORKS control network. The spec of signal wire is as above. The wiring of signal wires adopts bus type (identical with the communication wires connection between indoor and outdoor).

If it is very far from gateway to server, the wires must be shielded and be heat insulated well; and the shielded layer must be connected to the earth wire terminal of the server.

2.5 Exterior appearance & installation method of internet server

A. External appearance and definition of port

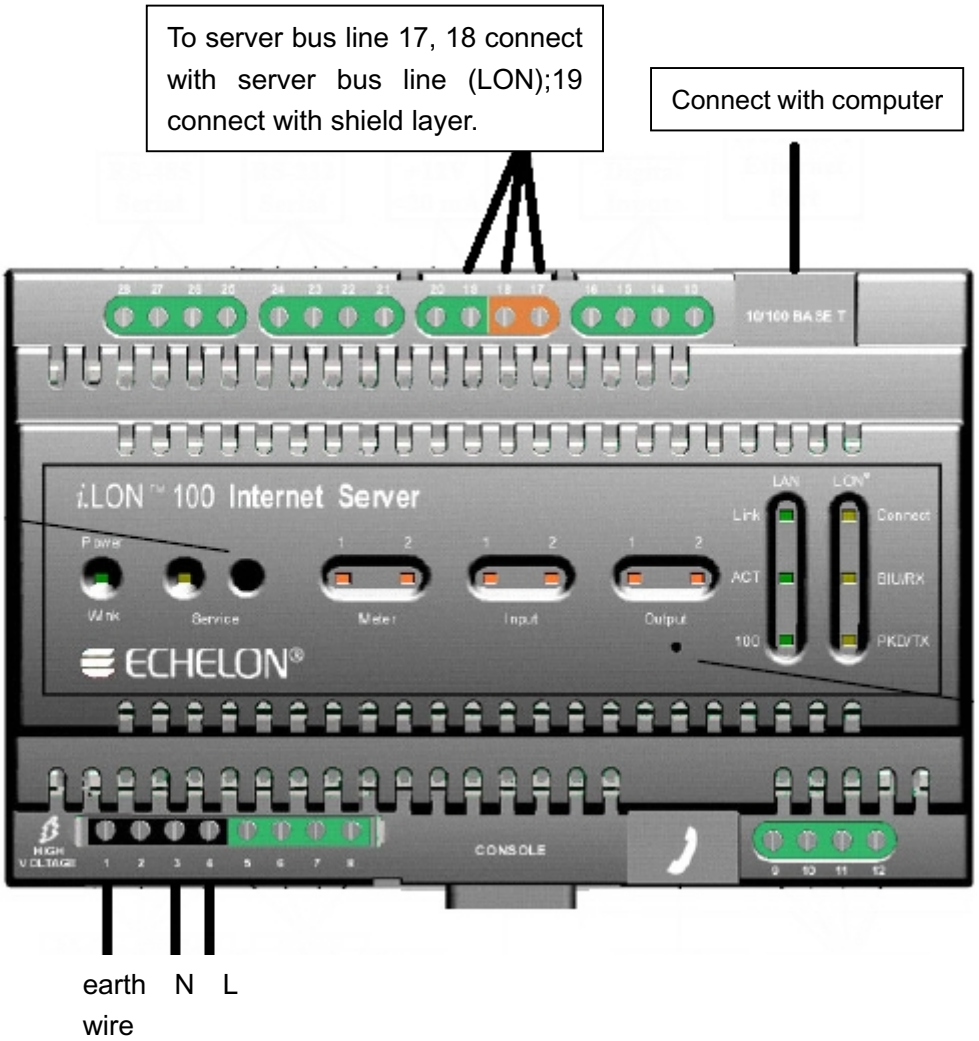

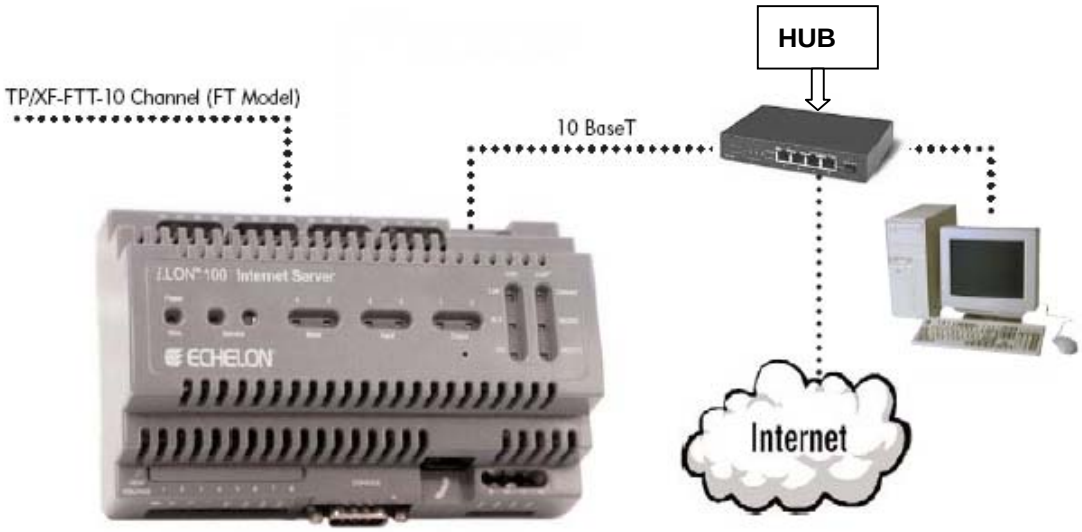

The other communication ports are no used.

A: External dimension and installation space requirement:

Because the internet server is a precise electronic device, it should be installed in the control room to connect computers conveniently.

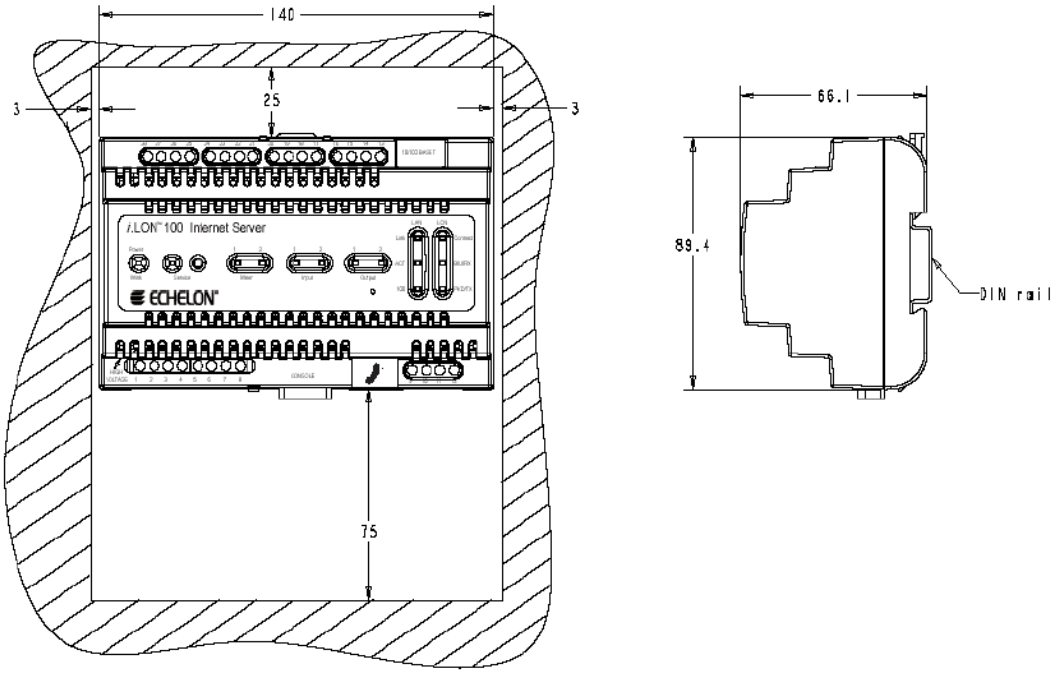

B. connection method:

1) Power: The internet server adopts AC220 power, connect the power wiring terminals on the server due to the corresponding marks. (1: earth wire; 3: connect with N; 4: connect with L).
   LON A/LON B (LONWORKS communication) port: communicate the LONWORKS after connecting all the gateways.
   (17: connect with shielded layer; 18: connect with LON; 19: connect with LON)
2) LAN port: connect to Ethernet network card, when there are many internet servers in the systm, you should connect to the HUB firstly and then to computer.

Spec of cable:

1) Power: use three-core RVV, the section area is 0.5mm^2.
2) LON (LONWORKS communication) port: Two-core STP, the section area is 1.5mm^2, there is no polarity requirement when connection.

LAN: Ethernet internet wire, 10 Base/T cable, Cat5 wire.

3. Cautions in installation

3.1 Set the communication address between indoor and outdoor unit and central address of indoor unit by hand, and set the same address for them. Make a table to record the room of indoor unit, the address of indoor unit, and the corresponding outdoor unit.
As the below table:

Name of room	Floor of room	Outdoor unit system	Indoor unit No.
Signal distribution office	--	S1-36N	1
West of training room	--	S1-90E	2
East of training room	--	S1-90E	3
Maintenance&technic team	--	S1-90E	4
Shift workshop section	--	S1-45N	5
Checking team	--	S1-90E	6
Periodic Maintenance team	--	S1-90E	7
Clearing team	--	S1-90E	8
Shift team	--	S1-90E	9
Debugging workshop	--	S1-90E	10
Running room	--	S1-90E	11

3.2 If you need the count function, the PC should be engineering computer or server to ensure the computer can run for a long time, also, please do not used the integrated internet card.

3.3 When the count function is available, all the outdoor power supply must pass the ammeter. 10HP and 20HP system, the slave outdoor can connect power from the terminal block of master outdoor unit; 30HP, and 40HP system, it is necessary to add a large capacity terminal block (no less than 100A).

3.4 Indoor power consumption is comparatively lower and will be counted respectively. Indoor unit can use the same power supply with the other indoor side electric application. The power consumption will be counted by the ammeter on the power supply circuit and not pass the H-CACS system.

Note: No matter if indoor units are running, make all indoors being electrified.

3.3 To get the steady signal, the internet wire and the power cable will be laid respectively. And the distance between them can not be less than 20cm. If they are through the shielded pipe, the distance can not be less than 10cm.

3.4 Indoor/outdoor communication wires and power cable must be laid respectively. And the distance between them can not be less than 20cm. If they are through the shielded pipe, the distance can not be less than 10cm.

3.5 Wired controller communication wires and power cable must be laid respectively. And the distance between them can not be less than 20cm. If they are through the shielded pipe, the distance can not be less than 10cm.

3.6 When wiring, ensure all the communication wire and power cable are laid respectively, and be earthed on one end of communication wire, also P, Q terminals can not touch the electric box.

The wiring among outdoors must be end by end and all the shielded layers of communication wire must be together, then connect the shielded layer to the earthed terminal of the server.

3.7 Pulse ammeter is the engineering device and should be purchased in advance. If the ammeters are installed centrally, the distance between ammeter and gateway should not be over 180m, and pulse output wire and power cable should be laid respectively, the distance between them can not be over 20cm. If the ammeter is installed in the master unit, recommend to use the electronic type.

3.8 All ammeters need to be measured and calibrated before being installed.

4. About the ammeter

If you want to realize the individual counting function, every gateway should be equipped with a 3-phase, 4-line ammeter. The ammeter will not be supplied by Haier, and be purchased locally. The request is as follow:

A. The ammeter can be used for 50Hz 3-phase AC electricity. The characteristic should comply with the regulation of the national criteria GB/T15283-94 or GB/T15282-94 and JB/T7655-95.

B. The amplitude of the pulse signal is DC 5V, the min. breadth of every pulse is 80ms.

C. The pulse signal of the ammeter is either passive or active one.

The present ammeter comprises mechanical type and electronic type, and the latter is requested. The parameters such as the rated current depends on the total consumption power after being combined.

5. Dip switch setting

"1" shows dip switch is ON or jumper is short connected; "0" shows dip switch is OFF or jumper is disconnected.

1. Indoor dip switch setting

A. Indoor address setting when in group control by wired controller: SW01.

SW01								Description
[1]	[2]	[3]	[4]	[5]	[6]	[7]	[8]	
0	0	0	0	--	--	--	--	wired controller address=1
0	0	0	1	--	--	--	--	wired controller address=2
--	--	--	--	--	--	--	--	--
1	1	0	1	--	--	--	--	wired controller address=15
1	1	1	1	--	--	--	--	wired controller address=16
--	--	--	--	0	0	0	0	indoor horse power=0.6HP
--	--	--	--	0	0	0	1	indoor horse power=0.8HP
--	--	--	--	0	0	1	0	indoor horse power=1.0HP
--	--	--	--	0	0	1	1	indoor horse power=1.25HP
--	--	--	--	0	1	0	0	indoor horse power=1.5HP
--	--	--	--	0	1	0	1	indoor horse power=1.7HP
--	--	--	--	0	1	1	0	indoor horse power=2.0HP
--	--	--	--	0	1	1	1	indoor horse power=2.5HP
--	--	--	--	1	0	0	0	indoor horse power=3.0HP
--	--	--	--	1	0	0	1	indoor horse power=3.2HP
--	--	--	--	1	0	1	0	indoor horse power=4.0HP
--	--	--	--	1	0	1	1	indoor horse power=5.0HP
--	--	--	--	1	1	0	0	indoor horse power=6.0HP
--	--	--	--	1	1	0	1	indoor horse power=8.0HP
--	--	--	--	1	1	1	0	indoor horse power=10.0HP
--	--	--	--	1	1	1	1	indoor horse power=15.0HP

B. Indoor address setting when in central control by central controller: SW02 (only on the master unit).

SW02								description
[1]	[2]	[3]	[4]	[5]	[6]	[7]	[8]	
__	0	0	0	0	0	0	0	central control address=1
__	0	0	0	0	0	0	1	central control address=2
----					----			
__	1	1	1	1	1	1	0	central control address=127
__	1	1	1	1	1	1	1	central control address=128
0								set central control address by wired controller
1								Forbidden to set address by wired controller

C. Indoor communication address

SW03								description
[1]	[2]	[3]	[4]	[5]	[6]	[7]	[8]	
__	-	0	0	0	0	0	0	central control address=1
__	-	0	0	0	0	0	1	central control address=2
----					----			
__	-	1	1	1	1	1	0	central control address=63
__	-	1	1	1	1	1	1	central control address=64
-	0							set central control address by wired controller
-	1							Forbidden to set address by wired controller
0								set address automatically
1								set address by hand

There are three kinds of address setting method for indoor units: automatical address setting, manual address setting, wired controller setting. Any one of them can set the address and wired controller setting type has the highest priority.

D. TA correction value in AUTO mode and Tdif: SW07-1, SW07-2 (written in EEPROM)

When out of factory, SW05 has been set and can not be changed at random.

SW07-1	function
1	TA correction value is available in AUTO mode
0	TA correction value is unavailable in AUTO mode
SW07-2	function
1	Tdif = 3℃
0	Tdif = 2℃

Note: Mode changeover condition: when TA<set temp.-1-Tdif, running mode is HEAT; when TA≥set temp.+TA correction value+1+Tdif, running mode is COOL.

E: Indoor temp. sensor selection:SW07-3

SW07-3	function
0	indoor ambient temp. and heating set temp. correction value be controlled simultaneously
1	indoor ambient temp. and heating set temp. correction value be controlled individually

Note: "indoor ambient temp. and heating set temp. correction value be controlled simultaneously" is that when in group control (wired controller: 1 to x), the indoor ambient temp. and heating set temp. correction value of slave unit are as the same as that of the master unit; "indoor ambient temp. and heating set temp. correction value be controlled individually" is that the two values of slave unit and master unit are controlled by the individual indoor unit.

F. Inlet air temp. TA correction value: (SW07-4,SW07-5, be written in EEPROM)

When out of factory, SW05 has been set and can not be changed at random.

SW07-5	SW07-4	function
0	0	TA correction value=12℃
0	1	TA correction value=8℃
1	0	TA correction value=4℃
1	1	TA correction value=0℃

G. Filter cleaning time selection:SW07-6

SW07-6	function
1	2500 hrs
0	120 hrs

H. Operation mode changeover of wired controller (SW07-7, SW07-8)

SW07-8	SW07-7	function
0	0	[AUTO] [FAN] [COOL] [DRY] [HEAT]
0	1	[FAN] [COOL] [DRY] [HEAT] [ELECTRIC-HEAT]
1	0	[FAN] [COOL] [DRY]
1	1	[FAN] [COOL] [DRY] [HEAT]

I. Air volume: SW08-1

SW08-1	function
1	normal operation
0	air volume is fixed at high speed (for duct unit)

J. In heating, fan speed selection:SW08-2

SW08-2	function
1	normal operation
0	run at mid. speed in heating though you set high speed

K. 26 degree lock function (SW08-3): in heating mode, though set temp. exceeds 20 degree, count as 20 degree; in cooling mode, though set temp. is below 26 degree, count as 26 degree.

SW08-3	function
1	normal mode
0	26 degree lock is available

L. Indoor priority selection (SW08-4)---pre-set, not available

M. Passive contact selection (SW08-5): room card function

SW08-5	function
1	passive contact function(room card) is available
0	passive contact function(room card) is unavailable

N. Wired control/remote control selection: SW08-6

SW08-6	function
1	wired control type
0	remote control type

O. Indoor installation height selection(SW08-7)

SW08-7	function
1	normal mode
0	when height is over 2.7m, indoor motor speed will be increased one class: in low speed, unit will run at med speed; in med speed, unit will run at high speed; in high speed, unit will run at high speed(not increased)

P. For twin energy source or not be used (SW08-8)

SW08-8	function
1	TES is not available
0	TES is available

Q. EEV open angle setting manually (CN27, CN29)

When being electrified, short connect CN27, EEV will open fully for 2 minutes; short connect CN29, EEV will open fully for 2 minutes.

R. Time shorting input (CN28)

	function
0	normal
1	1. short connected after being electrified, enter time shorting function 2. short connected when being electrified and reset, enter auto-check function

S. Float switch input (CN13, jumper connected is 1)

	function
1	normal
0	float switch is close (full of water)

2. Dip switch setting of wired controller

new	old	selection item	state	function description
D9	J02	changeover of controller type	0	set as simple controller
			1	set as standard controller
D12	J06	selection of room temp. sensor	0	use room temp. sensor on wired controller
			1	not use room temp. sensor on wired controller
D15	J07	auto restart	0	without auto restart
			1	with auto restart
D14	J03	selection of room temp. display	0	display room temp.
			1	not display room temp.

new	old	selection item	state	function description
SW[1]	SW20-[1]	changeover of master/slave controller	ON	set as slave controller
			OFF	set as master controller
SW[2]	SW20-[2]	°C or °F	ON	°F
			OFF	°C
JP8	D1	shorten time function	0	indoor shorting time
			1	without shorten time
JP7	D2	compulsory defrost	0	send to compulsory defrost signal
			1	normal operation

Note: 1. D1, D2 are the diode, if the two terminals are disconnected, the state is "1"; if the two terminals are connected with a jumper, the state is "0".
2. Only when two controllers control one indoor unit, one of wired controllers can be set as slave controller, and set SW20-[1] as ON, the others keep the state when out of factory, set SW20-[1] as OFF.
3. The old type: there are resistors of J03 and J06 beside the dip switch.

3. Dip switch setting of outdoor

(1) SW01: communication chip selection on connecting board

a. SW01-1,2,3,4 used to select model

		SW01-1	SW01-2	description
SW01-1	pipe length selection	OFF	OFF	pipe length:medium
		OFF	ON	pipe length: long
SW01-2		ON	OFF	pipe length: short
		ON	ON	pipe length:medium
SW01-3	pre-set			
SW01-4	pre-set			

b. SW01-5,6,7,8 used to set outdoor number and to lock outdoor number

outdoor number		SW01-6	SW01-7	SW01-8
0		OFF	OFF	OFF
1		OFF	OFF	ON
2		OFF	ON	OFF
SW01-5	searching outdoor	OFF	begin to search outdoor	
		ON	stop searching outdoor and lock the quantity	

Note: When being electrified for the first time or changing connecting board, or outdoor quantity changes,outdoor number needs to be re-set, after setting the number, set SW01-5 on connecting board of master unit at OFF, then power on. Outdoor unit will begin to search the slave unit, LED1-4 will display slave unit quantity. If displaying 0000, shows only master unit is found; if displaying 1111, shows master unit and No.1 slave unit; if displaying 2222, shows master unit, No.1 slave unit and No.2 slave unit.If the found outdoor quantity is identical with the actual, set SW01-5 at ON. Then stop to search outdoor and lock the outdoor quantity. If the searched outdoor quantity changes after being locked, the master unit will occur failure 1004.

(2) SW02: control chip selection on connecting board

SW02-1	SW02-2	SW03-3	outdoor HP
OFF	OFF	OFF	8HP
OFF	OFF	ON	10HP
OFF	ON	OFF	12HP
OFF	ON	ON	14HP
ON	OFF	OFF	16HP

SW02-4	SW02-5	defrosting constant
OFF	OFF	8
OFF	ON	6
ON	OFF	10
ON	ON	8

SW02-6	wait for 4 hours when being electrified for the first time
OFF	no
ON	yes
SW02-7	forbidden to start up at 25degree in heating mode
OFF	yes
ON	no
SW02-8	pre-set
OFF	pre-set
ON	pre-set

(3) LED on inverter board description

LED	description	normal state	abnormal state
LED1	receiving lamp of communication between inverter board and	sending lamp and receiving lamp will flash in turn at interval of 0.5 second.	not flash or constant-on or constant off, which shows communication between inverter board and connecting board is failure.Check the wires between them and if the inverter board is damaged.
LED5	sending lamp of communication between inverter board and		
LED6	alarm lamp	OFF	flashing 9 times is power module protection; flashing 6 times is over current
LED4	power supply lamp	ON constantly	if it is not light, check power supply and the fuse

(4) LED on connecting board description

LED	description	normal state	abnormal state
LED1	receiving lamp of communication with indoor	sending lamp and receiving lamp will flash in turn at interval of 0.5 second.	not flash or constant-on or constant off, which shows communication is failure.Check the communication wires or if there is too strong interference, or if the PCB is damaged.
LED2	sending lamp of communication with indoor		
LED3	receiving lamp of communication with slave unit	sending lamp and receiving lamp will flash in turn at interval of 0.5 second.	not flash or constant-on or constant off, which shows communication is failure.Check the communication wires or if there is too strong interference, or if the PCB is damaged.
LED4	sending lamp of communication with slave unit		

Note: Other functions of LED

a. If SW01-4 is ON, flash times of LED2 is the first number of the current failure code; flash times of LED1 is the second number of the current failure code; flash times of LED3 is failure code of the current faulty slave unit. If SW01-4 is OFF, the above LEDs will be communication lamp.

b. If SW01-3 is ON, flash times of LED4 shows outdoor capacity. 8HP: flash once; 10HP: flash twice; 12HP: flash 3 times; 14HP: flash 4 times; 16HP: flash 5 times, the other capacity: not flash. Switch SW01-3 at OFF again, the lamp will become receiving lamp of communication with slave unit.

LED	description	set	flash meaning	remarks
LED3	receiving from 849	SW01-4 at ON	faulty outdoor address	read only after re-startup
LED1	1007 receiving	SW01-4 at ON	the second number of failure code	read only after re-startup
LED2	1007 sending	SW01-4 at ON	the first number of failure code	read only after re-startup
LED4	sending to 849	SW01-3 at ON	outdoor capacity	read only after re-startup

(5) Display and function of digital indicating board

a. Connecting method

Connect CN2 and CN31 on digital indicating board and confirm it in good condition. Then connect CN1 and CN30, CN3 and CN32.

Outdoor needs not restart up, you can check the parameters from digital indicating board.

b. Rotary switch

SW01, SW02, SW03: set rotary switch from 0 to 15

LED1, LED2, LED3, LED4: 7-segment digital tube 4 bits display

Press switch: SW03, SW04, SW05, SW06, their functions are as follow:

press switch	press switch
SW03	communication chip (IC2) START
SW04	communication chip (IC2) STOP
SW05	control chip (IC1) STOP
SW06	control chip (IC1) START

c. Indoor parameters: check the parameters of indoor units from No.1 to No.64.

SW03: number range from 3 to 15. shows indoor parameters.

SW01, SW02: indoor number.

press switch	description
SW03	communication chip (IC2) START
SW04	communication chip (IC2) STOP
SW05	control chip (IC1) STOP
SW06	control chip (IC1) START

SW01	SW02	address
0	0~15	1~16
1		17~32
2		33~48
3		49~64

LED	description	normal state
3	indoor communication inspection	LED3, LED4 display 1111; if there is no this indoor or no communication, display ----
4	indoor failure	LED3, LED4, 1.5HP: display 1.5
5	indoor capacity	display indoor capacity
6	indoor EEV open angle	LED2, LED3, LED4 display valve open angle
7	air inlet temp.	LED2, LED3, LED4 display air inlet temp.
8	indoor gas pipe temp.	LED2, LED3, LED4 display air pipe temp.
9	indoor liquid pipe temp.	LED2, LED3, LED4 display liquid pipe temp.
10	display current state	display current state

d. Outdoor parameter

SW03: display range: 0~2, shows outdoor parameter.

SW01: used to outdoor number, SW01 at 0 shows check parameter of outdoor No. 0(master unit); SW01 at 1 shows check parameter of outdoor No. 1; SW01 at 2 shows check parameter of outdoor No.2.

SW01	SW02	SW03	function	description
No.0~2	0	0	display outdoor failure code	outdoor bus line transmits failure code
	2	0	display running mode	HEAT; or COOL
	3	0	outdoor capacity	16.0: 16HP; 8.0: 8HP
	4	0	outdoor total running frequency	210 shows 210Hz(No.0 unit displays total running frequency. non-No.0 unit display its own running frequency)
	5	0	slave unit running frequency	running frequency of inverter compressor
	6	0	outdoor motor running speed	4 shows 4-speed
	7	0	outdoor backup running	0001 inverter unit in backup running 0010 fixed frequency unit 1 in backup running 0100 fixed frequency unit 2 in backup running ---- in normal operation
	8	0	outdoor valve state	LED1: 1 ON; 4WV: 0 OFF LED2: 1 ON; SV1: 0 OFF LED3: 1 ON; SV2: 0 OFF LED4: 1 ON; SV3: 0 OFF
	9	0	outdoor valve state and electric heater	LED1: 1 ON; SV4: 0 OFF LED2: 1 ON; SV5: 0 OFF LED3: 1 ON; SV6: 0 OFF LED4: 1 ON; CH1: 0 OFF
	10	0	outdoor EEV1 open angle	0-480 step
	11	0	outdoor EEV2 open angle	0-480 step
	12	0	fixed frequency compressor state	LED1: 1 ON; 0 OFF(fixed frequency compressor 1) LED2: 1 with; 0 without(fixed frequency compressor 1) LED3: 1 ON; 0 OFF(fixed frequency compressor 2) LED4: 1 with; 0 without(fixed frequency compressor 2)
	13	0	outdoor valve state and electric heater	LED1: 1 ON; CH2 0 OFF(fixed frequency compressor 2) LED2: 1 ON; CH 0 OFF(inverter compressor) LED3: 1 ON; HH 0 OFF(useless) LED4: 1 ON; relay of motor 0 OFF

SW01	SW02	SW03	function	description
No.0~2	0	1	Pd pressure	kg
	1	1	Ps pressure	kg
	2	1	TD1 inverter discharging temp.	LED1, LED2, LED3 will display. For example, -15 degree
	3	1	TS suction temp.	LED1, LED2, LED3 will display. For example, -15 degree
	4	1	TE defrosting temp.	LED1, LED2, LED3 will display. For example, -15 degree
	5	1	TA ambient temp.	LED1, LED2, LED3 will display. For example, -15 degree
	6	1	TD1 fixed frequency1 discharging temp.	LED1, LED2, LED3 will display. For example, -15 degree
	7	1	useless	
	8	1	useless	
	9	1	TD2 fixed frequency2 discharging temp.	LED1, LED2, LED3 will display. For example, -15 degree
	10	1	current of fixed frequency1	LED1, LED2, LED3 will display. For example, 530
	11	1	current of inverter compressor	LED1, LED2, LED3 will display. For example, 25.5
	12	1	current of fixed frequency2	LED1, LED2, LED3 will display. For example, 25.5
	15	1	defrosting compensation	10, 8, 6

e. Information center of master unit: display data of the whole system

SW01	SW02	SW03	function	description
0	0	2	refrigerant type	407 stands for R407C
				410 stands for R410A ; default display
				R22 shows R22 refrigerant
0	1	2	outdoor total capacity	40.0 stands for 40HP
0	2	2	outdoor QTY in one system	e.g.: 4 outdoors (excluding inverter outdoor)
0	3	2	indoor QTY in one system	e.g.: 64 indoors
0	4	2	running indoor QTY	depend on if thermostat is ON
0	5	2	indoor QTY whose operation modes are as the same as that of outdoor	e.g.: 13 indoors
0	6	2	capacity correction class	0: short piping length; 1: medium piping length;
				2: long piping length
0	7	2	over match inspection	135: max. limitation; 000: no limitation
0	12	2	indoor valves open fully	press SW04, displays 1111, indoor valves open 2 minutes fully
0	13	2	all indoors running in cooling mode	press SW04 for 2 seconds to start and press SW03 for 2 seconds to stop, all indoors will start up as cooling mode (ignore air inlet temp.) and run as compulsory cooling mode. EEV open angle is at the standard position. Digital tube displays PS low pressure. Outdoor is in normal control, and indoors are all running in cooling mode. Note: in compulsory condition, indoor capacity code will be maximum, and thermostat will not be OFF, the unit will work all the way.
0	14	2	all indoors running in heating mode	press SW04 for 2 seconds to start and press SW03 for 2 seconds to stop, all indoors will start up as heating mode (ignore air inlet temp.) and run as compulsory heating mode. EEV open angle is at the standard position. Digital tube displays PD low pressure. Outdoor is in normal control, and indoors are all running in heating mode. Note: in compulsory condition, indoor capacity code will be maximum, and thermostat will not be OFF, the unit will work all the way.
0	15	2	rated operation	according to indoor mode, press SW04 for 2 seconds, display "yes" shows the unit enters rated operation. Press SW03 for 2 seconds, display ---- shows the unit quits rated operation. Outdoor control: outdoor will make rated operation according to indoor mode after startup and the horse power at startup, frequency of 1HP is 12Hz. The others will be controlled automatically. Frequency will be counted due to indoor capacity, not from pressure.

WARNING: In the above table, after debugging, MUST quit the set of 0, 13, 2/0, 14, 2. In normal operation, start up the unit from indoor unit, or the indoor will not stop even it has arrived the set temperature.

f. Inspection of outdoor control parts

SW01	SW02	SW03	function	description
6	6	2	EEV1/EEV2 open fully	press SW04 for 2 seconds, EEV1/EEV2 will open, and display 1111. 2 minutes later, it is close; or press SW03, EEV1 will close, and display --
6	7	2	fan motor runs from high speed to low speed	press SW04 to enter and display FAN, outdoor motor has 4-speed control, and run at high speed. Press SW5, SW6 to adjust fan speed by hand. Press SW03 to quit, fan motor stops, and display OFF
6	8	2	outdoor compulsory startup at cooling from 80Hz and adjust due to compressor	press SW04 for 4 seconds and display COOL, enter cooling mode, inverter compressor starts; press SW03, 2 seconds later, it is OFF and display ----.Outdoor control: outdoor enters rated operation, primary running frequency is 10P, and be adjusted due to pressure. The others are controlled automatically.
6	9	2	outdoor compulsory startup at heating from 80Hz and adjust due to compressor	press SW04 for 2 seconds and display HEAT, enter heating mode, inverter compressor starts; press SW03, 2 seconds later, it is OFF and display ----.Outdoor control: outdoor enters rated operation, primary running frequency is 10P, and be adjusted due to pressure. The others are controlled automatically.
6	10	2	compulsory cooling in rated condition	press SW04 for 2 seconds and display COOL, enter cooling mode, inverter compressor starts; press SW03, 2 seconds later, it is OFF and display ----.Outdoor control: outdoor enters rated operation, primary running frequency is 80Hz, and can be adjusted by hand, not be adjusted due to horse power of indoor running units. The others are controlled automatically.
6	11	2	compulsory heating in rated condition	press SW04 for 2 seconds and display HEAT, enter heating mode, inverter compressor starts; press SW03, 2 seconds later, it is OFF and display ----.Outdoor control: outdoor enters rated operation, primary running frequency is 80Hz, and can be adjusted by hand, not be adjusted due to horse power of indoor running units. The others are controlled automatically.

WARNING: In the above table, 6, 8, 2/6, 9, 2/6, 10, 2/6, 11, 2 are FORBIDDEN TO BE USED IN DEBUGGING.

6. Indoor unit control

6.1 Indoor PCB

A. Cooling operation

Set temp. in cooling: Ts=set temp. of wired controller;

After startup, indoor unit will send the request to outdoor according to the temp. difference between the set temp. and the room temp.

B. Heating operation

Set temp. in heating: Ts=set temp. of wired controller+TA correction value.

After startup, indoor unit will send the request to outdoor according to the temp. difference between the set temp. and the room temp.

C. Dry operation

room temp.-set temp.＞2℃, indoor operation is identical with the cooling operation, and send the cooling mode to outdoor;

room temp.-set temp.≤2℃, indoor will send the dry signal to outdoor, and indoor fan motor will run at low speed compulsorily when compressor is running; when room temp. ＜16℃, indoor stops and sends stop signal to outdoor.

In dry operation, the auto mode of indoor fan motor is identical with the cooling mode; EEV control mode is identical with the cooling operation.

D. Fan operation

Indoor fan motor will run at the speed set on the wired controller and sends stop signal to outdoor.

E. Abnormal operation

When the requested mode collides with the outdoor mode, the entering earlier will be in prior.

After indoor receives the startup command from wired controller (remote controller), firstly judge the outdoor current mode. If it is normal mode, the indoor will run as the request of wired controller; if it is abnormal mode, the command can not be executed, and indoor keeps stop; wired controller displays standby mode (if in remote control type, the buzzer will sound twice and the remote controller can not receive the signal). Until the outdoor stops or the outdoor mode is accordant with the requested mode of wired controller (remote controller), the outdoor will work.

COOL (including AUTO COOL), DRY, RECOVERY are regarded as the same mode;

HEAT, RECOVERY are as abnormal mode.

F. Fan speed control of indoor fan motor

a. Adjustment by hand

Set high/mid/low fan speed as the request;

b. Auto fan speed

Confirm the fan speed as the temp. difference between room temp. TA and the set temp.

c. Anti-code air control

In heating mode, after compressor startup, the unit will control indoor fan motor state due to the indoor coil temp.;

In anti-code air period, indoor sends pre-heat signal to wired controller; in outdoor defrosting period, indoor fan motor will stop, and sends defrost signal to wired controller;

After being switched off in heating mode, indoor fan motor will run at low speed and 30 seconds later will stop.

H. Set EEV open angle by hand

When being switched off, short connect CN27 to open the valve fully compulsorily for 2 minutes;

When being switched off, short connect CN29 to close the valve fully compulsorily for 2 minutes.

I. Anti-freezed protection

In cooling mode, execute the anti-freezed protection due to the measured indoor coil temp. to avoid the indoor heat exchanger causeing frost or ice.

J. Other functions

a. Swing motor control

Indoor will control swing motor ON/OFF due to the swing signal from wired controller.

b. Auxiliary electric heater control

In heating mode, if the below conditions can be met, the electric heater will work:

(1) Indoor fan motor and compressor are running;

(2) Air inlet temp. is no more than 22℃;

(3) Room temp. is lower over 2℃ than the set temp.;

(4) Compressor has run for 5 seconds;

Either below condition is met, the electric heater will stop:

(1) Indoor fan motor or compressor not runs;

(2) Indoor air inlet temp. is over 23℃;

(3) Indoor air inlet temp. is higher over -1℃ than the set temp.;

(4) Unit stops or quit the heating mode.

c. Filter cleaning

Check and memorize the running time of indoor fan motor, once arriving the requested time (set by SW07-6), indoor will send filter cleaning signal to wired controller; when indoor recieves the filter reset signal from wired controller, if the time exceeds the requested time, the filter will reset.

d. Compulsory defrosting: after indoor receives the compulsory defrosting signal from wired controller, it will send compulsory defrosting signal to outdoor contineously for 10 times. In the sending period, indoor will execute the normal defrost.

e. Trial operation

Set the mode as cooling (heating), press ON/OFF for 5 seconds to enter compulsory cooling (heating).

In compulsory cooling, display "LL" and COOL will flash; fan speed is AUTO.

In compulsory heating, display "HH" and HEAT will flash, fan speed is AUTO.

At this time, only ON/OFF is valid.

6.2 Wired controller

When wired controller is electrified for the first time, the controller will display all info for 2 seconds, then LED and CLOCK area will change:"8888"→"888"

→"88"→"8" and flash for about 30 seconds, all buttons are invalid.

Buttons description:

A. ON/OFF

Press ON/OFF button to start up or stop the unit; when running, LED will be on, when in stop, LED will be off.

When the unit stops at cooling mode or heating mode, press ON/OFF for 5 seconds to enter the compulsory operation.

B. MODE

a. In group control, the master unit mode depends on the operation mode range that the wired controller can display and can be set.

b. After being electrified again, the displayed mode is the latest mode.

c. Press MODE, the modes will change as below (only in the mode range of the master unit): [FAN]→[COOL]→[DRY]→[HEAT]→[AUTO]→[FAN].

C. FAN

Press FAN button, the fan speed will change as follow: [AUTO]→[HIGH]→[MID]→[LOW]→[AUTO]

If the master indoor unit requests fan speed to be fixed, so the fan speed can not be changed and display fan speed [FIX]. After being electrified, the displayed fan speed is the latest mode. In compulsory operation, fan speed displays [AUTO].

D. SWING

The master unit will depend if the wired controller can display and set SWING function.

Every time press SWING button, the swing mode changes as follows:

[OFF]→[SWING]→[OFF].

E. TEMP +/-

In RECOVERY mode, there is no set temp.; after being electrified again, the displayed temp. is the latest temp.

Every time press TEMP +/- button, SET icon will display and the set temp. will increase/decrease 1 degree; keep pressing it, within 5 seconds, the set temp. will change at 1 degree/0.5 second; if no pressing within 10 seconds, the temp. will display the room temp., SET icon will be off and ROOM TEMP icon will be on; by adjusting SW01-2, realize the change between degree celsius and degree fahrenheit.

F. The other buttons

Refer to the information in the "controller installation".

G. Special functions

a. Indoor central control address setting

On the condition that indoor dip switch allows the wired controller to set the central control address, press FILTER button for 10 seconds to enter central control address setting mode. Select the address by TEMP +/- button.

Temp. dispaly area: [central address]+XX, herein XX is the hex digit, press TIME +/- button to change in 0-7F, and the preliminary is 00; press SET to confirm the setting and quit out; if press the other buttons or no any operation in 15 seconds, quit the setting automatically and keep the set of last time.

b. Communication address setting of outdoor and indoor

On the condition that indoor dip switch allows the wired controller to set the communication address, press FILTER button for 5 seconds to enter central control address setting mode. Select the address by TEMP +/- button.

Temp. dispaly area: [system address]+XX, herein XX is the hex digit, press TIME +/- button to change in 0-3F, and the preliminary is 00; press SET to confirm the setting and quit out; if press the other buttons or no any operation in 15 seconds, quit the setting automatically and keep the set of last time.

c. Query indoor malfunction history

In the state of power on or power off, press [CHECK] button, enter the malfunction-querying mode of

all indoor units in the group. Then [CHECK] and [UNIT NO.] will display, and the actual indoor numbers will be displayed in some sequence (unit number is in decimals). At the same time, in the time region, there will be the current malfunction and the latest time malfunction, the displaying format is [XX:YY], in which XX stands for the current malfunction, if normal, it will display "--"; YY stands for the latest time malfunction. The failure code of every unit will display for 3 seconds. After the failure codes of all indoor units in the whole group are displayed, the mode will quit automatically.

d. Clear abnormal state and malfunction history

In normal state, press [CHECK] button for 5 seconds, the malfunction history in wired controller will be cleared.

e. Query indoor performance state:

In normal state, press both buttons of [CHECK] and [FILTER] for 5 seconds, in the set temperature region in the screen, [XX] will display, XX is indoor number, which can be selected by pressing [TEMP] [+] [-]. In the timer region in the screen, [YZZZ] will display, in which Y stands for data type, ZZZ stands for the corresponding data. which can be selected by pressing [CLOCK] [+] [-].

Y	ZZZ	Type
A	Temperature of indoor ambient temp. sensor TA	Actual value, decimal
B	Temperature of indoor gas pipe temp. sensor TC1	Actual value, decimal
C	Temperature of indoor liquid pipe temp. sensor TC2	Actual value, decimal
D	Indoor EEV open angle	Actual value/2, decimal

Press CHECK to quit the query state and back to the normal state.

f. Compulsorily defrost

In heating mode, D2 is in short circuit, it will enter compulsorily defrost mode; cut off D2, it will quit.

g. Shorten time function

In normal operation, D1 is in short circuit, it will enter shorten time mode, and the time will be shortened in the proportion of 60:1. In shorten time mode, LED will flash at the frequency of 0.5 second. Cut off D1, it will quit the shorten time mode and return to the normal operation mode.

H. Difference between master wired controller and slave wired controller

item	master wired controller	slave wired controller
function	all functions	only can set ON/OFF, MODE, FAN, SET TEMP, SWING

7. Outdoor control

(1) Running mode

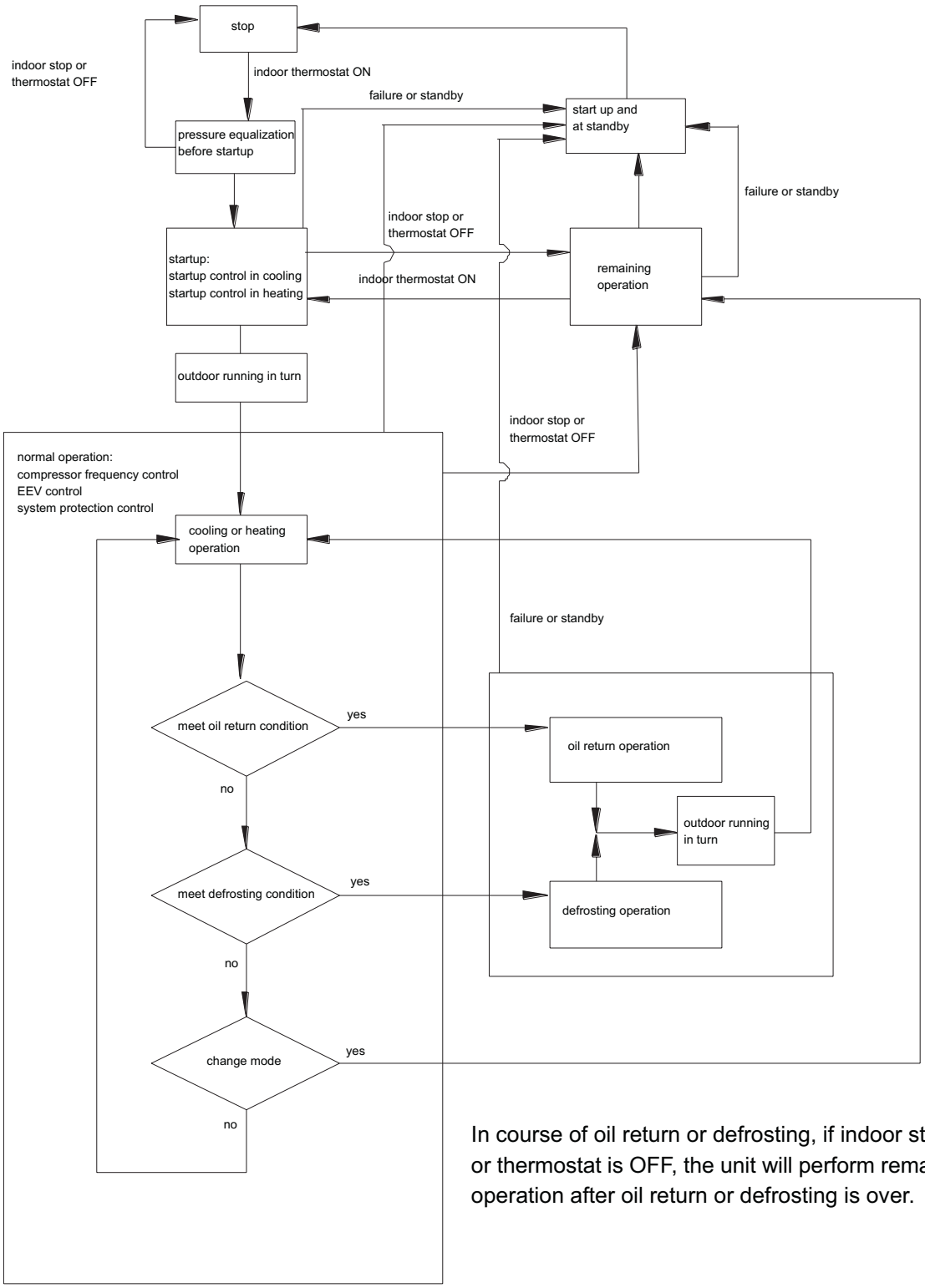

In course of oil return or defrosting, if indoor stops or thermostat is OFF, the unit will perform remaining operation after oil return or defrosting is over.

(2) Normal operation

Cooling mode

part name	state	remarks
compressor	adjust output due to system pressure	compressor upper frequency will be limited when high pressure protection, low pressure protection, discharging temp. protection, or current protection works.
fan	adjust fan speed due to system pressure	when ambient temp. is too low, fan motor stops or runs and stops in turn.
4-way valve	OFF	
unloading valve(SV1)	OFF	open when high pressure protection works
oil equalization valve(SV2)	OFF	open in oil equalization operation
refrigerant jet valve(SV3)	OFF	open when discharging temp. is too high
pressure equalization valve(SV6)	OFF	open in oil equalization operation

Heating mode

part name	state	remarks
compressor	adjust output due to system pressure	compressor upper frequency will be limited when high pressure protection, low pressure protection, discharging temp. protection, or current protection works.
fan	adjust fan speed due to system pressure	when ambient temp. is too high, fan motor stops or runs and stops in turn.
4-way valve	ON	close in defrosting or oil return
unloading valve(SV1)	OFF	open when high pressure protection works
oil equalization valve(SV2)	OFF	open in oil equalization operation
refrigerant jet valve(SV3)	OFF	open when discharging temp. is too high
pressure equalization valve(SV6)	ON	

(3) Compressor control

a. Compressor running priority

Compressor will run in priority as follows:

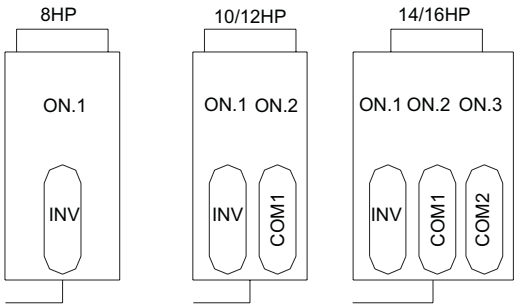

18HP

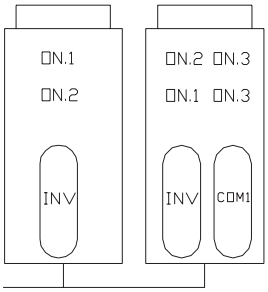

20/22HP

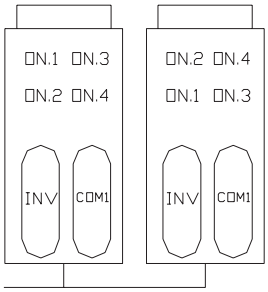

24/26/28HP

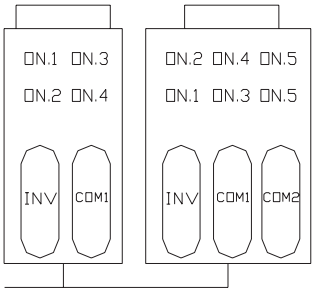

30/32HP

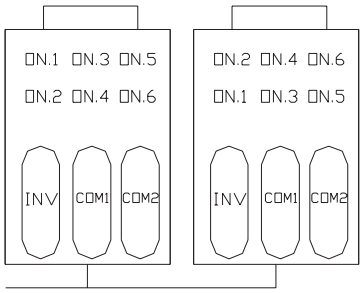

34/36/38HP

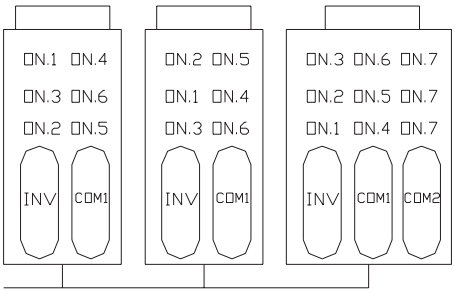

40/42/44HP

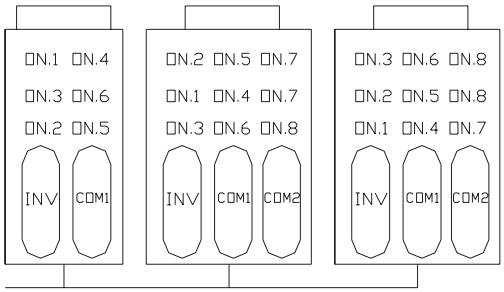

46/48HP

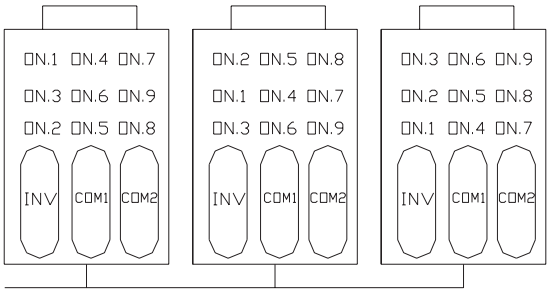

b. Variety of compressor output

No.	module 1(master unit)			module 2			module 3			total capacity
	INV	INV1	INV2	INV	INV1	INV2	INV	INV1	INV2	
	NO.1	NO.4	NO. 7	NO.2	NO.5	NO.8	NO.3	NO.6	NO.9	
1	30	-	-	-	-	-	-	-	-	30
2	40	-	-	-	-	-	-	-	-	40
3	50	-	-	-	-	-	-	-	-	50
4	60	-	-	-	-	-	-	-	-	60
5	70	-	-	-	-	-	-	-	-	70
6	80	-	-	-	-	-	-	-	-	80
7	90	-	-	-	-	-	-	-	-	90
8	40	-	-	60	-	-	-	-	-	100
9	50	-	-	60	-	-	-	-	-	110
10	60	-	-	60	-	-	-	-	-	120
11	70	-	-	60	-	-	-	-	-	130
12	80	-	-	60	-	-	-	-	-	140
13	90	-	-	60	-	-	-	-	-	150
14	40	-	-	60	-	-	60	-	-	160
15	50	-	-	60	-	-	60	-	-	170
16	60	-	-	60	-	-	60	-	-	180
17	70	-	-	60	-	-	60	-	-	190
18	80	-	-	60	-	-	60	-	-	200
19	90	-	-	60	-	-	60	-	-	210
20	40	ON	-	60	-	-	60	-	-	220
21	50	ON	-	60	-	-	60	-	-	230
22	60	ON	-	60	-	-	60	-	-	240
23	70	ON	-	60	-	-	60	-	-	250
24	80	ON	-	60	-	-	60	-	-	260
25	90	ON	-	60	-	-	60	-	-	270
26	40	ON	-	60	ON	-	60	-	-	280
27	50	ON	-	60	ON	-	60	-	-	290
28	60	ON	-	60	ON	-	60	-	-	300
29	70	ON	-	60	ON	-	60	-	-	310
30	80	ON	-	60	ON	-	60	-	-	320
31	90	ON	-	60	ON	-	60	-	-	330
32	40	ON	-	60	ON	-	60	ON	-	340
33	50	ON	-	60	ON	-	60	ON	-	350
34	60	ON	-	60	ON	-	60	ON	-	360
35	70	ON	-	60	ON	-	60	ON	-	370
36	80	ON	-	60	ON	-	60	ON	-	380
37	90	ON	-	60	ON	-	60	ON	-	390
38	40	ON	ON	60	ON	-	60	ON	-	400
39	50	ON	ON	60	ON	-	60	ON	-	410
40	60	ON	ON	60	ON	-	60	ON	-	420
41	70	ON	ON	60	ON	-	60	ON	-	430
42	80	ON	ON	60	ON	-	60	ON	-	440
43	90	ON	ON	60	ON	-	60	ON	-	450
44	40	ON	ON	60	ON	ON	60	ON	-	460
45	50	ON	ON	60	ON	ON	60	ON	-	470

No.	module 1(master unit)			module 2			module 3			total capacity
	INV	INV1	INV2	INV	INV1	INV2	INV	INV1	INV2	
	NO.1	NO.4	NO. 7	NO.2	NO.5	NO.8	NO.3	NO.6	NO.9	
46	60	ON	ON	60	ON	ON	60	ON	-	480
47	70	ON	ON	60	ON	ON	60	ON	-	490
48	80	ON	ON	60	ON	ON	60	ON	-	500
49	90	ON	ON	60	ON	ON	60	ON	-	510
50	40	ON	ON	60	ON	ON	60	ON	ON	520
51	50	ON	ON	60	ON	ON	60	ON	ON	530
52	60	ON	ON	60	ON	ON	60	ON	ON	540
53	70	ON	ON	60	ON	ON	60	ON	ON	550
54	80	ON	ON	60	ON	ON	60	ON	ON	560
55	90	ON	ON	60	ON	ON	60	ON	ON	570
56	70	ON	ON	90	ON	ON	60	ON	ON	580
57	80	ON	ON	90	ON	ON	60	ON	ON	590
58	90	ON	ON	90	ON	ON	60	ON	ON	600
59	70	ON	ON	90	ON	ON	90	ON	ON	610
60	80	ON	ON	90	ON	ON	90	ON	ON	620
61	90	ON	ON	90	ON	ON	90	ON	ON	630

c. Compressor capacity output control

According to high/low pressure detected by pressure sensor, control compressor frequency to keep low pressure in cooling mode and high pressure in heating mode more stable, in result, confirm compressor working perfectly.

(4) EEV control

Keep the over heat state at outdoor suction side of heat exchanger stable by controlling EEV open angle. Accordingly, utilize outdoor heat exchanger fully.

SH=Ts-Ps

SH: over heat state at outdoor heat exchanger outlet

Ts: outdoor heat exchanger outlet temperature

Ps: saturated temperature at low pressure

Over heat value is 6 degree as the best, and will be corrected due to over heat state of compressor discharging.

(4) Protection control

High pressure protection in cooling mode

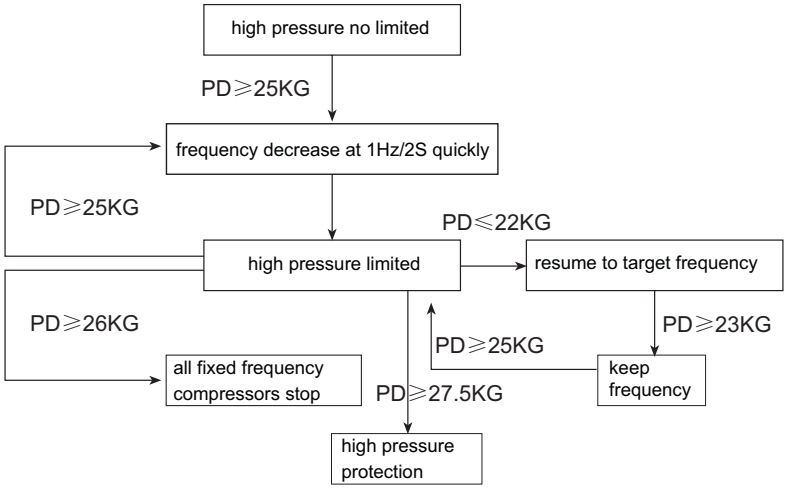

High pressure protection in heating mode

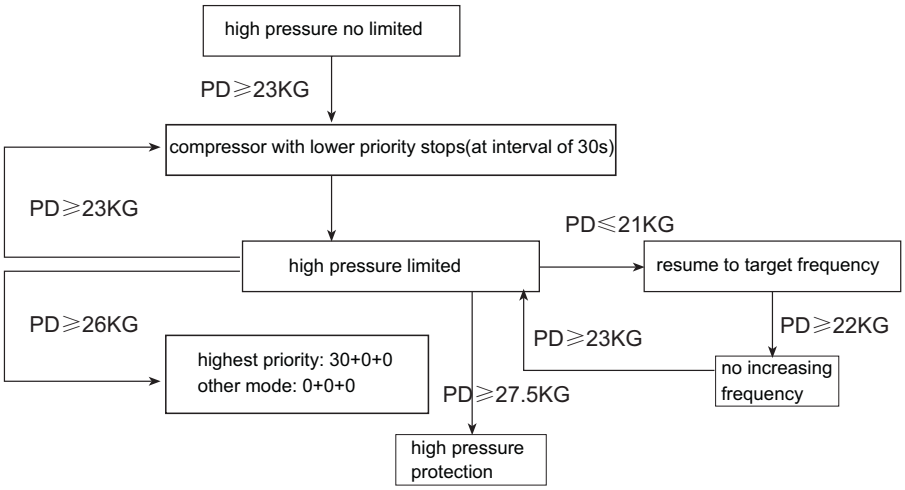

Low pressure protection in cooling mode

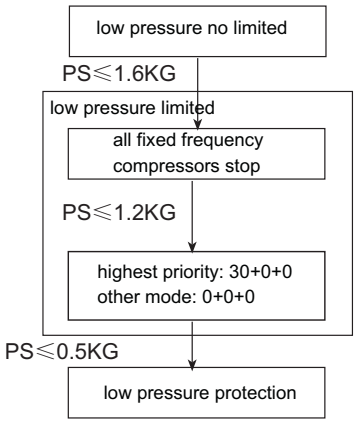

Low pressure protection in heating mode

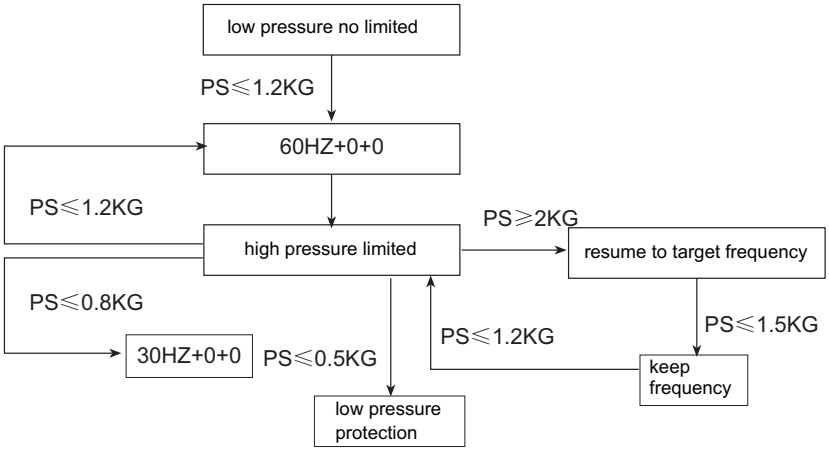

(6) Forbidden to run in heating mode

When outdoor ambient temperature is over 25 degree, outdoor can not run in heating mode.

5. Maintenance

5.1 Trouble diagnose

1. Outdoor communication failure code

Trouble shooting for communication chip TMP86FS49 of connecting board

failure code	judgement		remarks
1001	EEPROM failure	wrong inspection	unresumable
1002	communication with indoor failure	no communication with indoor for 4 minutes	unresumable
1003	communication failure with 849 on master unit PCB		unresumable
1004	communication failure with 849 on the other unit PCB		unresumable
1005	capacity limitation	indoor over capacity, beyong the range(50-135%)	unresumable
1006/1007	4-way valve switchover failure	master unit sends order, slave unit no respond	unresumable

2. Outdoor control failure code

Trouble shooting for main control chip TMP86FS49 of connecting board

failure code	judgement		remarks
20	discharging sensor circuit abnormal of inverter compressor	after compressor has running for 5 minutes, detect that sensor resistor is below 20 or over 1000 for 60 seconds, no alarm in defrosting or within 3 minutes after defrosting. outdoor PCB will display and send to indoor	2 minutes and 30 seconds later, resume
21	suction temp. sensor circuit abnormal	detect that sensor resistor is below 20 or over 1000 for 60 seconds, no alarm in defrosting or within 3 minutes after defrosting. outdoor PCB will display and send to indoor	2 minutes and 30 seconds later, resume
22	defrosting coil temp. sensor circuit abnormal	detect that sensor resistor is below 20 or over 1000 for 60 seconds, no alarm in defrosting or within 3 minutes after defrosting. outdoor PCB will display and send to indoor	2 minutes and 30 seconds later, resume
23	ambient temp. sensor circuit abnormal	detect that sensor resistor is below 20 or over 1000 for 60 seconds, no alarm in defrosting or within 3 minutes after defrosting. outdoor PCB will display and send to indoor	2 minutes and 30 seconds later, resume
24	high pressure sensor circuit abnormal	detect that sensor resistor is below 20 or over 1000 for 60 seconds, no alarm in defrosting or within 3 minutes after defrosting. outdoor PCB will display and send to indoor	2 minutes and 30 seconds later, resume
25	low pressure sensor circuit abnormal	detect that sensor resistor is below 20 or over 1000 for 60 seconds, no alarm in defrosting or within 3 minutes after defrosting. outdoor PCB will display and send to indoor	2 minutes and 30 seconds later, resume
26	communication with indoor abnormal	no communication with indoor for 4 minutes	resumable
27	discharging temp.too low of inverter compressor	after compressor has running for 10 minutes, Td<Pd+10degree for 10 minutes, unit stops or Td<Pd+15degree for 15 minutes, alarm 3 times within 2 hours, and lock the alarm. No alarm in defrosting or in 10 minutes after defrosting; no alarm in oil return or in 10 minutes after oil return, compressor stops for 2 minutes and 50 seconds when failure not being confirmed, resume automatically. The former 2 times will not be sent to indoor, outdoor PCB displays failure code. The third alarm within 2 hours will be sent to indoor	non-resumable after confirmation
28	high pressure too high	after compressor starts up, high pressure is higher than 27.6kg(E) for 5 seconds, unit stops and alarms. Failure will be confirmed if occurs 3 times in 1 hour. When not being confirmed, compressor stops for 2 minutes and 50 seconds, resume automatically. The former 2 times will not be sent to indoor, outdoor PCB displays failure code. The third alarm within 2 hours will be sent to indoor	non-resumable after confirmation
29	low pressure too low	after compressor starts up, low pressure is lower than 0.5kg(E) for 5 seconds, unit stops and alarms. Failure will be confirmed if occurs 3 times in 1 hour. When not being confirmed, compressor stops for 2 minutes and 50 seconds, resume automatically. The former 2 times will not be sent to indoor, outdoor PCB displays failure code. The third alarm within 2 hours will be sent to indoor	non-resumable after confirmation
30	high pressure switch protection	when compressor starts up, switch is cut off for 5 seconds, unit will alarm, if it occurs 3 times in 1 hour, confirm the failure. When not being confirmed, compressor stops for 2 minutes and 50 seconds, resume automatically.	non-resumable after confirmation
31	IPM protection	IPM overcurrent, in short circuit, temp. too high, or voltage too low, 3 minutes later after protection alarms, resume automatically. Failure will be confirmed if occurs 3 times in 1 hour. When not being confirmed, compressor stops for 2 minutes and 50 seconds, resume automatically. The former 2 times will not be sent to indoor, outdoor PCB displays failure code. The third alarm within 2 hours will be sent to indoor	non-resumable after confirmation
32	overcurrent protection of inverter compressor or current detector damaged, no output at power module	after compressor starts up, current is over max. value for 5 seconds, or less than 1A, if it occurs 3 times in 1 hour, not resume. Compressor stops for 2 minutes and 50 seconds when failure not being confirmed, resume automatically. The former 2 times will not be sent to indoor, outdoor PCB displays failure code. The third alarm within 2 hours will be sent to indoor	non-resumable
33	connecting board chip 849 no communication	alarm if no communication for 4 minutes between main control chip and communication chip	resumable
34	no communication between connecting board and power module board	alarm if no communication for 4 minutes between connecting board and power module board	resumable
35	EEPROM on connecting board failure	After being electrified, Eeprom 0F0H_0FFH will display, if not, alarm	non-resumable
36	EEPROM on power module board failure	receiving communication failure from inverter board	non-resumable
37	lack of phase or phase sequence incorrect	one phase or two phases in U, V, W not connected or connected reversely	non-resumable

failure code	judgement		remarks
38	lack of refrigerant	running for 30 minutes in cooling mode, Ps<0.1MPa, the unit occurs failure; if running in heating mode, Ts-Ps>15 degree, and EEV open fully for 60 minutes. If alarm occurs 3 times in 5 hours, lock the alarm. No alarm in defrosting and in 10 minutes after defrosting; No alarm in oil return and in 10 minutes after oil return; When not being confirmed, compressor stops for 2 minutes and 50 seconds, resume automatically. The former 2 times will not be sent to indoor, outdoor PCB displays failure code. The third alarm within 5 hours will be sent to indoor	non-resumable
39	model set by dip switch not matches the actual equipment	model set by dip switch not fits the actual equipment (8HP model set by dip switch connects with TD1 or TD2)	non-resumable
44	discharging sensor circuit abnormal of fixed frequency compressor1	after compressor has running for 5 minutes, detect that sensor resistor is below 20 or over 1000 for 60 seconds, no alarm in defrosting or within 3 minutes after defrosting. outdoor PCB will display and send to indoor	resumable
45	discharging sensor circuit abnormal of fixed frequency compressor2	after compressor has running for 5 minutes, detect that sensor resistor is below 20 or over 1000 for 60 seconds, no alarm in defrosting or within 3 minutes after defrosting. outdoor PCB will display and send to indoor	resumable
46	discharging temp. too high of fixed frequency compressor1	after compressor starts up, detect that discharging temp. is over 120 degree(E) for 10 seconds, compressor stops. Failure will be confirmed if occurs 3 times in 1 hour. When not being confirmed, compressor stops for 2 minutes and 50 seconds, resume automatically. The former 2 times will not be sent to indoor, outdoor PCB displays failure code. The third alarm within 1 hours will be sent to indoor	non-resumable after confirmation
47	discharging temp. too high of fixed frequency compressor2	after compressor starts up, detect that discharging temp. is over 120 degree(E) for 10 seconds, compressor stops. Failure will be confirmed if occurs 3 times in 1 hour. When not being confirmed, compressor stops for 2 minutes and 50 seconds, resume automatically. The former 2 times will not be sent to indoor, outdoor PCB displays failure code. The third alarm within 1 hours will be sent to indoor	non-resumable after confirmation
48	overcurrent protection of fixed frequency compressor1 or CT in open circuit	after compressor starts up, current is over max. value for 5 seconds, or over than B (max. [EE]-2A[EE], if it occurs 3 times in 1 hour, not resume. Compressor stops for 2 minutes and 50 seconds when failure not being confirmed, resume automatically. The former 2 times will not be sent to indoor, outdoor PCB displays failure code. The third alarm within 1 hours will be sent to indoor	non-resumable after confirmation
49	overcurrent protection of fixed frequency compressor2	after compressor starts up, current is over max. value for 5 seconds, or over than B (max. [EE]-2A[EE], if it occurs 3 times in 1 hour, not resume. Compressor stops for 2 minutes and 50 seconds when failure not being confirmed, resume automatically. The former 2 times will not be sent to indoor, outdoor PCB displays failure code. The third alarm within 1 hours will be sent to indoor	non-resumable after confirmation
50	CT in open circuit or in short circuit of fixed frequency compressor1	when fixed frequency compressor 1 stops, detect that compressor current is over 1A for 10 seconds, unit alarms, no alarm in defrosting and in 3 minutes after defrosting	resumable
51	CT in open circuit or in short circuit of fixed frequency compressor2	when fixed frequency compressor 2 stops, detect that compressor current is over 1A for 10 seconds, unit alarms, no alarm in defrosting and in 3 minutes after defrosting	resumable
52	discharging temp. too high of inverter compressor	after compressor starts up, detect that discharging temp. is over 120 degree(E) for 10 seconds, compressor stops. Failure will be confirmed if occurs 3 times in 1 hour. When not being confirmed, compressor stops for 2 minutes and 50 seconds, resume automatically. The former 2 times will not be sent to indoor, outdoor PCB displays failure code. The third alarm within 1 hours will be sent to indoor	non-resumable after confirmation

Note: On the condition that multiple compressors are abnormal, failure code of inverter compressor will be displayed with priority. If there are fixed frequency compressors, fixed frequency compressor 1 has higher priority; Detect the data due to horse power as the following, Y shows to detect, N shows not to detect.

input	8HP	10HP	12HP	14HP	16HP
TS	Y	Y	Y	Y	Y
TD1	Y	Y	Y	Y	Y
TD2	N	Y	Y	Y	Y
TD3	N	N	N	Y	Y
PS/PD	Y	Y	Y	Y	Y
TE	Y	Y	Y	Y	Y
compressor current	Y	Y	Y	Y	Y
pressure switch	Y	Y	Y	Y	Y
CT1	N	Y	N	Y	Y
CT2	N	N	N	Y	Y
output	8HP	10HP	12HP	14HP	16HP
PMV1	Y	Y	Y	Y	Y
PMV2	N	N	Y	Y	Y
fan motor1	Y	Y	Y	Y	Y
fan motor2	N	Y	Y	Y	Y
compressor1	N	Y	Y	Y	Y
compressor2	N	N	N	Y	Y
heater	Y	Y	Y	Y	Y
heat release motor	Y	Y	Y	Y	Y
4-way valve	Y	Y	Y	Y	Y

3. Indoor failure code list

indication on wired controller	flash times of LED5 on indoor PCB/timer LED on remote receiver	flash times of health LED on remote receiver	failure code definition
01	1	--	indoor ambient temp. sensor Ta failure
02	2	--	indoor coil temp. sensor Tc1 failure
03	3	--	indoor coil temp. sensor Tc2 failure
04	4	--	indoor TES sensor failure
05	5	--	indoor EEPROM failure
06	6	--	communication between indoor and outdoor failure
07	7	--	communication between indoor and wired controller failure
08	8	--	indoor drainage failure
09	9	--	indoor repeated address
0A	10	--	indoor repeated central control address
0C	12	--	failure when PCB detects AC current at piont 0(power cable or power source circuit on PCB failure)
20~87	20	--	outdoor corresponding failure
--	--	1	wall mounted unit P/G motor failure
--	--	2	EEPROM of wall mounted unit board A failure
--	--	3	communication between wall mounted board A and wired controller failure
--	--	4	serial communication failure between wall mounted board A and B
--	--	5	set modes of wall mounted board A and B conflict

Note: When indoor units occur abnormal modes, the earlier entering mode will be prior, and the latter operated unit will be standby. If the unit is remote control type, the buzzer will sound twice, and the sent signal will not be received. It is not failure.

5.2 Trouble shooting

(1) 01: indoor ambient temp. sensor TA failure
02: indoor coil temp. sensor TC1 failure
03: indoor coil temp. sensor TC2 failure
04: indoor TES sensor failure

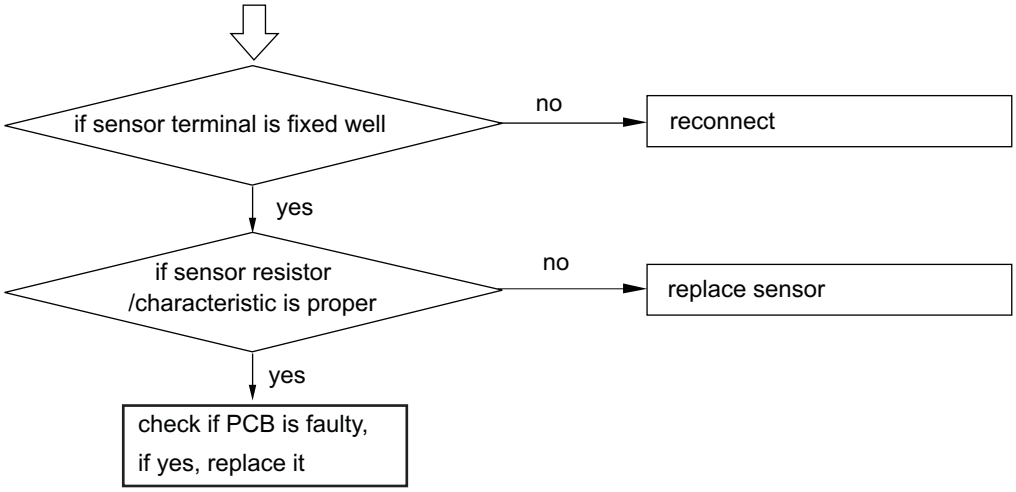

(2) 05: indoor EEPROM failure

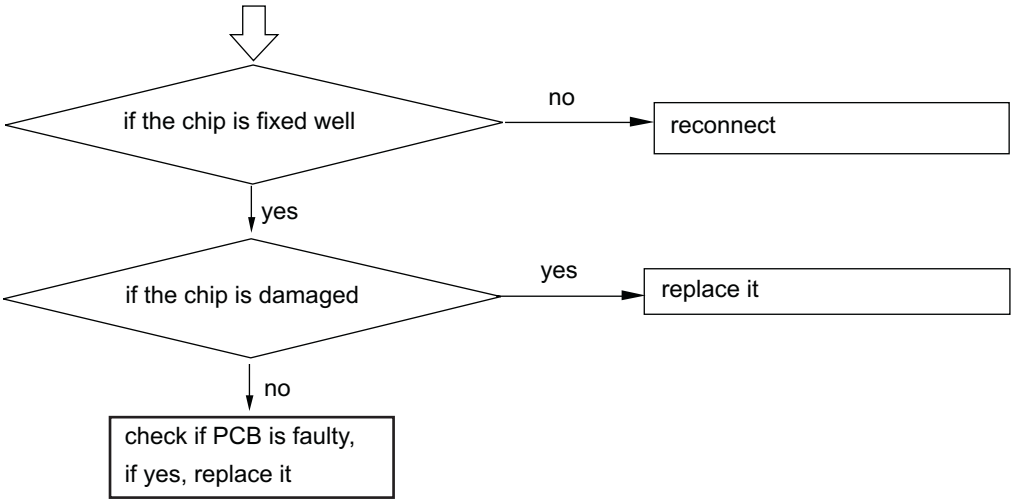

(3) 06: communication between indoor and outdoor abnormal(normally, indoor LED3 and LED4 will flash in turn)

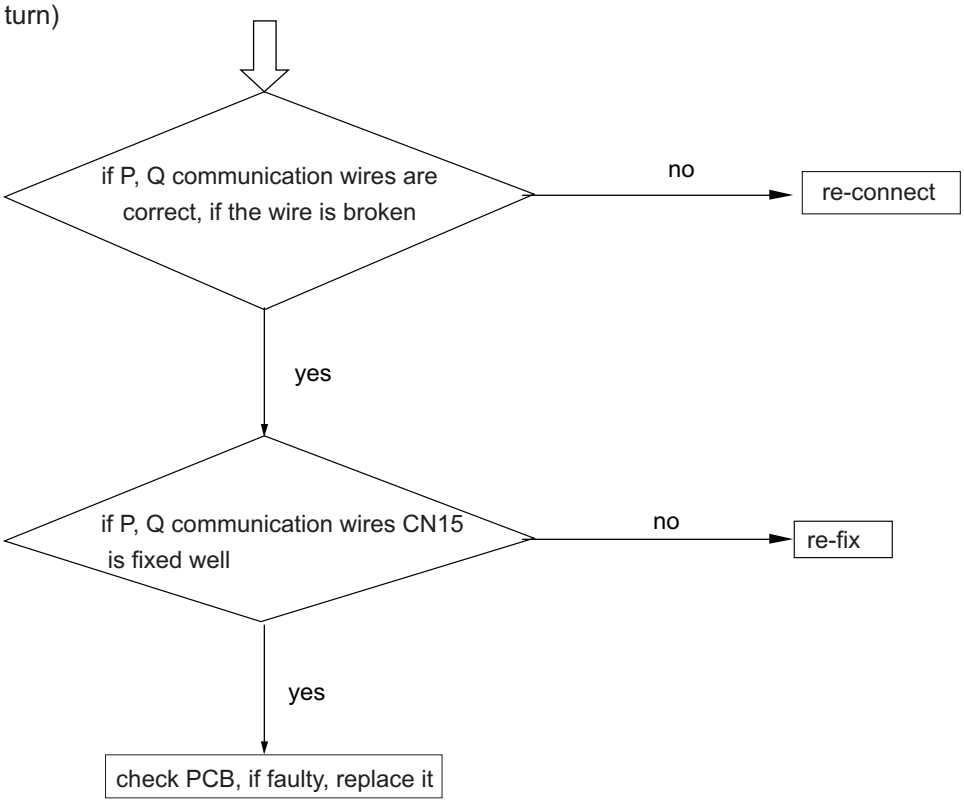

(4) 07: communication abnormal between indoor and wired controller

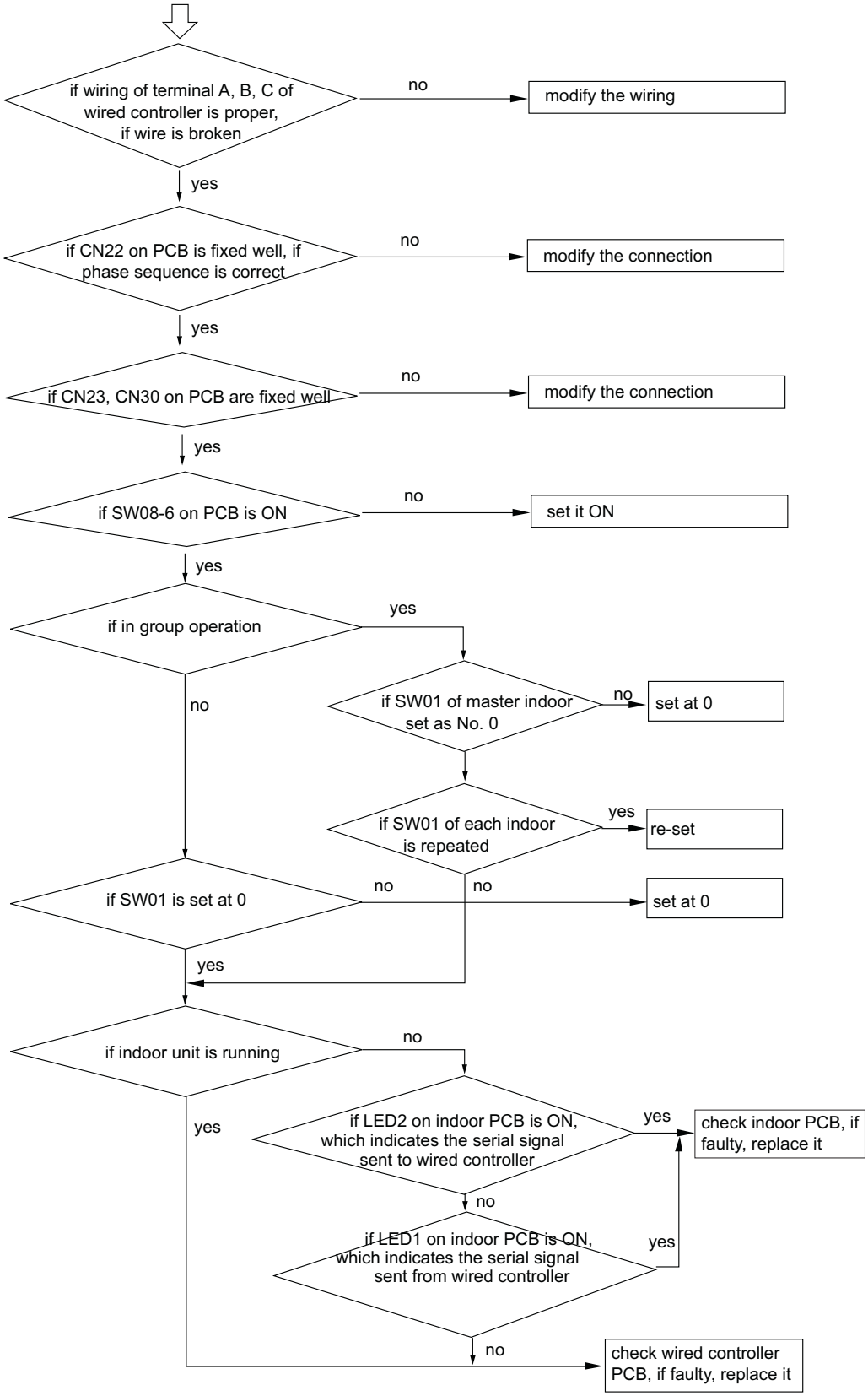

(5) 08: indoor drainage system failure

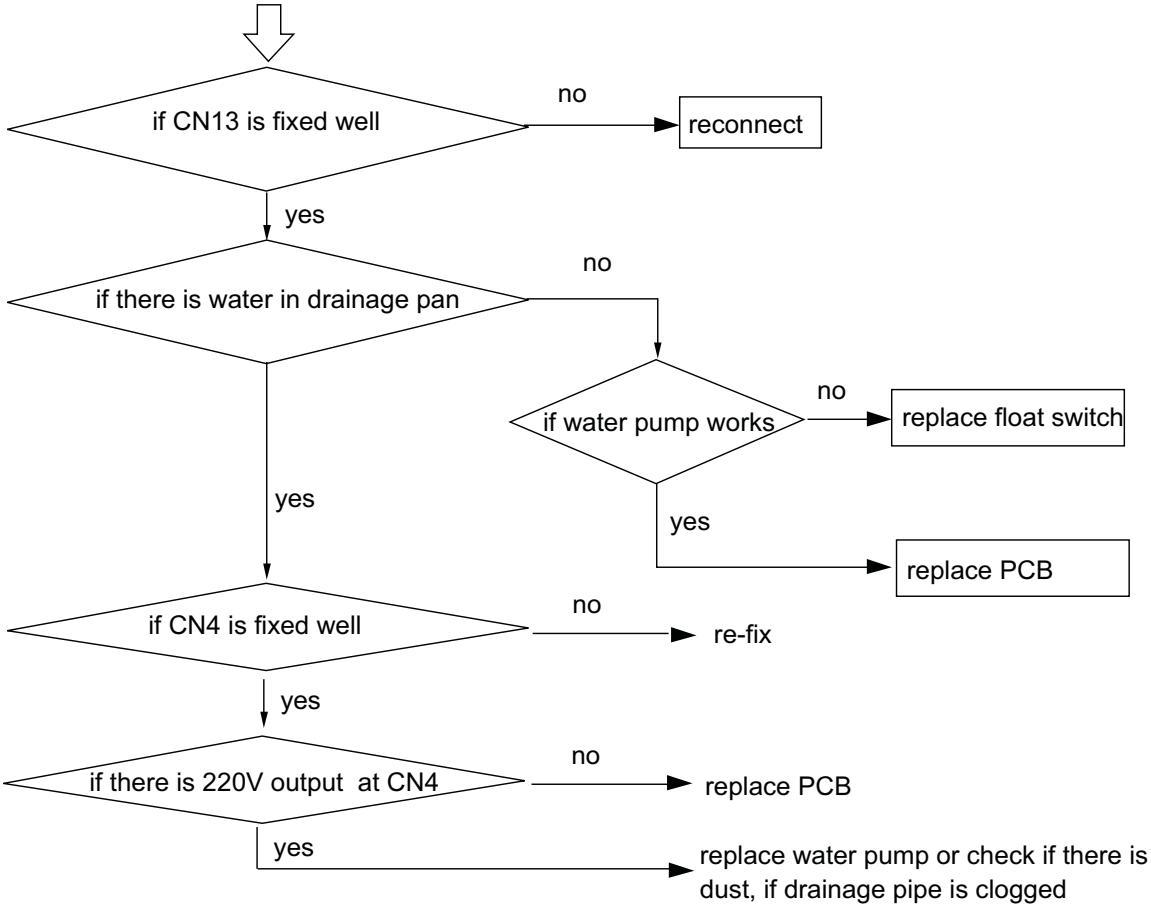

(6) 09: indoor address repeated; 10: central address repeated

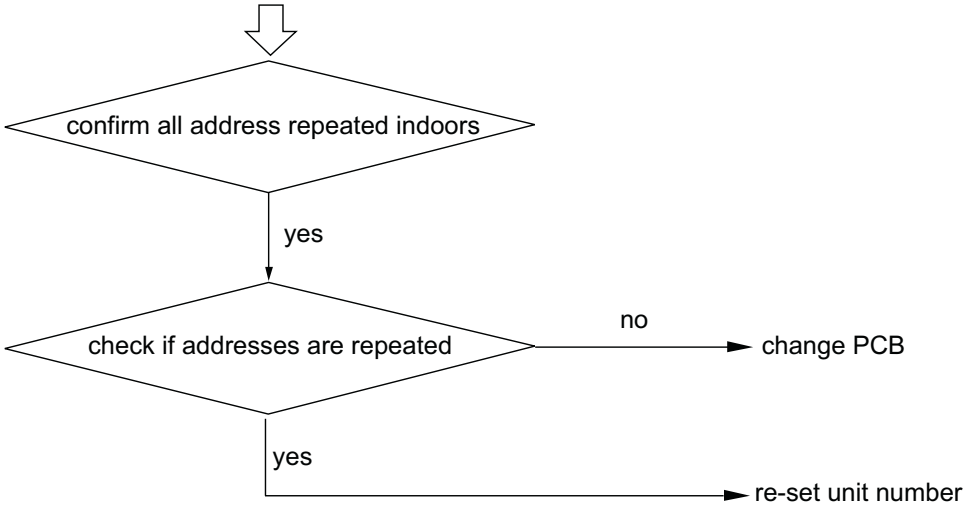

(7) 12: connecting board for wall mounted failure

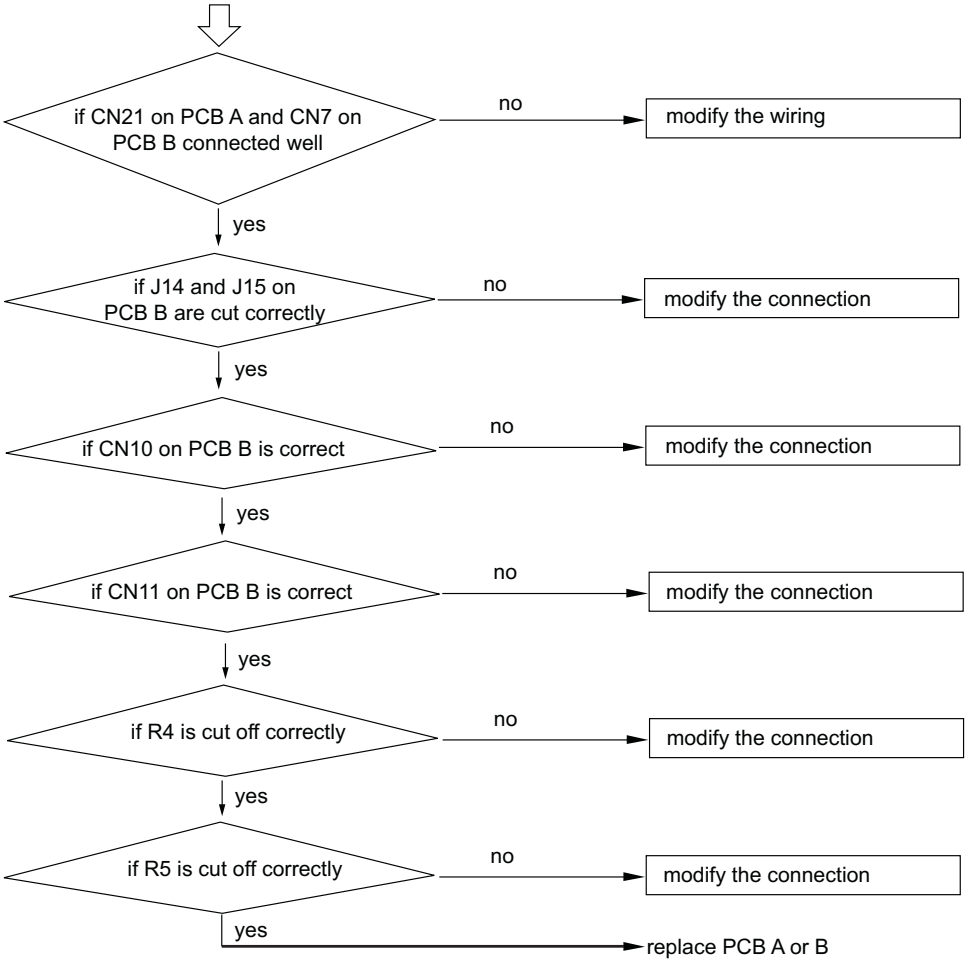

(8) 20: discharging sensor circuit abnormal of inverter compressor
21: suction temp. sensor circuit abnormal
22: defrosting coil temp. sensor circuit abnormal
23: ambient temp. sensor circuit abnormal

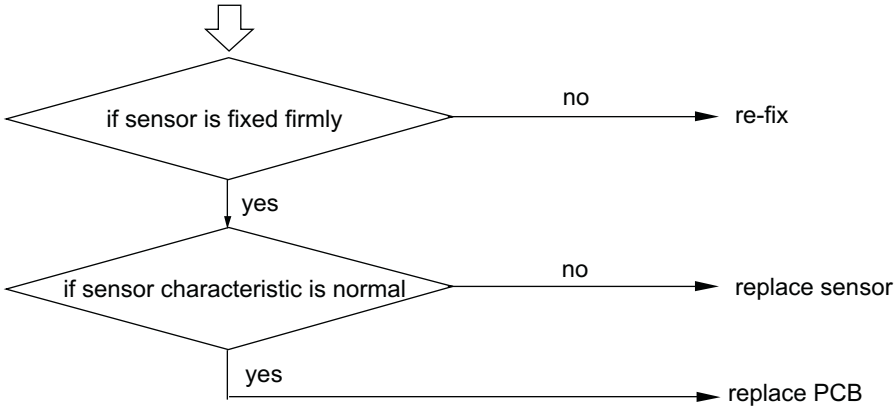

(9) 24: high pressure sensor circuit abnormal

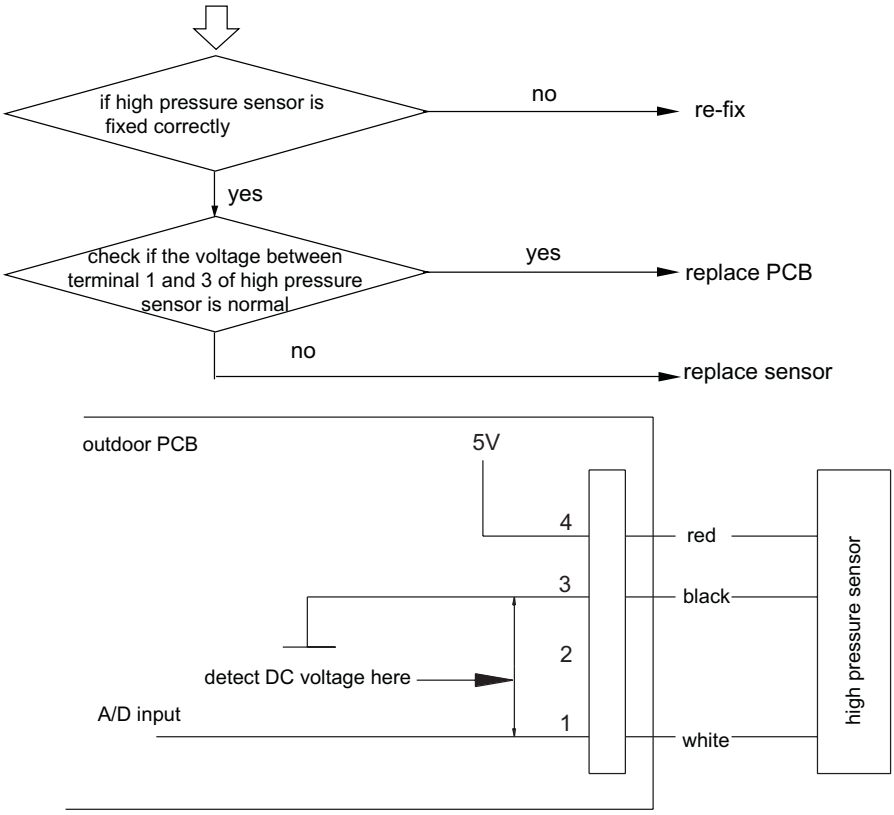

(10) 25: low pressure sensor circuit abnormal

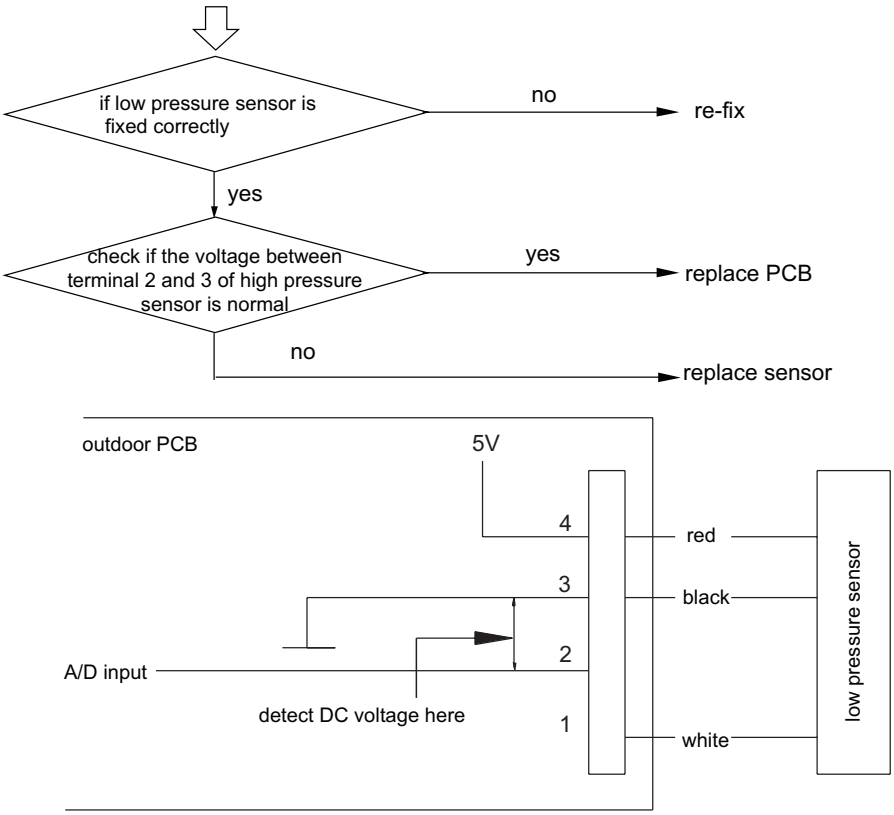

(11) 52: discharging temp. too high of inverter compressor

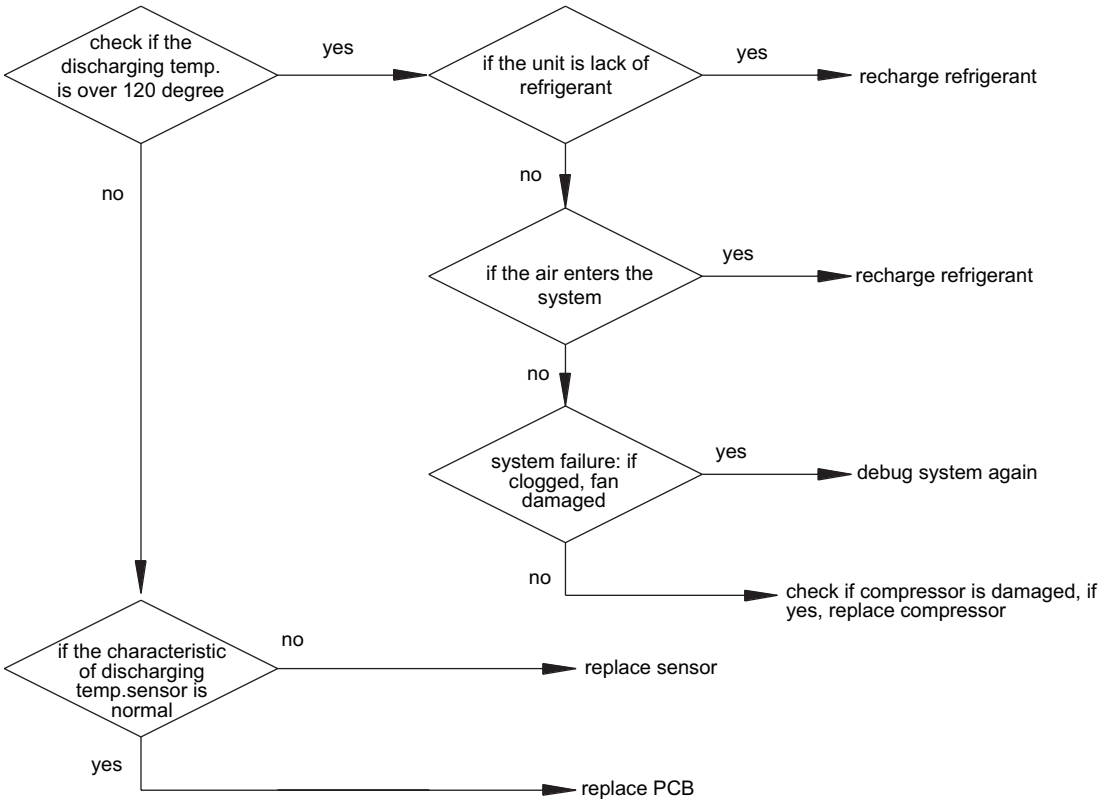

(12) 27: discharging temp.too low of inverter compressor

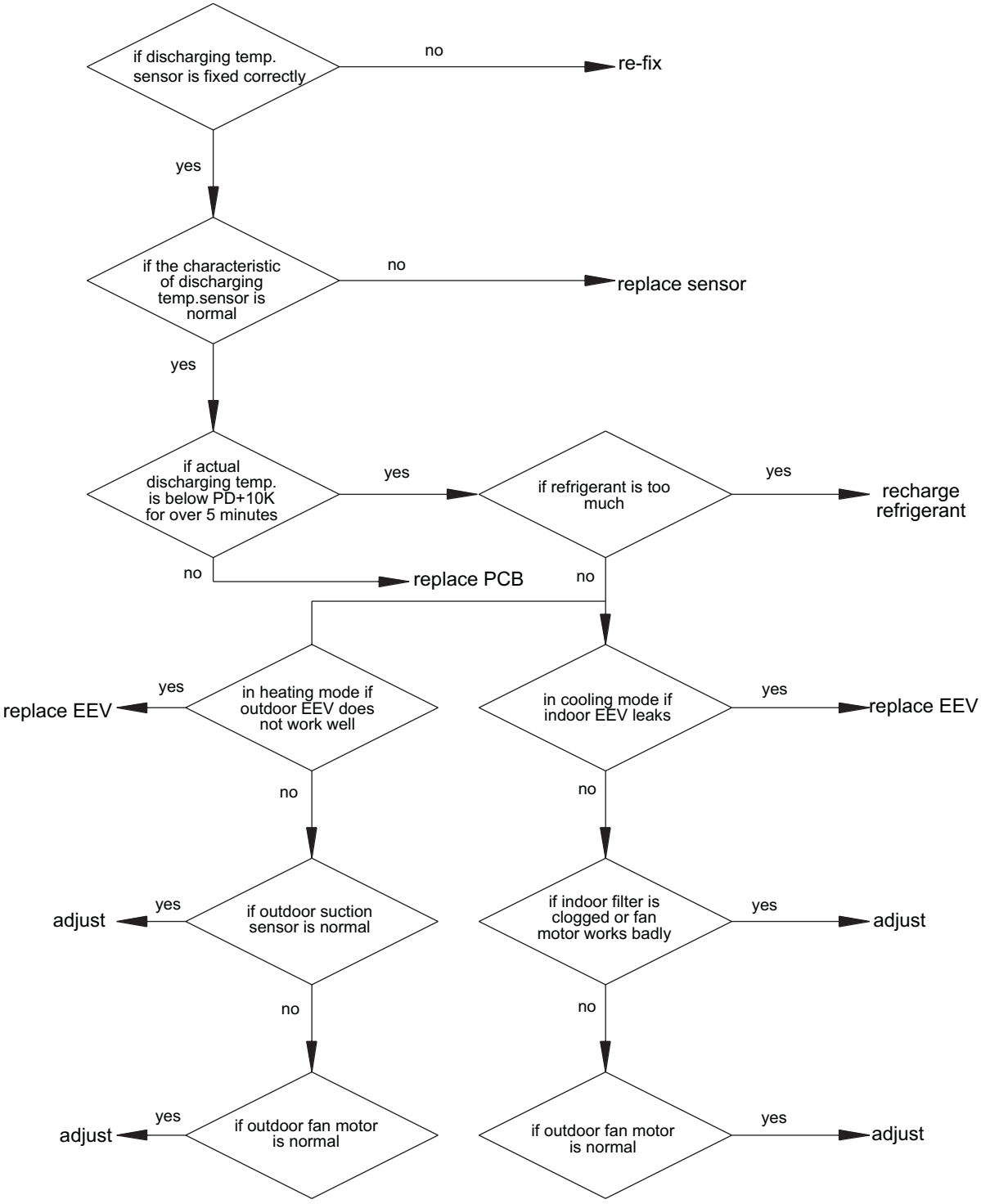

(13) 28: high pressure too high protection

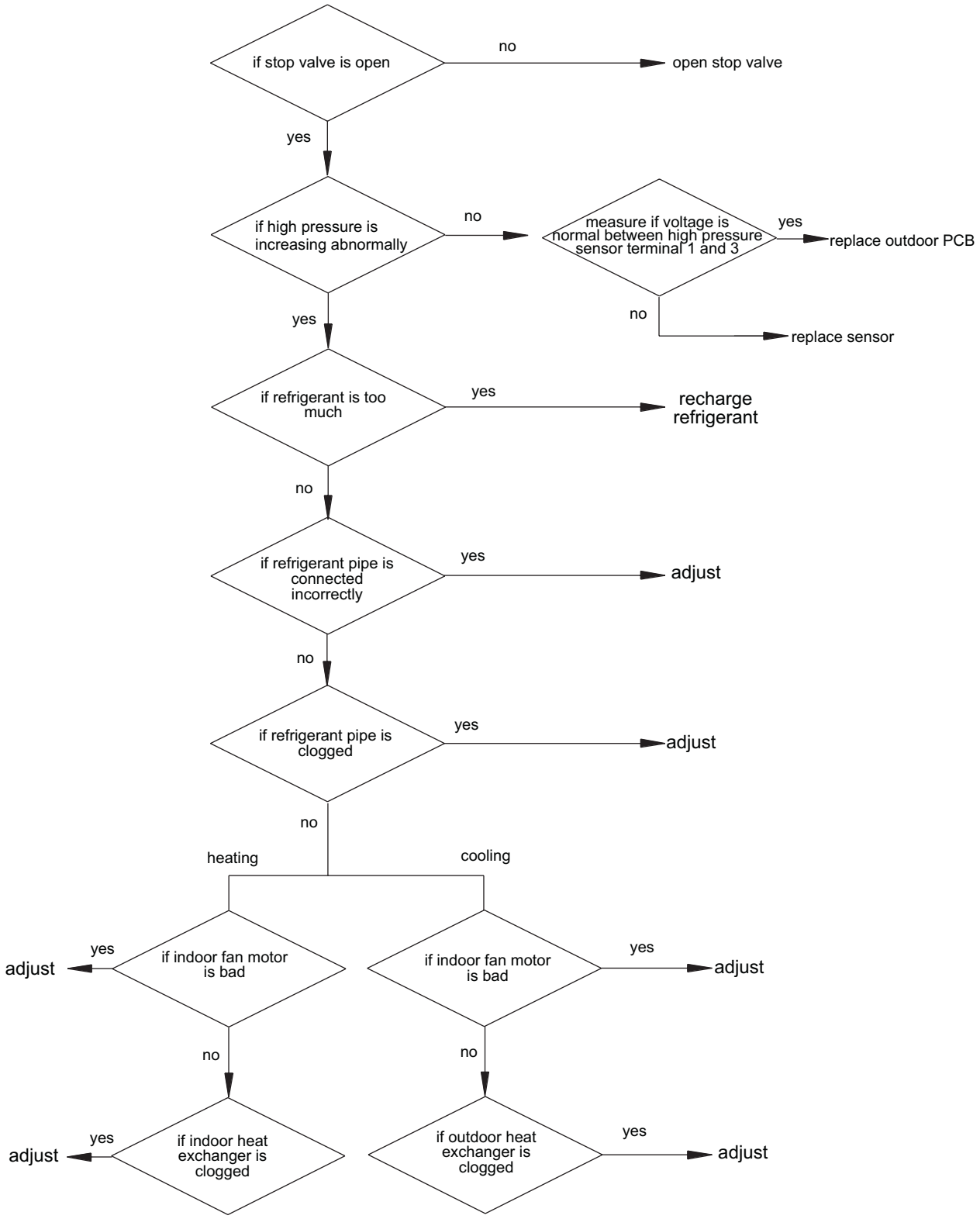

(14) 29: low pressure too low protection

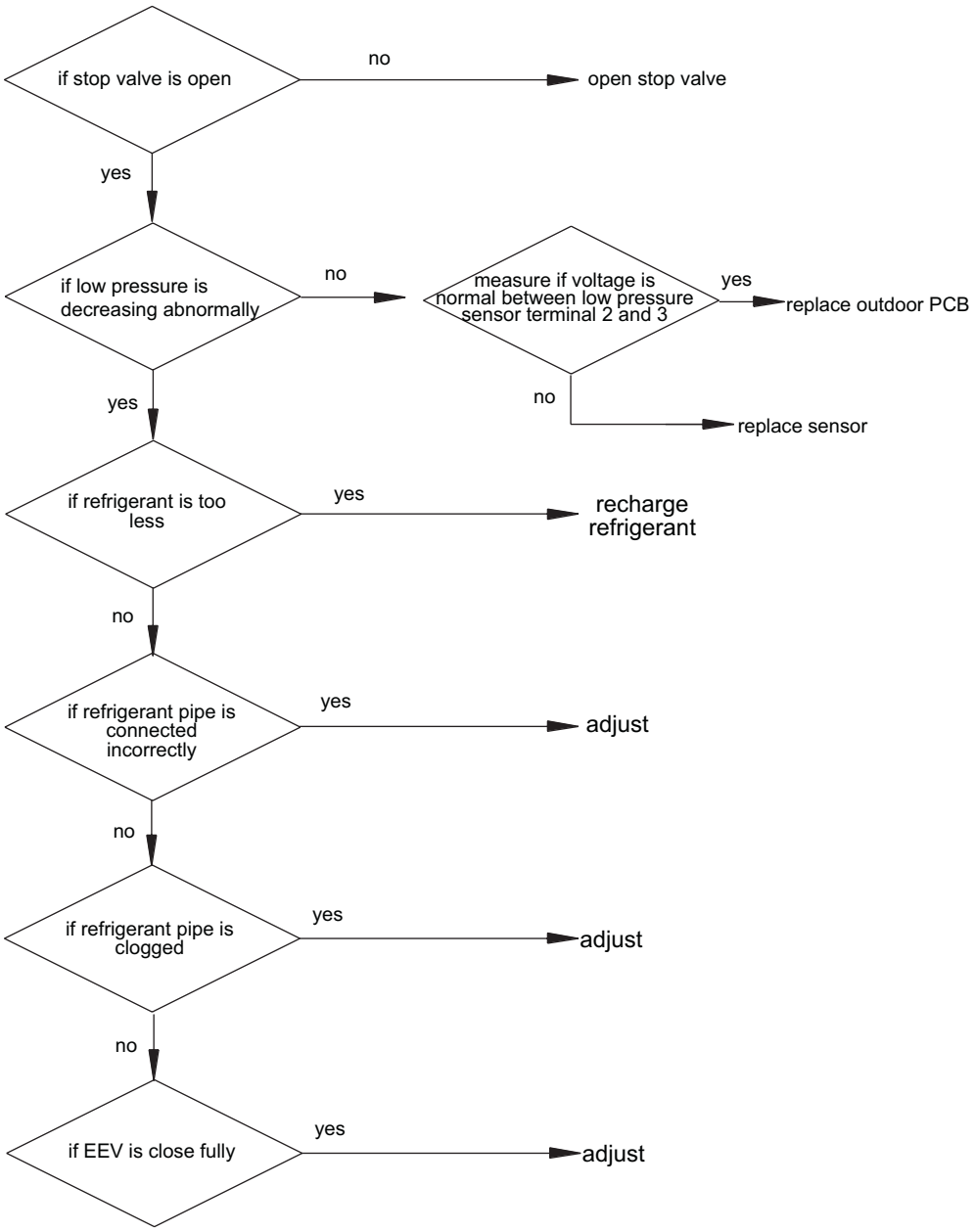

(15) 30: high pressure switch protection

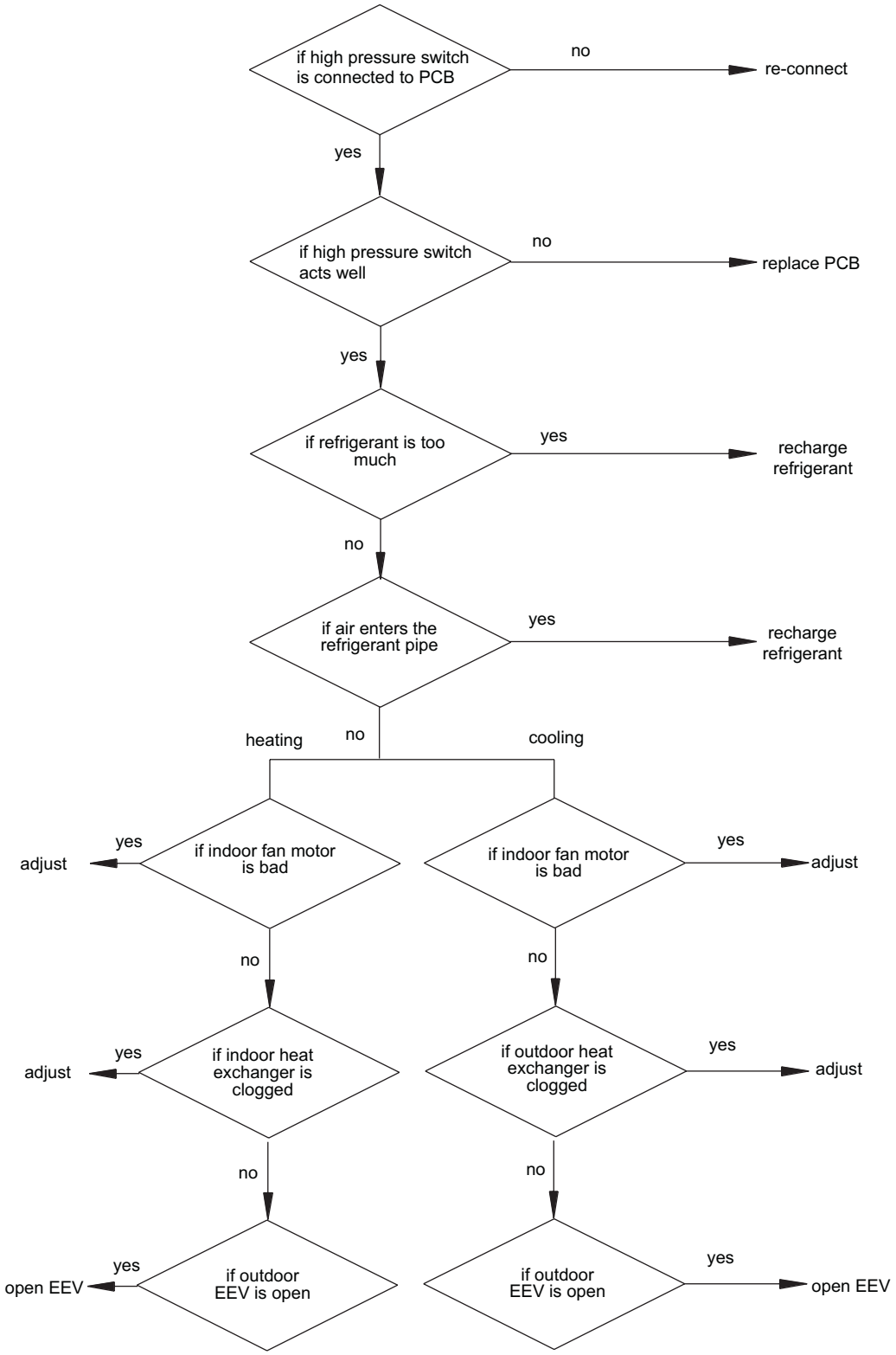

(16) 31: IPM protection

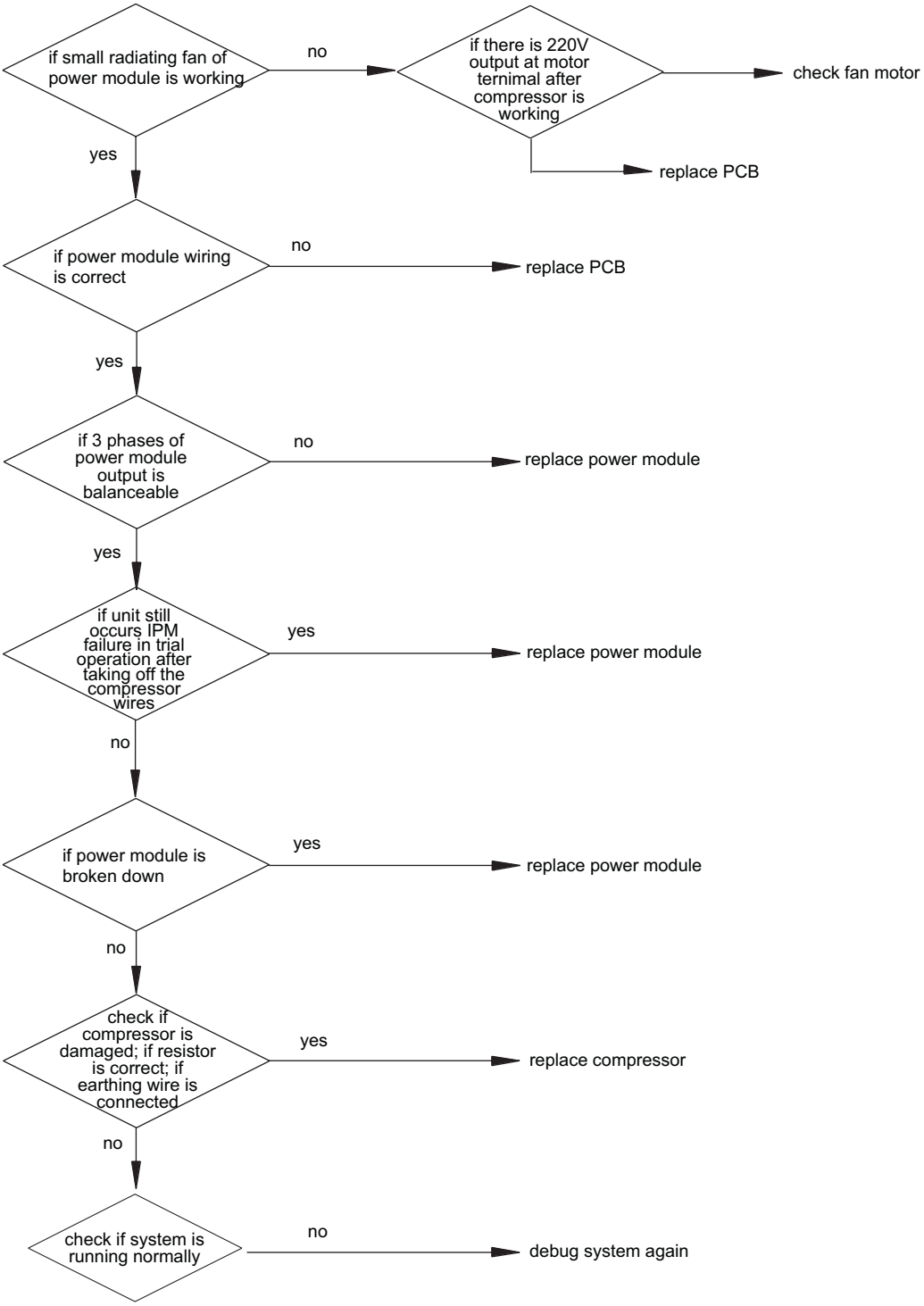

Method to judge if power module is damaged

1. Take off the compressor wire and capacitor wire from power module, and connect P with red terminal of multi meter, measure the resistor among U, V, W. It should be no limitation; then connect black terminal to P, measure the resistor among U, V, W, there should be a value. That shows normal.
2. With the above method to test if the three IGBT between N and U, V, W are normal.
3. Observe if the low voltage board of power module is burnt with the eye.

(17) 32: over current protection of inverter compressor

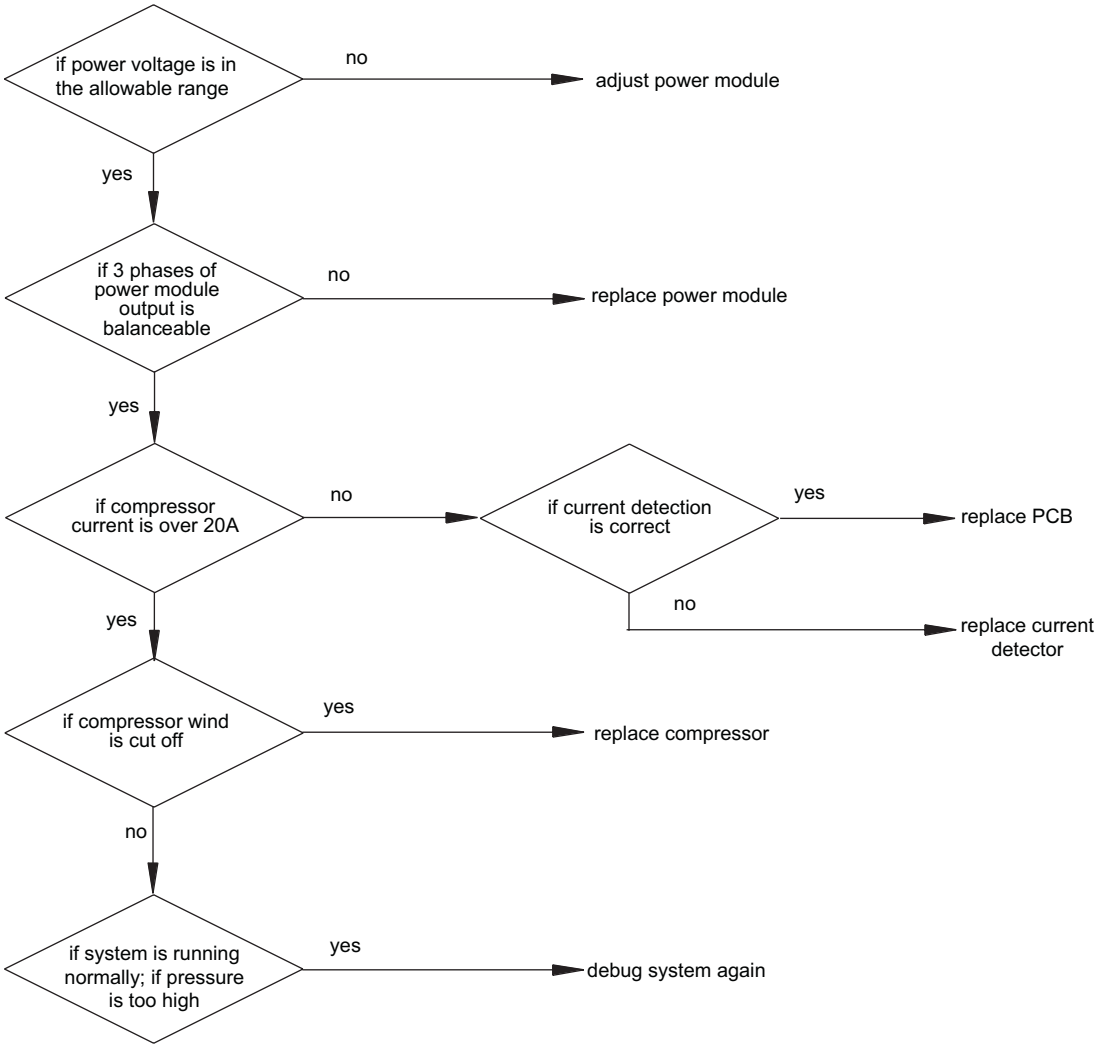

(18) 33: no communication with chip 849 of connecting board

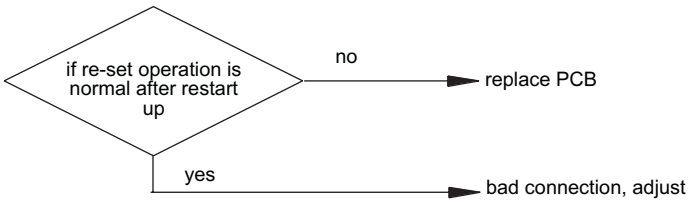

(19) 34: no communication between connecting board and inverter board

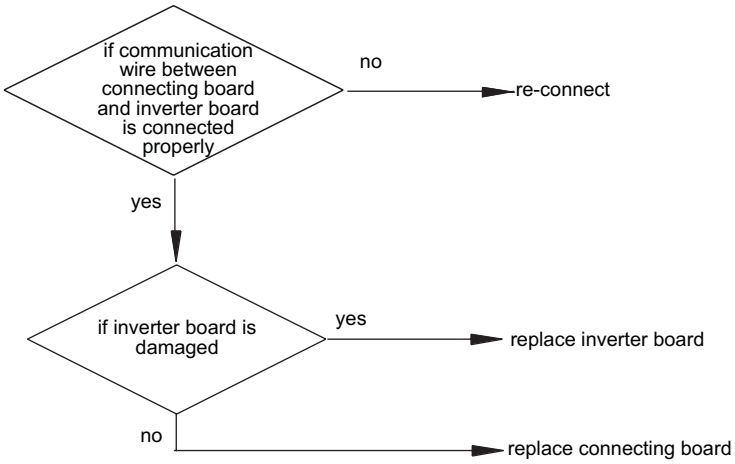

(20) 35: EEPROM failure of connecting board; 36: EEPROM failure of inverter board

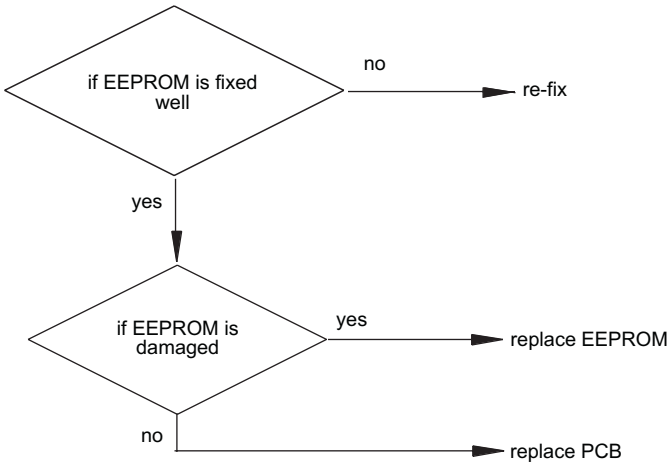

(22) 37: lack of phase or wrong phase sequence

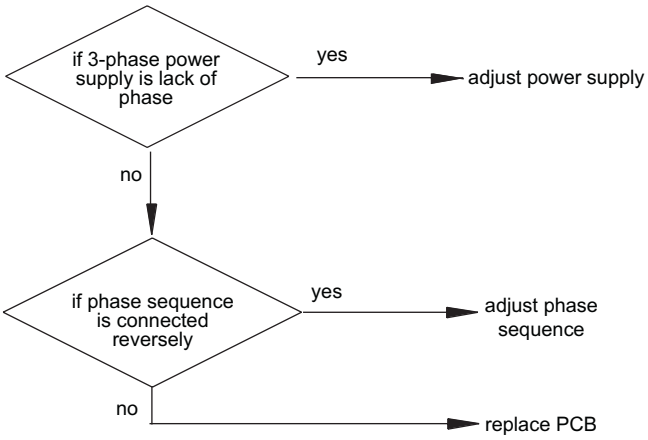

(23) 38: lack of refrigerant

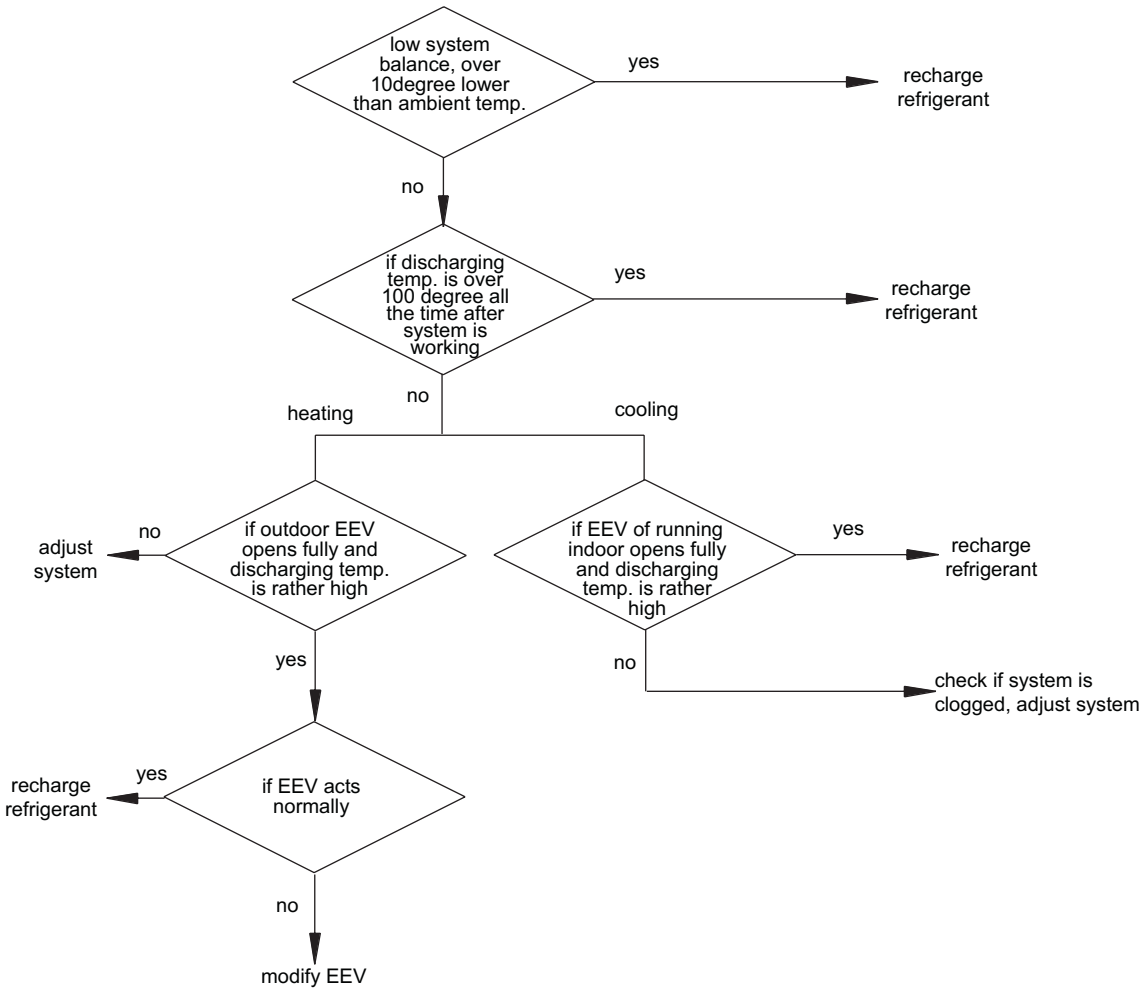

(24) 39: model set by dip switch not matches the actual equipment

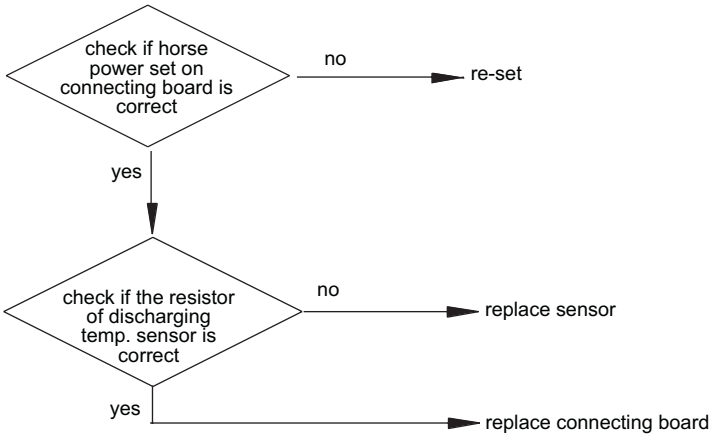

(25) 44: discharging temp. sensor circuit abnormal of fixed frequency compressor1
45: discharging temp. sensor circuit abnormal of fixed frequency compressor2

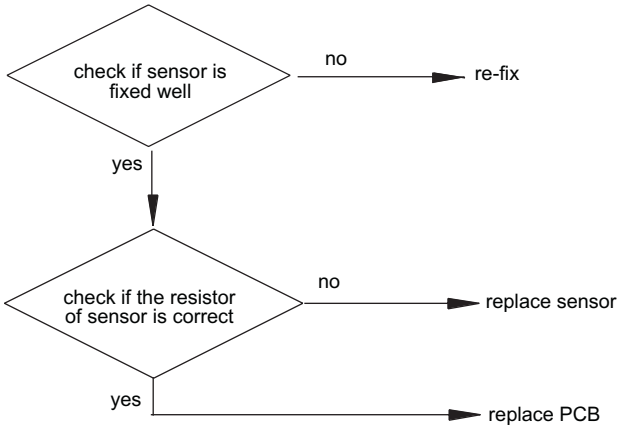

(26) 46: discharging temp. too high protection of fixed frequency compressor1
47: discharging temp. too high protection of fixed frequency compressor2

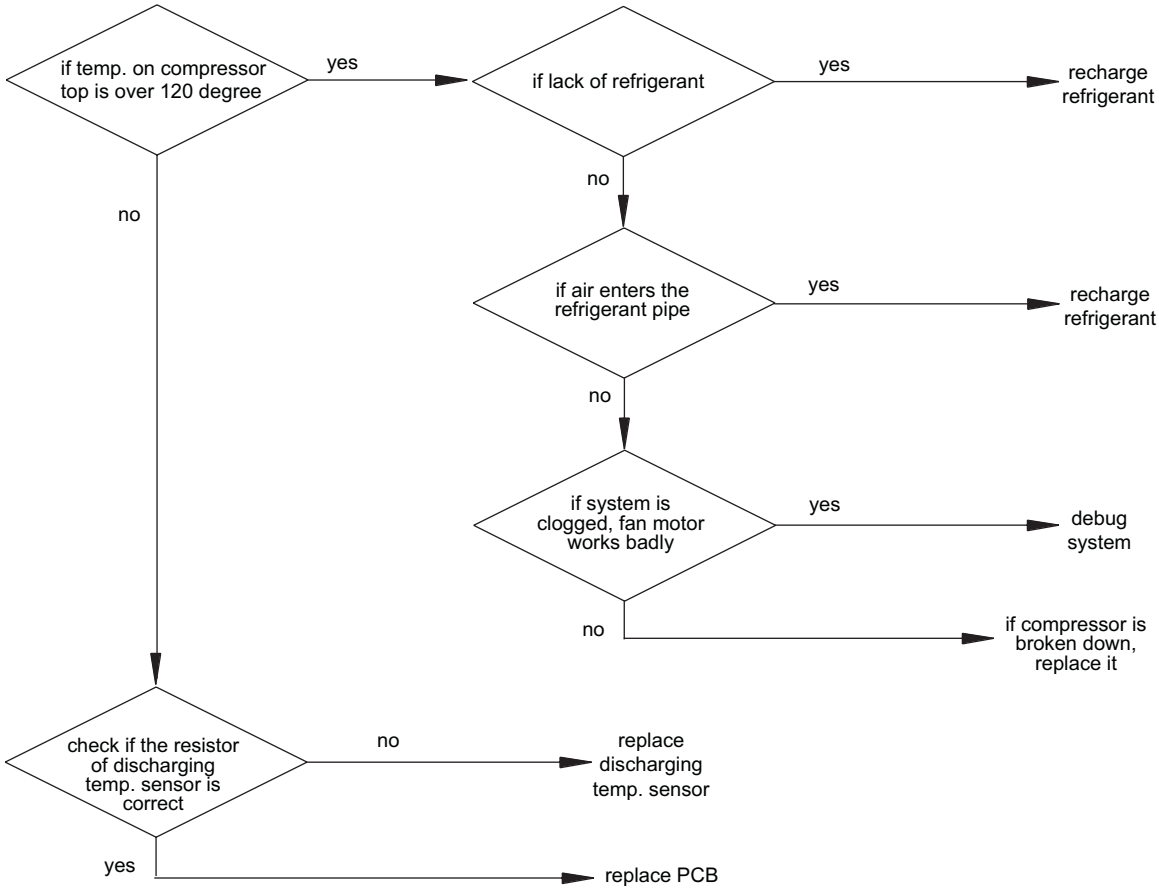

(27) 48: over current protection of fixed frequency compressor1
49: over current protection of fixed frequency compressor2

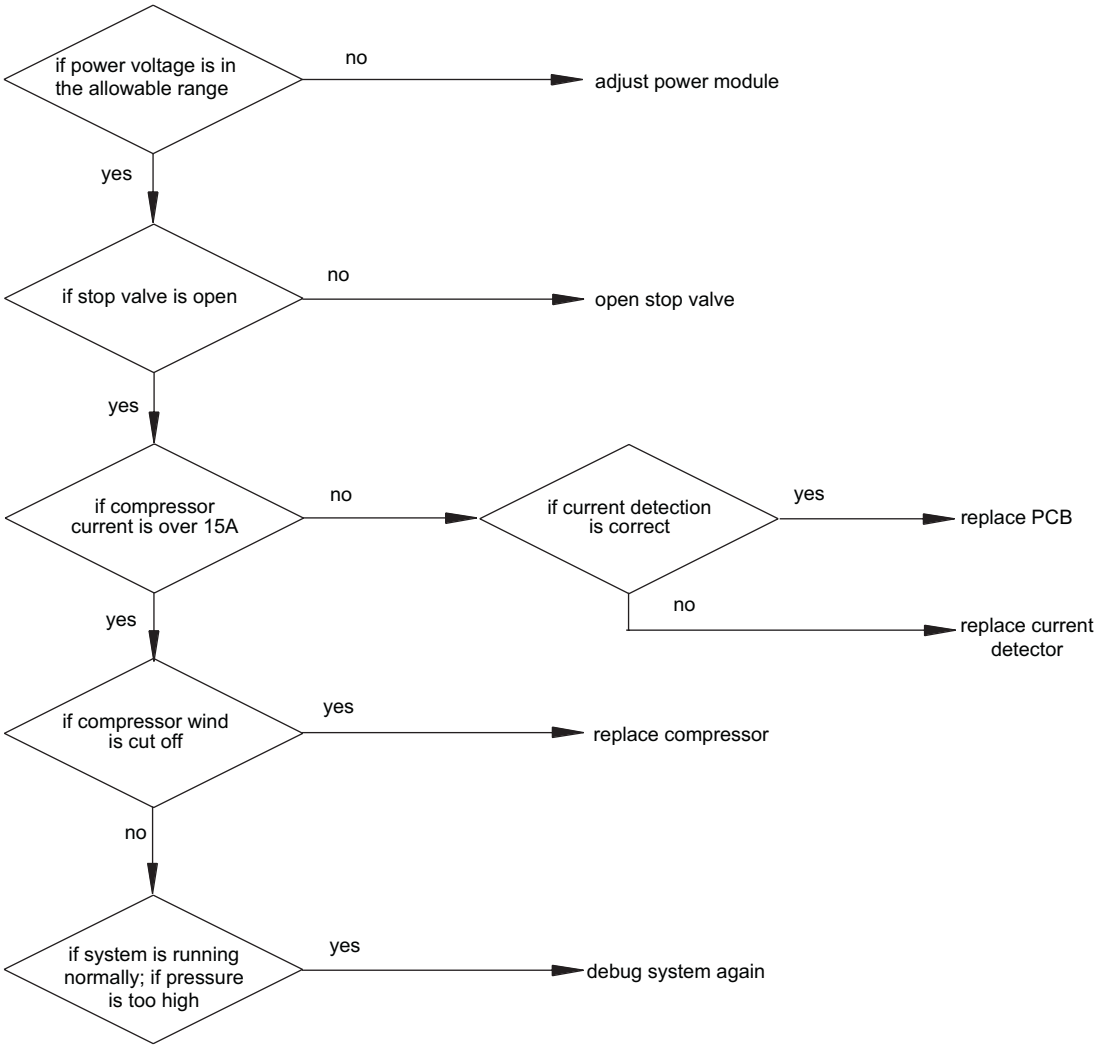

(28) 1001: EEPROM communication failure of connecting board

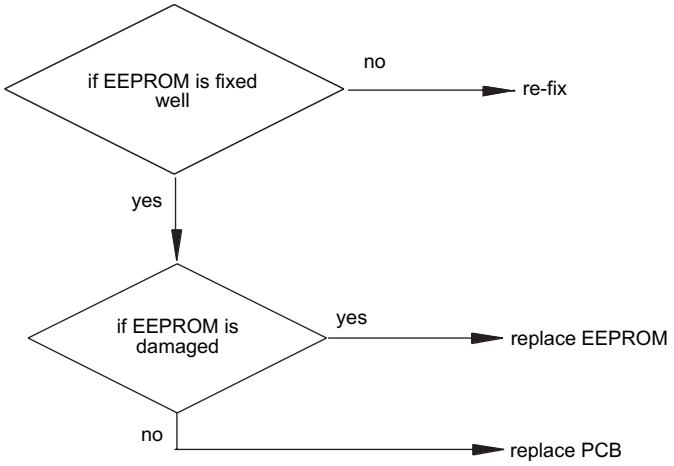

(29) 50: CT in open circuit or short circuit of fixed frequency compressor1
51: CT in open circuit or short circuit of fixed frequency compressor2

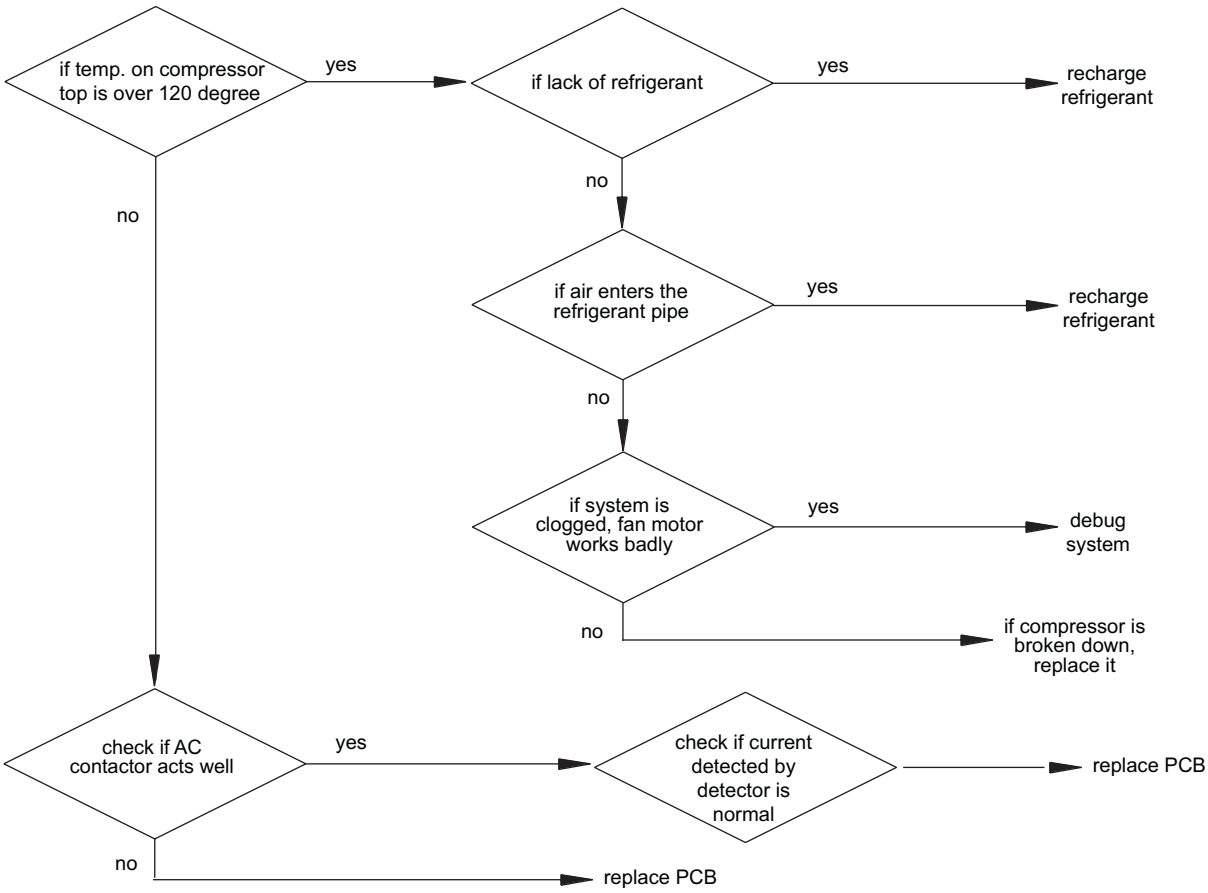

(30) 1003: communication failure with chip 849 on main control board

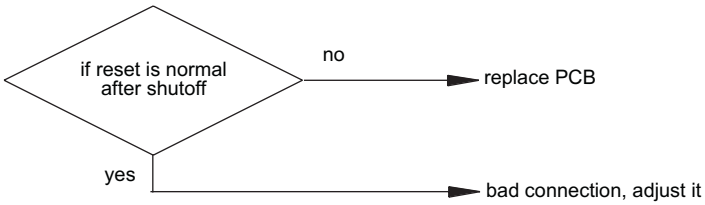

(31) 1002: communication failure between indoor and outdoor

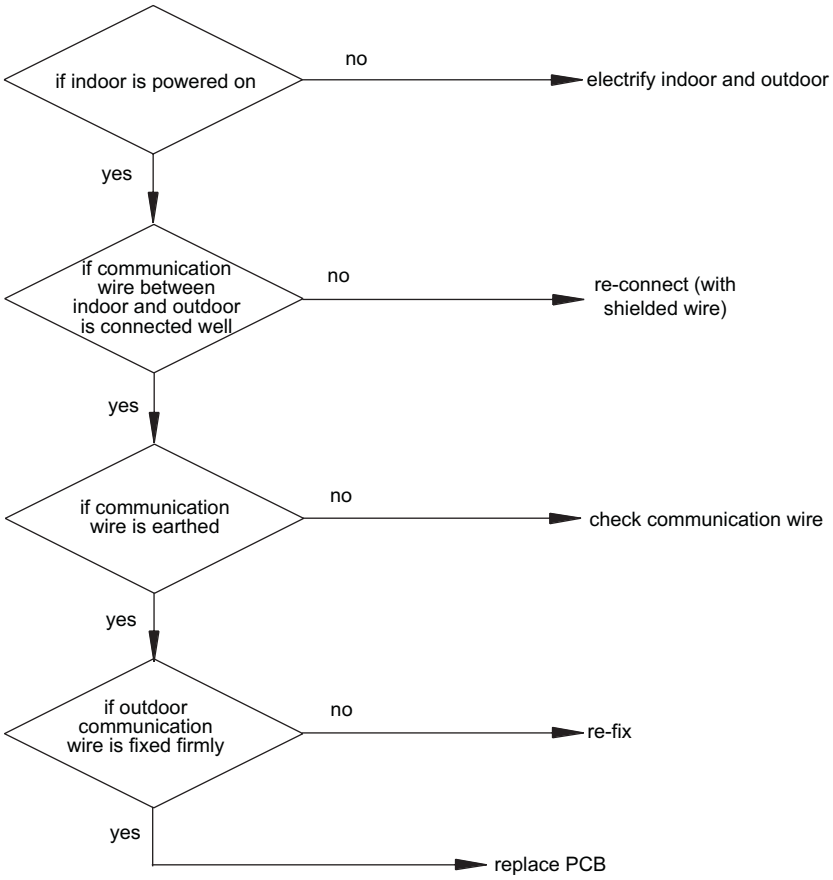

(32) 1005: capacity beyond limitation

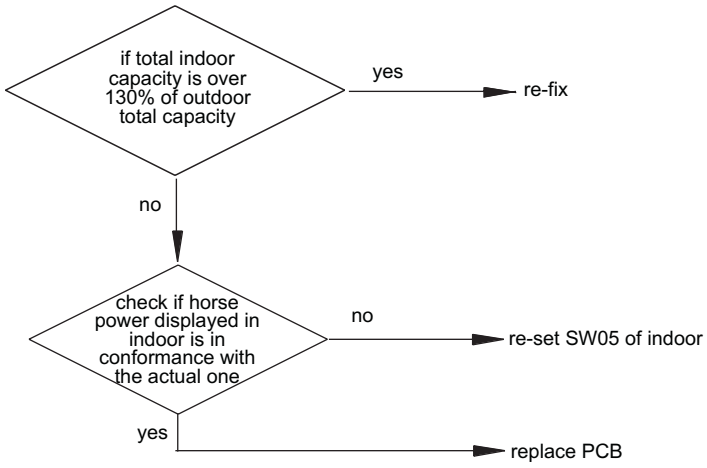

(33) 1004: communication failure with 849 of other modules

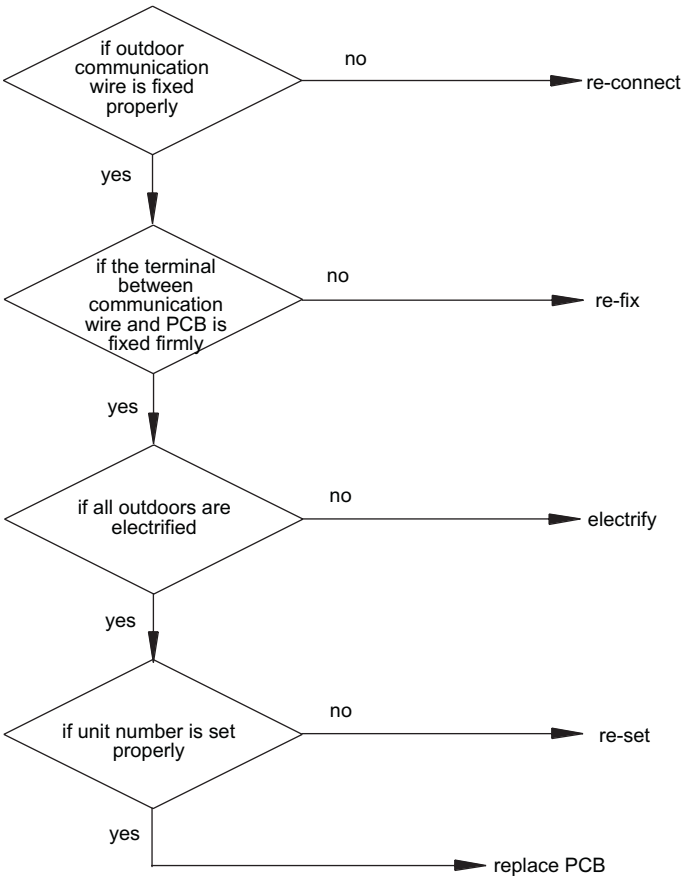

(34) 1006/1007: 4-way valve reversing failure

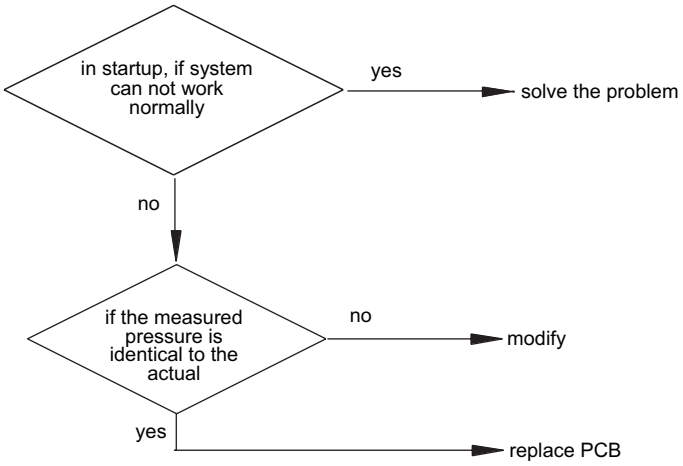

Troubleshooting for wall mounted unit

1. "Communication between wall mounted board A and wired controller failure" and "set modes of wall mounted board A and B conflict" will not occur in fact.

2. wall mounted unit P/G motor failure

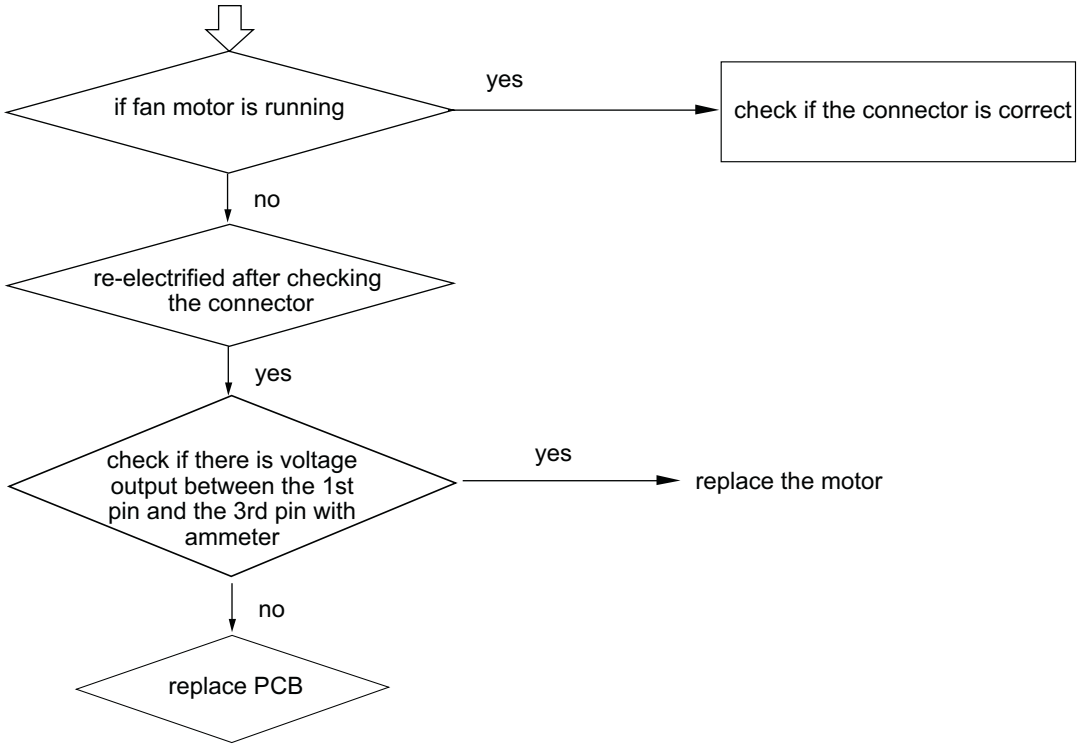

3. EEPROM of wall mounted unit board A failure

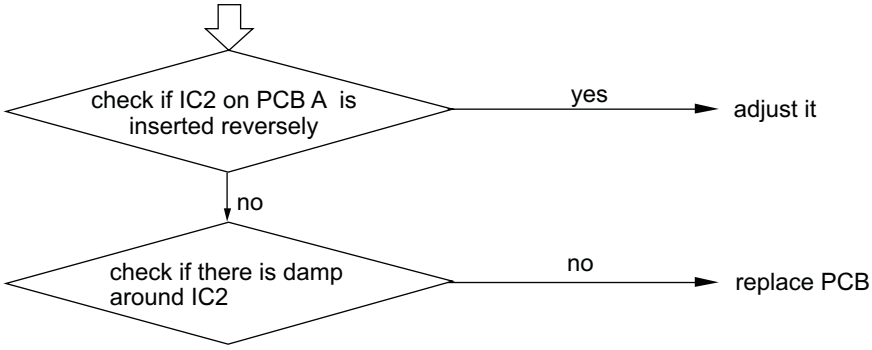

4. serial communication failure between wall mounted board A and B

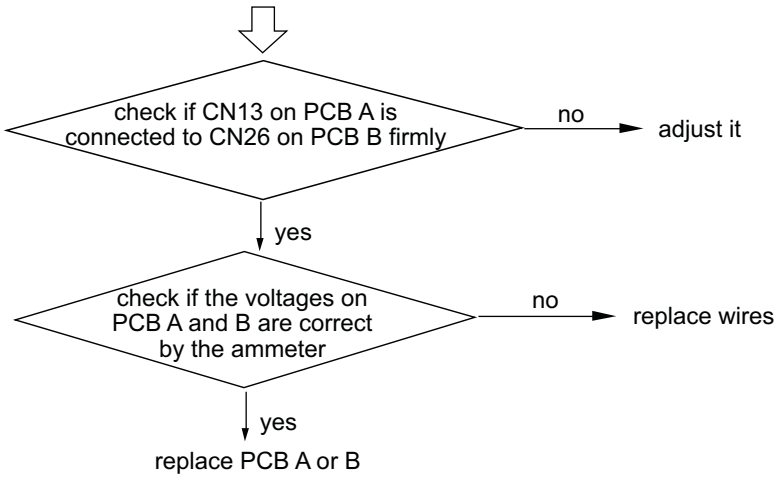

5.3 Sensor characteristic

1. Temp. sensor characteristic

No.	sensor type	characteristic
1	indoor coil/ outdoor suction/ oil temp./ defrost/ ambient temp. sensor	R(25℃)=10KΩ B(25℃/50℃)=3700K
2	wired controller ambient temp./indoor ambient temp. sensor	R(25℃)=23KΩ B(25℃/50℃)=4200K
3	outdoor discharging temp. sensor	R(80℃)=50KΩ B(25℃/80℃)=4450K

Herein, the sensor typical resistor is as follows:

(1) R(25℃)=10KΩ B(25℃/50℃)=3700K

temp. sensor			
temp.(℃)	resistor(KΩ)	temp.(℃)	resistor(KΩ)
- 10	51.8	60	2.660
- 5	39.55	65	2.223
0	30.88	70	1.912
5	24.30	75	1.630
10	19.20	80	1.395
15	15.38	85	1.200
20	12.36	90	1.035
25	10.00	95	0.8967
30	8.141	100	0.7796
35	6.668	105	0.6802
40	5.492	110	0.5955
45	4.549	- 15	66.53
50	3.788	- 20	87.42
55	3.170	−25	116.0

(2) R(25℃)=23KΩ B(25℃/50℃)=4200K

temp. sensor			
temp.(℃)	resistor(KΩ)	temp.(℃)	resistor(KΩ)
- 10	139.5	60	5.243
- 5	105.3	65	4.336
0	80.14	70	3.603
5	61.51	75	3.008
10	47.58	80	2.522
15	35.36	- 20	251.8
20	27.93	- 19	235.9
25	23.00	- 18	223.1
30	18.30	- 17	210.1
35	14.65	- 16	197.9
40	11.79	- 15	186.5
45	9.556	- 14	176.9
50	7.780	- 13	165.9
55	6.371	- 12	156.5

(3) R(80℃)=50KΩ B(25℃/80℃)=4450K

temp. sensor			
temp.(℃)	resistor(KΩ)	temp.(℃)	resistor(KΩ)
15	878.5	85	41.5
20	621.4	90	34.8
25	599.9	95	29.6
30	398.6	100	25.0
40	246.4	105	21.7
50	160.4	110	18.7
60	105.3	115	16.0
70	72.1	120	13.8
75	59.5	125	11.9
80	49.3	130	10.3

2. High pressure sensor

0-9.8kgf/cm² (0-9.8kgf/cm²;0.5-3.5 output)
outdoor voltage of CN27②(W)-③(B)(③(B) connected to ⊖ end of multimeter)

VOUT	Pd	VOUT	Pd	VOUT	Pd	VOUT	Pd	VOUT	Pd
0.500	0.00	1.216	7.01	1.922	13.93	2.625	20.81	3.326	27.68
0.517	0.17	1.234	7.19	1.937	14.07	2.638	20.94	3.340	27.82
0.532	0.31	1.248	7.33	1.950	14.20	2.652	21.08	3.355	27.96
0.546	0.45	1.262	7.46	1.964	14.34	2.667	21.22	3.369	28.10
0.560	0.59	1.276	7.60	1.978	14.48	2.681	21.36	3.382	28.23
0.574	0.72	1.290	7.74	1.993	14.62	2.694	21.49	3.397	28.37
0.588	0.86	1.305	7.88	2.006	14.75	2.708	21.63	3.411	28.51
0.602	1.00	1.318	8.01	2.020	14.89	2.723	21.77	3.425	28.65
0.616	1.14	1.332	8.15	2.035	15.03	2.737	21.91	3.438	28.78
0.630	1.27	1.346	8.29	2.049	15.17	2.750	22.04	3.453	28.92
0.644	1.41	1.361	8.43	2.062	15.30	2.765	22.18	3.467	29.06
0.658	1.55	1.374	8.56	2.076	15.44	2.779	22.32	3.481	29.20
0.673	1.69	1.388	8.70	2.091	15.58	2.793	22.46	3.495	29.33
0.686	1.82	1.403	8.84	2.105	15.72	2.806	22.59	3.509	29.47
0.700	1.96	1.417	8.98	2.118	15.85	2.821	22.73	3.523	29.61
0.714	2.10	1.430	9.11	2.133	15.99	2.835	22.87	3.538	29.75
0.729	2.24	1.444	9.25	2.147	16.13	2.849	23.01	3.551	29.88
0.743	2.38	1.459	9.39	2.161	16.27	2.863	23.14	3.565	30.02
0.756	2.51	1.473	9.53	2.174	16.40	2.877	23.28	3.579	30.16
0.771	2.65	1.486	9.66	2.189	16.54	2.891	23.42	3.594	30.30
0.785	2.79	1.501	9.80	2.203	16.68	2.906	23.56	3.607	30.43
0.812	3.06	1.515	9.94	2.217	16.82	2.919	23.69	3.621	30.57
0.827	3.20	1.529	10.08	2.231	16.95	2.933	23.83	3.636	30.71
0.841	3.34	1.543	10.22	2.245	17.09	2.947	23.97	3.650	30.85
0.855	3.48	1.557	10.35	2.259	17.23	2.962	24.11	3.663	30.98
0.869	3.61	1.571	10.49	2.274	17.37	2.975	24.24	3.677	31.12
0.883	3.75	1.585	10.63	2.287	17.50	2.989	24.38	3.692	31.26
0.897	3.89	1.600	10.77	2.301	17.64	3.004	24.52	3.706	31.40
0.911	4.03	1.613	10.90	2.315	17.78	3.018	24.66	3.719	31.53
0.925	4.16	1.627	11.04	2.330	17.92	3.031	24.79	3.734	31.67
0.939	4.30	1.642	11.18	2.344	18.06	3.045	24.93	3.748	31.81
0.953	4.44	1.656	11.32	2.357	18.19	3.060	25.07	3.762	31.95
0.968	4.58	1.669	11.45	2.372	18.33	3.074	25.21	3.776	32.09
0.981	4.71	1.683	11.59	2.386	18.47	3.087	25.34	3.791	32.23
0.995	4.85	1.698	11.73	2.400	18.61	3.102	25.48	3.805	32.37
1.009	4.99	1.712	11.87	2.413	18.74	3.116	25.62	3.819	32.51
1.024	5.13	1.725	12.00	2.428	18.88	3.130	25.76	3.834	32.65
1.037	5.26	1.740	12.14	2.442	19.02	3.144	25.90	3.848	32.79
1.051	5.40	1.754	12.28	2.456	19.16	3.158	26.03	3.862	32.93
1.066	5.54	1.768	12.42	2.470	19.29	3.172	26.17	3.877	33.07
1.077	5.65	1.781	12.55	2.484	19.43	3.186	26.31	3.891	33.21
1.093	5.81	1.796	12.69	2.498	19.57	3.201	26.45	3.900	33.30
1.108	5.95	1.810	12.83	2.512	19.71	3.214	26.58		
1.122	6.09	1.824	12.97	2.526	19.84	3.228	26.72		
1.136	6.23	1.838	13.10	2.540	19.98	3.242	26.86		
1.149	6.36	1.852	13.24	2.554	20.12	3.257	27.00		
1.164	6.50	1.866	13.38	2.569	20.26	3.270	27.13		
1.178	6.64	1.880	13.52	2.582	20.39	3.284	27.27		
1.192	6.78	1.894	13.65	2.596	20.53	3.299	27.41		
1.206	6.91	1.908	13.79	2.610	20.67	3.313	27.55		

3. Low pressure sensor

0-9.8kgf/cm² (0-9.8kgf/cm²;0.5-3.5 output)
outdoor voltage of CN27②(W)-③(B)(③(B) connected to ⊖ end of multimeter)

VOUT	Ps	VOUT	Ps	VOUT	Ps	VOUT	Ps	VOUT	Ps
0.500	0.00	1.204	2.30	1.908	4.60	2.609	6.89	3.310	9.18
0.503	0.01	1.219	2.35	1.920	4.64	2.624	6.94	3.326	9.23
0.518	0.06	1.238	2.41	1.936	4.69	2.637	6.98	3.338	9.27
0.531	0.10	1.247	2.44	1.948	4.73	2.652	7.03	3.353	9.32
0.546	0.15	1.262	2.49	1.963	4.78	2.664	7.07	3.368	9.37
0.561	0.20	1.274	2.53	1.979	4.83	2.680	7.12	3.381	9.41
0.573	0.24	1.290	2.58	1.991	4.87	2.692	7.16	3.396	9.46
0.589	0.29	1.305	2.63	2.006	4.92	2.707	7.21	3.408	9.50
0.601	0.33	1.317	2.67	2.018	4.96	2.722	7.26	3.423	9.55
0.616	0.38	1.333	2.72	2.034	5.01	2.735	7.30	3.436	9.59
0.629	0.42	1.345	2.76	2.049	5.06	2.750	7.35	3.451	9.64
0.644	0.47	1.360	2.81	2.061	5.10	2.762	7.39	3.466	9.69
0.659	0.52	1.372	2.85	2.077	5.15	2.778	7.44	3.479	9.73
0.671	0.56	1.388	2.9	2.089	5.19	2.793	7.49	3.494	9.78
0.687	0.61	1.403	2.95	2.104	5.24	2.805	7.53	3.500	9.80
0.699	0.65	1.415	2.99	2.116	5.28	2.820	7.58		
0.714	0.70	1.431	3.04	2.132	5.33	2.833	7.62		
0.730	0.75	1.443	3.08	2.147	5.38	2.848	7.67		
0.742	0.79	1.458	3.13	2.159	5.42	2.860	7.71		
0.757	0.84	1.473	3.18	2.174	5.47	2.876	7.76		
0.769	0.88	1.486	3.22	2.187	5.51	2.891	7.81		
0.785	0.93	1.501	3.27	2.202	5.56	2.903	7.85		
0.812	1.02	1.513	3.31	2.217	5.61	2.918	7.90		
0.828	1.07	1.529	3.36	2.230	5.65	2.931	7.94		
0.840	1.11	1.544	3.41	2.245	5.70	2.946	7.99		
0.855	1.16	1.556	3.45	2.257	5.74	2.961	8.04		
0.867	1.20	1.571	3.5	2.272	5.79	2.973	8.08		
0.883	1.25	1.584	3.54	2.285	5.83	2.989	8.13		
0.898	1.30	1.599	3.59	2.300	5.88	3.001	8.17		
0.910	1.34	1.611	3.63	2.315	5.93	3.016	8.22		
0.926	1.39	1.627	3.68	2.328	5.97	3.029	8.26		
0.938	1.43	1.642	3.73	2.343	6.02	3.044	8.31		
0.950	1.47	1.654	3.77	2.355	6.06	3.059	8.36		
0.953	1.48	1.669	3.82	2.370	6.11	3.071	8.40		
0.968	1.53	1.682	3.86	2.386	6.16	3.087	8.45		
0.981	1.57	1.697	3.91	2.398	6.20	3.099	8.49		
0.996	1.62	1.712	3.96	2.413	6.25	3.114	8.54		
1.008	1.66	1.724	4.00	2.426	6.29	3.13	8.59		
1.023	1.71	1.74	4.05	2.441	6.34	3.142	8.63		
1.051	1.80	1.752	4.09	2.456	6.39	3.157	8.68		
1.066	1.85	1.767	4.14	2.468	6.43	3.169	8.72		
1.079	1.89	1.78	4.18	2.484	6.48	3.185	8.77		
1.094	1.94	1.795	4.23	2.496	6.52	3.20	8.82		
1.106	1.98	1.81	4.28	2.511	6.57	3.212	8.86		
1.121	2.03	1.822	4.32	2.523	6.61	3.228	8.91		
1.137	2.08	1.838	4.37	2.539	6.66	3.24	8.95		
1.149	2.12	1.85	4.41	2.554	6.71	3.255	9.00		
1.164	2.17	1.865	4.46	2.566	6.75	3.267	9.04		
1.177	2.21	1.881	4.51	2.582	6.80	3.283	9.09		
1.192	2.26	1.893	4.55	2.594	6.84	3.298	9.14		

APPENDIX

1. Saturated R22 thermodynamic characteristic

t ℃	p bar	v' dm³/kg	v″ dm³/kg	ρ' kg/dm³	ρ″ kg/dm³	h kJ/kg	h″ kJ/kg	t kJ/kg	s' kJ/kgK	s″ kJ/kgK
-60	0.38	0.683	537.90	1.464	1.860	132.40	378.06	245.66	0.7227	1.8752
-59	0.40	0.684	510.19	1.461	1.960	133.45	378.56	245.11	0.7276	1.8722
-58	0.42	0.686	484.18	1.458	2.070	134.51	379.06	244.56	0.7326	1.8692
-57	0.45	0.687	459.75	1.456	2.180	135.57	379.57	244.00	0.7375	1.8663
-56	0.47	0.688	436.79	1.453	2.290	136.63	380.07	243.43	0.7424	1.8634
-55	0.50	0.690	415.19	1.450	2.410	137.70	380.57	242.87	0.7473	1.8606
-54	0.52	0.691	394.87	1.447	2.530	138.77	381.07	242.29	0.7522	1.8578
-53	0.55	0.692	375.73	1.445	2.660	139.84	381.56	241.72	0.7570	1.8550
-52	0.56	0.694	367.71	1.442	2.800	140.92	382.06	241.14	0.7019	1.8523
-51	0.61	0.695	340.72	1.439	2.940	142.00	382.56	240.55	0.7668	1.8496
-50	0.65	0.696	324.69	1.436	3.08	143.08	383.05	239.97	0.7716	1.8470
-49	0.68	0.698	309.57	1.433	3.23	144.17	383.54	239.37	0.7765	1.8444
-48	0.72	0.699	295.29	1.431	3.39	145.26	384.03	238.78	0.7813	1.8418
-47	0.75	0.700	281.00	1.428	3.55	146.25	384.52	238.17	0.7861	1.8493
-46	0.79	0.702	269.05	1.425	3.72	147.44	385.01	237.67	0.7909	1.8366
-45	0.83	0.703	257.24	1.422	3.89	148.34	385.52	237.18	0.7949	1.8344
-44	0.87	0.705	245.82	1.419	4.07	149.44	386.00	236.57	0.7997	1.8320
-43	0.91	0.706	235.01	1.416	4.26	150.54	386.49	235.95	0.8044	1.8296
-42	0.96	0.707	224.78	1.414	4.45	151.65	386.97	235.32	0.8092	1.8273
-41	1.01	0.709	215.08	1.411	4.65	152.75	387.45	234.7	0.8140	1.8250
-40	1.05	0.710	205.88	1.408	4.86	153.86	307.93	234.07	0.8187	1.8227
-39	1.10	0.712	197.17	1.405	5.07	154.97	386.40	233.43	0.8235	1.8204
-38	1.15	0.713	188.89	1.402	5.29	156.09	388.88	232.79	0.8282	1.8182
-37	1.21	0.715	181.04	1.399	5.52	157.21	389.35	232.15	0.8329	1.8160
-36	1.26	0.716	173.58	1.396	5.76	158.32	389.82	231.50	0.8376	1.8138
-35	1.32	0.718	166.54	1.393	6.00	159.38	390.30	230.92	0.8421	1.8117
-34	1.38	0.719	159.80	1.390	6.26	160.50	390.76	230.26	0.8468	1.8096
-33	1.44	0.721	153.39	1.387	6.52	161.63	391.23	229.60	0.8514	1.8075
-32	1.51	0.722	147.29	1.385	6.79	162.75	391.69	228.94	0.8561	1.8054
-31	1.57	0.724	141.49	1.382	7.07	163.88	392.15	228.27	0.8607	1.8034
-30	1.64	0.725	135.96	1.379	7.36	165.01	392.61	227.59	0.8654	1.8014
-29	1.71	0.727	130.69	1.376	7.65	166.14	393.06	226.92	0.8700	1.7994
-28	1.78	0.728	125.68	1.373	7.96	167.28	393.51	226.24	0.8746	1.7975
-27	1.86	0.730	120.89	1.370	8.27	168.41	393.96	225.55	0.8792	1.7955
-26	1.94	0.732	116.33	1.367	8.60	169.55	394.41	224.88	0.8388	1.7936
-25	2.02	0.733	111.97	1.364	8.93	170.69	394.85	224.17	0.8884	1.7917
-24	2.10	0.735	107.82	1.361	9.28	171.82	395.30	223.47	0.8929	1.7890
-23	2.18	0.737	103.85	1.358	9.63	172.96	395.74	222.77	0.8975	1.7880
-22	2.27	0.738	100.06	1.355	9.99	174.11	396.17	222.07	0.9020	1.7862
-21	2.36	0.740	96.40	1.352	10.37	175.31	396.60	221.29	0.9067	1.7843
-20	2.45	0.742	92.94	1.348	10.76	176.46	397.03	220.57	0.9112	1.7826
-19	2.55	0.743	89.63	1.345	11.16	177.60	397.46	219.86	0.9157	1.7808
-18	2.65	0.745	86.46	1.342	11.57	178.75	397.88	219.13	0.9202	1.7791
-17	2.75	0.747	83.43	1.339	11.99	179.90	398.30	218.41	0.9247	1.7773
-16	2.86	0.748	80.53	1.336	12.42	181.04	398.72	217.68	0.9291	1.7756
-15	2.96	0.750	77.72	1.333	12.87	182.25	399.13	216.88	0.9338	1.7739
-14	3.07	0.752	75.06	1.330	13.32	183.40	399.54	216.14	0.9382	1.7722
-13	3.19	0.754	72.49	1.327	13.8	184.62	399.94	215.33	0.9428	1.7705
-12	3.30	0.756	70.04	1.324	14.28	185.77	400.35	214.58	0.9472	1.7689
-11	3.42	0.757	67.70	1.320	14.77	186.92	400.75	213.83	0.9516	1.7673
-10	3.55	0.759	65.43	1.317	15.28	188.13	401.14	213.01	0.9562	1.7656
-9	3.68	0.761	63.27	1.314	16.81	189.29	401.54	212.25	0.9605	1.764
-8	3.81	0.763	61.18	1.311	16.35	190.50	401.93	211.42	0.9651	1.7624
-7	3.94	0.765	59.59	1.308	16.90	191.66	402.31	210.66	0.9694	1.7609
-6	4.08	0.767	57.26	1.304	17.46	192.87	402.69	209.82	0.9739	1.7593
-5	4.22	0.769	55.42	1.301	18.04	194.03	403.07	209.04	0.9782	1.7577
-4	4.36	0.711	53.64	1.298	18.64	195.25	403.44	208.20	0.9827	1.7562
-3	4.51	0.772	51.95	1.295	19.25	196.41	403.82	207.41	0.9869	1.7547
-2	4.66	0.774	50.30	1.291	19.88	197.62	404.18	206.56	0.9914	1.7531
-1	4.82	0.776	48.73	1.288	20.52	198.80	404.54	205.74	0.9957	1.7517
0	4.98	0.778	47.21	1.285	21.18	200.00	404.90	204.90	1.0000	1.7502
1	5.14	0.781	45.74	1.281	21.86	201.22	405.25	240.03	1.0044	1.7487
2	5.31	0.783	44.35	1.278	22.55	202.38	405.61	203.23	1.0086	1.7472
3	5.48	0.785	42.99	1.274	23.26	203.60	405.95	202.35	1.0130	1.7457
4	5.66	0.787	41.69	1.271	23.99	204.78	406.30	201.51	1.0172	1.7443
5	5.84	0.789	40.42	1.268	24.74	206.00	406.63	200.63	1.0215	1.7428
6	6.02	0.791	39.21	1.264	25.5	207.20	406.96	199.76	1.0258	1.7414
7	6.21	0.793	38.04	1.261	26.29	208.43	407.29	198.86	1.0301	1.7400
8	6.40	0.795	36.92	1.257	27.09	209.61	407.62	198.01	1.0343	1.7385
9	6.60	0.791	35.83	1.254	27.91	210.81	407.94	197.12	1.0385	1.7371
10	6.80	0.800	34.78	1.250	28.76	212.04	408.25	196.21	1.0428	1.7357
11	7.01	0.802	33.76	1.247	29.62	213.26	408.56	195.30	1.0470	1.7343
12	7.22	0.804	32.79	1.243	30.50	214.45	408.86	194.42	1.0511	1.7329
13	7.43	0.807	31.84	1.240	31.41	215.67	409.16	193.49	1.0554	1.7315
14	7.65	0.809	30.93	1.236	32.33	216.88	409.46	192.58	1.0595	1.7302
15	7.88	0.811	30.04	1.232	33.28	218.10	409.75	191.85	1.0637	1.7288
16	8.11	0.814	29.19	1.229	34.26	219.33	410.03	190.70	1.0679	1.7274
17	8.34	0.816	28.37	1.225	35.25	220.54	410.31	189.78	1.0720	1.7261
18	8.58	0.819	27.57	1.221	36.27	221.75	410.59	188.84	1.0761	1.7247
19	8.83	0.821	26.80	1.218	37.31	222.98	410.86	187.88	1.0802	1.7233
20	9.08	0.824	26.06	1.214	38.38	224.19	411.13	186.94	1.0643	1.7220
21	9.33	0.826	25.33	1.210	39.47	225.42	411.39	185.96	1.0884	1.7206
22	9.59	0.829	24.63	1.206	40.59	226.65	411.64	184.99	1.0925	1.7193
23	9.86	0.832	23.96	1.203	41.74	227.87	411.89	184.02	1.0966	1.7179
24	10.13	0.834	23.31	1.199	42.91	229.10	412.13	183.03	1.1007	1.7166
25	10.41	0.837	22.67	1.195	44.11	230.34	412.37	182.03	1.1047	1.7153
26	10.69	0.840	22.06	1.191	45.33	231.56	412.60	181.04	1.1087	1.7139
27	10.98	0.842	21.46	1.187	46.59	232.79	412.83	180.03	1.1128	1.7126
28	11.27	0.845	20.89	1.183	47.88	234.03	413.04	179.01	1.1168	1.7112
29	11.57	0.848	20.33	1.179	49.2	235.27	413.26	177.98	1.1208	1.7099
30	11.88	0.851	19.79	1.175	50.54	236.50	413.47	176.97	1.1248	1.7086
31	12.19	0.854	19.26	1.171	51.92	237.74	413.67	175.93	1.1288	1.7072
32	12.51	0.857	18.76	1.167	53.33	238.99	413.86	174.87	1.1328	1.7059
33	12.83	0.860	18.25	1.163	54.78	240.23	414.05	173.82	1.1366	1.7045
34	13.16	0.863	17.77	1.159	56.26	241.48	414.23	172.75	1.1408	1.7032
35	13.49	0.866	17.31	1.155	57.78	242.73	414.40	171.07	1.1447	1.7018
36	13.84	0.869	16.86	1.150	59.33	243.98	414.57	170.59	1.1487	1.7005
37	14.18	0.873	16.42	1.146	60.92	245.23	414.73	169.50	1.1526	1.6991
38	14.54	0.876	15.99	1.142	62.54	246.49	414.88	168.39	1.1566	1.6978
39	14.90	0.879	15.57	1.137	64.21	247.75	415.03	167.28	1.1605	1.6964
40	15.27	0.883	15.17	1.133	65.91	249.01	415.17	166.16	1.1644	1.6951
41	15.64	0.886	14.78	1.129	67.66	250.17	415.30	165.02	1.1684	1.6937
42	16.02	0.890	14.40	1.124	69.45	251.55	415.42	163.87	1.1723	1.6923
43	16.41	0.893	14.03	1.120	71.28	252.82	415.53	162.72	1.1762	1.6909
44	16.81	0.897	3.670	1.115	73.16	254.10	415.83	161.54	1.1802	1.6895
45	17.21	0.901	3.320	1.110	75.08	255.38	415.73	160.36	1.1841	1.6881
46	17.62	0.904	12.98	1.106	77.06	256.66	415.82	159.16	1.1880	1.6867
47	18.04	0.908	12.65	1.101	79.08	257.95	415.90	157.95	1.1919	1.6853
48	18.46	0.912	12.32	1.096	81.15	259.24	415.97	156.72	1.1958	1.6838
49	18.89	0.916	12.01	1.091	83.28	260.55	416.03	155.48	1.1997	1.6824
50	19.33	0.920	11.70	1.087	85.46	261.85	416.08	154.22	1.2037	1.6809
51	19.78	0.925	11.40	1.082	87.70	263.17	416.11	152.94	1.2076	1.6794
52	20.23	0.929	11.11	1.077	90.00	264.49	416.14	151.65	1.2115	1.6780
53	20.69	0.933	10.83	1.072	92.36	265.81	416.16	150.35	1.2155	1.6765
54	21.16	0.938	10.55	1.066	94.77	267.13	416.17	149.03	1.2194	1.6749
55	21.64	0.942	10.28	1.061	97.26	268.48	416.16	147.69	1.2233	1.6734
56	22.13	0.947	10.02	1.056	99.81	269.82	416.14	146.32	1.2273	1.6718
57	22.62	0.952	9.76	1.051	102.44	271.18	416.11	144.93	1.2313	1.6703
58	23.12	0.957	9.51	1.045	105.14	272.54	416.07	143.53	1.2353	1.8687
59	23.63	0.962	9.27	1.04	107.91	273.91	416.01	142.10	1.2392	1.6671
60	24.15	0.967	9.03	1.034	110.77	275.30	415.94	140.64	1.2433	1.6654
61	24.68	0.972	8.79	1.028	113.70	276.69	415.86	139.16	1.2473	1.6636
62	25.22	0.978	8.27	1.022	116.73	278.10	415.75	137.65	1.2513	1.6620
63	25.78	0.984	8.34	1.017	119.85	279.51	415.64	136.12	1.2554	1.6603
64	26.32	0.990	8.13	1.011	123.06	280.95	415.50	134.56	1.2595	1.6586
65	26.88	0.996	7.91	1.004	126.37	282.39	415.35	132.96	1.2636	1.6568
66	27.46	1.002	7.70	0.998	129.79	283.84	415.18	131.34	1.2677	1.6550
67	28.04	1.008	7.50	0.992	133.32	285.32	414.99	129.67	1.2719	1.6531
68	28.63	1.015	7.30	0.985	136.96	286.81	414.78	127.97	1.2761	1.6512
69	29.23	1.022	7.11	0.979	140.74	288.32	414.55	126.23	1.2803	1.6492
70	29.84	1.029	6.91	0.972	144.65	289.84	414.29	124.45	1.2846	1.6472
71	30.46	1.036	6.73	0.965	148.70	291.39	414.01	122.62	1.2889	1.6452
72	31.10	1.044	6.54	0.958	152.89	292.96	413.71	120.74	1.2933	1.6431
73	31.74	1.052	6.36	0.951	157.25	294.56	413.37	118.82	1.2977	1.6409
74	32.39	1.060	6.18	0.943	161.78	296.18	413.01	116.83	1.3022	1.6387
75	33.05	1.069	6.01	0.936	166.49	297.83	412.61	114.79	1.3067	1.6364
76	33.73	1.078	5.83	0.928	171.41	299.51	412.18	112.67	1.3113	1.6340
77	34.41	1.087	5.66	0.920	176.54	301.22	411.72	110.50	1.3160	1.6316
78	35.10	1.097	5.50	0.911	181.90	302.96	411.21	108.25	1.3208	1.6290
79	35.81	1.108	5.33	0.903	187.51	304.75	410.67	105.91	1.3256	1.6264
80	36.53	1.119	5.17	0.894	193.41	306.58	410.07	103.49	1.3306	1.6236
81	37.26	1.131	5.01	0.884	199.62	308.46	409.42	100.96	1.3357	1.6207
82	38.00	1.143	4.85	0.875	206.18	310.39	408.71	98.32	1.3409	1.6177
83	38.75	1.157	4.69	0.865	213.11	312.38	407.94	95.56	1.3462	1.6145
84	39.52	1.171	4.54	0.854	220.49	314.44	407.10	92.66	1.3517	1.6112
85	40.29	1.186	4.38	0.843	228.37	316.57	406.17	89.60	1.3574	1.6076
86	41.08	1.203	4.22	0.831	236.80	318.79	405.15	86.36	1.3634	1.3038
87	41.89	1.221	4.07	0.819	245.93	321.11	404.02	82.91	1.3695	1.5998
88	42.70	1.242	3.91	0.805	255.85	323.54	402.75	79.21	1.3760	1.5953
89	43.53	1.264	3.75	0.791	266.73	326.11	401.34	75.22	1.3828	1.5905
90	44.37	1.289	3.59	0.776	278.82	328.86	399.72	70.86	1.3901	1.5853
91	45.23	1.319	3.42	0.758	292.5	331.82	397.86	66.04	1.3980	1.5793
92	46.10	1.353	3.24	0.739	308.29	335.07	396.67	60.60	1.4065	1.5725
93	46.99	1.395	3.08	0.717	327.15	338.72	393.00	54.28	1.4162	1.5644
94	47.88	1.451	2.85	0.689	350.93	342.98	389.59	46.61	1.4275	1.5544
95	48.80	1.531	2.60	0.653	384.38	348.40	384.76	36.36	1.4418	1.5406
96.18	49.90	1.949	1.95	0.513	513.11	366.80	366.80	0.00	1.4912	1.4912

Note: pressure P is the absolute pressure.

2. Saturated R407C thermodynamic characteristic

t ℃	p' bar	p″ bar	v' dm³/kg	v″ dm³/kg	ρ' kg/dm³	ρ″ kg/dm³	h kJ/kg	h″ kJ/kg	t kJ/kg	s' kJ/kgK	s″ kJ/kgK
-50	0.75	0.505	0.713	416.20	1.402	2.403	132.74	380.81	248.07	0.7305	1.8614
-49	0.79	0.534	0.715	394.95	1.399	2.532	134.02	381.42	247.41	0.7363	1.8589
-48	0.83	0.565	0.716	375.01	1.396	2.667	135.29	382.04	246.74	0.7420	1.8564
-47	0.87	0.596	0.718	358.27	1.393	2.807	136.57	382.65	246.08	0.7477	1.8540
-46	0.91	0.630	0.719	338.65	1.391	2.953	137.85	383.26	245.41	0.7534	1.8516
-45	0.96	0.664	0.721	322.05	1.388	3.105	139.13	383.87	244.74	0.7591	1.8493
-44	1.00	0.700	0.722	306.43	1.385	3.263	140.42	384.48	244.06	0.7647	1.8470
-43	1.05	0.738	0.724	291.72	1.382	3.428	141.71	385.08	243.38	0.7704	1.8447
-42	1.10	0.777	0.725	277.84	1.379	3.599	143.00	385.69	242.69	0.7760	1.8425
-41	1.16	0.618	0.727	264.76	1.376	3.777	144.29	386.29	242.00	0.7816	1.8403
-40	1.21	0.861	0.729	252.41	1.373	3.962	145.58	366.89	241.31	0.7872	1.8381
-39	1.27	0.905	0.730	240.75	1.307	4.154	146.88	387.49	240.61	0.7928	1.8360
-38	1.33	0.951	0.732	229.73	1.366	4.353	148.18	388.09	239.91	0.7984	1.8339
-37	1.39	0.999	0.733	219.32	1.363	4.560	149.49	388.69	239.2	0.8039	1.8319
-36	1.45	1.049	0.735	209.47	1.360	4.744	150.80	389.28	238.49	0.8094	1.8299
-35	1.52	1.101	0.737	200.15	1.357	4.996	152.11	389.88	237.77	0.8150	1.8279
-34	1.59	1.155	0.739	191.33	1.354	5.227	153.42	390.47	237.05	0.8205	1.8260
-33	1.66	1.211	0.740	182.97	1.351	5.465	154.74	391.06	236.32	0.8260	1.8241
-32	1.73	1.269	0.742	175.05	1.348	5.713	156.06	391.64	235.59	0.8314	1.8222
-31	1.80	1.329	0.744	167.54	1.345	5.969	157.38	392.23	234.85	0.8369	1.6203
-30	1.88	1.392	0.745	160.42	1.341	6.234	158.71	392.81	234.10	0.8424	1.8185
-29	1.96	1.457	0.747	153.66	1.338	6.508	160.04	393.39	233.36	0.8478	1.8167
-28	2.04	1.524	0.749	147.24	1.336	6.792	161.37	393.97	232.60	0.8532	1.8150
-27	2.13	1.593	0.751	141.14	1.332	7.085	162.71	394.55	231.84	0.8588	1.8132
-26	2.22	1.665	0.753	135.35	1.329	7.388	164.05	395.12	231.08	0.8640	1.8115
-25	2.31	1.740	0.755	129.84	1.325	7.702	165.39	395.68	230.30	0.8694	1.8098
-24	2.40	1.817	0.756	124.60	1.322	8.026	166.73	396.26	229.53	0.8748	1.8082
-23	2.5	1.897	0.758	119.61	1.319	8.361	168.08	396.83	228.74	0.8801	1.8086
-22	2.60	1.979	0.760	114.86	1.315	8.706	169.43	397.39	227.96	0.8855	1.8049
-21	2.70	2.064	0.762	110.34	1.312	9.063	170.79	397.05	227.16	0.8908	1.8034
-20	2.81	2.152	0.764	106.03	1.309	9.432	172.15	398.51	226.36	0.8981	1.8018
-19	2.92	2.243	0.766	101.92	1.305	9.812	173.51	399.06	225.56	0.9014	1.8003
-18	3.03	2.337	0.768	98.00	1.302	10.204	174.87	399.01	224.74	0.9087	1.7987
-17	3.14	2.434	0.770	94.26	1.298	10.809	176.24	400.16	223.92	0.9120	1.7972
-16	3.26	2.534	0.722	90.70	1.295	11.026	177.61	400.71	223.10	0.9172	1.7958
-15	3.39	2.637	0.774	87.29	1.292	11.456	178.98	401.25	222.27	0.9226	1.7943
-14	3.51	2.744	0.776	84.04	1.288	11.899	180.36	401.79	221.43	0.9277	1.7929
-13	3.64	2.853	0.778	80.93	1.285	12.358	181.74	402.33	220.59	0.9329	1.7914
-12	3.78	2.966	0.781	77.96	1.281	12.827	183.12	402.66	219.74	0.9382	1.7900
-11	3.91	3.083	0.783	75.12	1.278	13.312	184.5	403.39	218.89	0.9434	1.7887
-10	4.05	3.203	0.785	72.40	1.274	13.812	185.89	403.91	218.02	0.9486	1.7873
-9	4.20	3.326	0.787	69.80	1.271	14.326	187.28	404.43	217.15	0.9538	1.7859
-8	4.35	3.454	0.789	67.31	1.267	14.856	188.67	404.95	216.28	0.9589	1.7846
-7	4.50	3.584	0.792	64.83	1.263	15.401	190.07	405.47	215.40	0.9641	1.7833
-6	4.65	3.719	0.794	62.65	1.26	15.963	191.47	405.98	214.51	0.9692	1.7620
-5	4.81	3.858	0.796	60.48	1.256	16.540	192.87	406.49	213.62	0.9744	1.7607
-4	4.98	4.00	0.798	58.36	1.252	17.135	194.28	406.99	212.71	0.9795	1.7794
-3	5.15	4.146	0.801	56.35	1.249	17.748	195.68	407.49	211.81	0.9847	1.7782
-2	5.32	4.297	0.803	54.42	1.245	18.375	197.09	407.98	210.89	0.9898	1.7769
-1	5.50	4.452	0.806	52.57	1.241	19.022	198.51	408.47	209.97	0.9949	1.7757
0	5.68	4.611	0.808	50.79	1.238	19.687	200.00	408.96	208.96	1.0000	1.7744
1	5.86	4.774	0.811	49.09	1.234	20.371	201.34	409.44	208.10	1.0051	1.7732
2	6.08	4.941	0.813	47.45	1.230	21.074	202.76	409.92	207.16	1.0102	1.772
3	6.25	5.113	0.816	45.88	1.228	21.797	204.19	410.39	206.21	1.0153	1.7708
4	6.45	5.290	0.818	44.37	1.222	22.540	205.61	410.86	205.25	1.0203	1.7696
5	6.68	5.471	0.821	42.91	1.218	23.303	207.04	411.33	204.28	1.0254	1.7685
6	6.87	5.657	0.823	41.51	1.215	24.088	208.48	411.79	203.31	1.0305	1.7873
7	7.08	5.847	0.826	40.17	1.211	24.894	209.91	412.24	202.33	1.0355	1.7661
8	7.30	6.043	0.829	38.88	1.207	25.722	211.35	412.69	201.34	1.0406	1.765
9	7.53	6.243	0.831	37.63	1.203	26.573	212.79	413.14	200.35	1.0456	1.7639
10	7.76	6.449	0.834	36.43	1.199	27.447	214.24	413.58	199.34	1.0507	1.7627
11	7.99	6.659	0.837	35.28	1.195	28.345	215.65	414.01	198.33	1.0557	1.7616
12	8.23	6.875	0.840	34.17	1.191	29.267	217.14	414.44	197.31	1.0607	1.7605
13	8.48	7.096	0.843	33.10	1.187	30.214	218.59	414.87	196.28	1.0658	1.7594
14	8.73	7.322	0.846	32.07	1.162	31.186	220.05	415.29	195.24	1.0708	1.7582
15	8.99	7.554	0.849	31.07	1.178	32.185	221.51	415.70	194.19	1.0758	1.7571
16	9.25	7.792	0.852	30.11	1.174	33.211	222.96	416.11	193.13	1.0808	1.7580
17	9.52	8.035	0.855	29.19	1.170	34.264	224.44	416.51	192.07	1.0859	1.7549
18	9.79	8.283	0.858	28.29	1.166	35.345	225.92	416.91	190.99	1.0909	1.7539
19	10.07	8.538	0.861	27.43	1.162	36.455	227.39	417.30	189.90	1.0959	1.7528

t ℃	p' bar	p″ bar	v' dm³/kg	v″ dm³/kg	ρ' kg/dm³	ρ″ kg/dm³	h kJ/kg	h″ kJ/kg	t kJ/kg	s' kJ/kgK	s″ kJ/kgK
20	10.36	8.798	0.864	26.60	1.157	37.595	228.68	417.68	188.81	1.1009	1.7517
21	10.65	9.064	0.867	25.80	1.153	38.765	230.36	418.08	187.70	1.1059	1.7506
22	10.85	9.337	0.871	25.02	1.149	39.967	231.85	418.44	186.59	1.1109	1.7495
23	11.25	9.615	0.874	24.27	1.144	41.201	233.34	418.8	185.48	1.1159	1.7484
24	11.56	9.90	0.877	23.55	1.140	42.468	234.84	419.16	184.32	1.1210	1.7473
25	11.88	10.191	0.881	22.85	1.135	43.768	236.35	419.52	183.17	1.1260	1.7463
26	12.20	10.459	0.884	22.17	1.131	45.104	237.86	419.86	182.01	1.1310	1.7452
27	12.53	10.793	0.888	21.52	1.126	46.475	239.37	420.20	160.83	1.1360	1.7441
28	12.87	11.104	0.891	20.88	1.122	47.884	240.89	420.53	179.65	1.1410	1.7430
29	13.21	11.422	0.895	20.27	1.117	49.330	242.41	420.8	178.45	1.1460	1.7419
30	13.56	11.746	0.899	9.68	1.113	50.815	243.95	421.18	177.23	1.1511	1.7408
31	13.92	12.078	0.903	19.11	1.108	52.341	245.48	421.49	176.01	1.1561	1.7397
32	14.28	12.416	0.906	18.55	1.103	53.908	247.03	421.79	174.76	1.1611	1.7386
33	14.65	12.762	0.910	18.01	1.099	55.518	248.58	422.09	173.51	1.1662	1.7375
34	15.03	13.115	0.914	17.49	1.094	57.171	250.14	422.37	172.24	1.1712	1.7364
35	15.41	13.475	0.918	16.99	1.089	58.871	251.70	422.65	170.95	1.1763	1.7353
36	15.80	13.843	0.922	16.50	1.084	60.617	253.28	422.92	169.65	1.1813	1.7342
37	16.20	14.219	0.927	16.02	1.079	62.413	254.86	423.18	168.33	1.1864	1.7331
38	16.61	14.602	0.931	15.56	1.074	64.258	256.45	423.44	166.99	1.1915	1.7319
39	17.03	14.993	0.935	15.12	1.069	66.155	258.05	423.68	165.63	1.1965	1.7308
40	17.45	15.392	0.940	14.68	1.064	68.106	259.65	423.91	164.26	1.2016	1.7296
41	17.88	15.799	0.944	14.26	1.059	70.113	261.27	424.13	162.66	1.2067	1.7265
42	18.31	16.214	0.949	13.85	1.054	72.176	262.90	424.34	161.44	1.2118	1.7273
43	18.76	16.638	0.954	13.40	1.049	74.303	264.54	424.54	160.01	1.2169	1.7261
44	19.21	17.070	0.958	13.07	1.043	76.491	266.19	424.73	158.55	1.2221	1.7249
45	19.67	17.510	0.963	12.70	1.038	78.743	267.84	424.91	157.07	1.2272	1.7236
46	20.14	17.959	0.908	12.34	1.033	81.062	269.52	425.08	155.56	1.2323	1.7224
47	20.62	18.417	0.973	11.08	1.027	83.452	271.20	425.23	154.03	1.2375	1.7211
48	21.11	18.884	0.979	11.64	1.022	85.915	272.90	425.37	152.47	1.2427	1.7198
49	21.60	19.381	0.984	11.31	1.018	88.455	274.61	425.49	150.89	1.2478	1.7185
50	22.11	19.846	0.990	10.98	1.011	91.074	276.33	425.60	149.28	1.2530	1.7121
51	22.62	20.341	0.995	10.66	1.005	93.777	278.07	425.70	147.63	1.2582	1.7158
52	23.14	20.845	1.001	10.38	0.999	96.567	279.82	425.78	145.96	1.2535	1.7145
53	23.67	21.359	1.007	10.06	0.993	99.449	281.59	425.84	144.26	1.2687	1.7310
54	24.21	21.883	1.013	9.76	0.967	102.426	283.37	425.89	142.52	1.2740	1.7116
55	24.75	22.417	1.019	9.48	0.981	105.505	285.17	425.91	140.74	1.2792	1.7101
56	25.31	22.961	1.026	9.20	0.975	108.690	286.99	425.92	138.93	1.2845	1.7086
57	25.89	23.518	1.032	8.93	0.969	111.986	288.82	425.9	137.08	1.2898	1.7070
58	26.45	24.081	1.039	8.67	0.983	115.400	290.68	425.67	135.19	1.2951	1.7054
59	27.04	24.657	1.046	8.41	0.956	118.939	292.55	425.81	133.26	1.3005	1.7037
60	27.63	25.244	1.053	8.16	0.950	122.609	294.45	425.72	131.28	1.3058	1.702
61	28.23	25.842	1.061	7.91	0.943	126.429	296.36	425.61	129.25	1.3112	1.7002
62	28.85	26.451	1.068	7.67	0.938	130.377	298.30	425.46	127.18	1.3166	1.6984
63	29.47	27.072	1.076	7.44	0.929	134.492	300.26	425.31	125.05	1.3220	1.6965
64	30.10	27.705	1.084	7.21	0.992	138.775	302.24	425.11	122.87	1.3275	1.6945
65	30.75	28.35	1.093	6.98	0.915	143.236	304.24	424.88	120.63	1.3330	1.6925
66	31.40	29.007	1.102	6.76	0.908	147.889	308.27	424.61	118.34	1.3384	1.6904
67	32.07	29.677	1.111	6.55	0.900	152.745	308.33	424.30	115.97	1.3440	1.6882
68	32.74	30.38	1.121	6.34	0.892	157.822	310.41	423.95	113.54	1.3495	1.8858
69	33.43	31.057	1.131	6.13	0.884	163.135	312.52	423.56	111.04	1.3551	1.6634
70	34.12	31.768	1.141	5.93	0.870	168.702	314.66	423.12	105.48	1.3606	1.6609
71	34.83	32.49	1.152	5.73	0.868	174.545	318.83	422.63	105.80	1.3663	1.6762
72	35.54	33.229	1.164	5.53	0.859	180.687	310.03	422.08	103.05	1.3719	1.6754
73	36.27	33.982	1.176	5.34	0.850	187.163	321.28	421.48	100.22	1.3776	1.6725
74	37.01	34.75	1.190	5.16	0.841	93.974	323.62	420.00	97.28	1.3533	1.6694
75	37.78	35.535	1.204	4.97	0.831	201.183	325.02	420.06	94.24	1.3890	1.6661
76	38.52	36.336	1.219	4.79	0.821	208.819	328.15	419.24	91.09	1.3948	1.6626
77	39.30	37.155	1.235	4.61	0.810	216.927	330.51	418.33	87.81	1.4005	1.6589
78	40.08	37.992	1.253	4.43	0.798	225.558	332.02	417.32	84.41	1.4064	1.6550
79	40.88	38.847	1.272	4.26	0.788	234.770	335.3	416.22	80.86	1.4122	1.6508
80	41.68	39.724	1.294	4.09	0.773	244.654	337.84	414.99	77.15	1.4181	1.6463
81	42.50	40.622	1.319	3.92	0.758	255.284	340.36	413.63	73.28	1.424	1.6414
82	43.33	41.544	1.347	3.75	0.742	266.785	342.92	412.12	69.2	1.430	1.6362
83	44.17	42.490	1.382	3.58	0.724	279.310	345.52	410.43	64.91	1.436	1.6304
84	45.03	43.470	1.428	3.41	0.701	293.100	348.17	408.53	60.35	1.442	1.6241
85	45.89	44.480	1.490	3.24	0.671	308.520	350.87	406.33	55.47	1.446	1.6171
86.4	46.20	46.200	1.961	1.96	0.510	510.000	368.89	368.89	0.00	1.5113	1.5113

3. Enthalpy-humidity chart

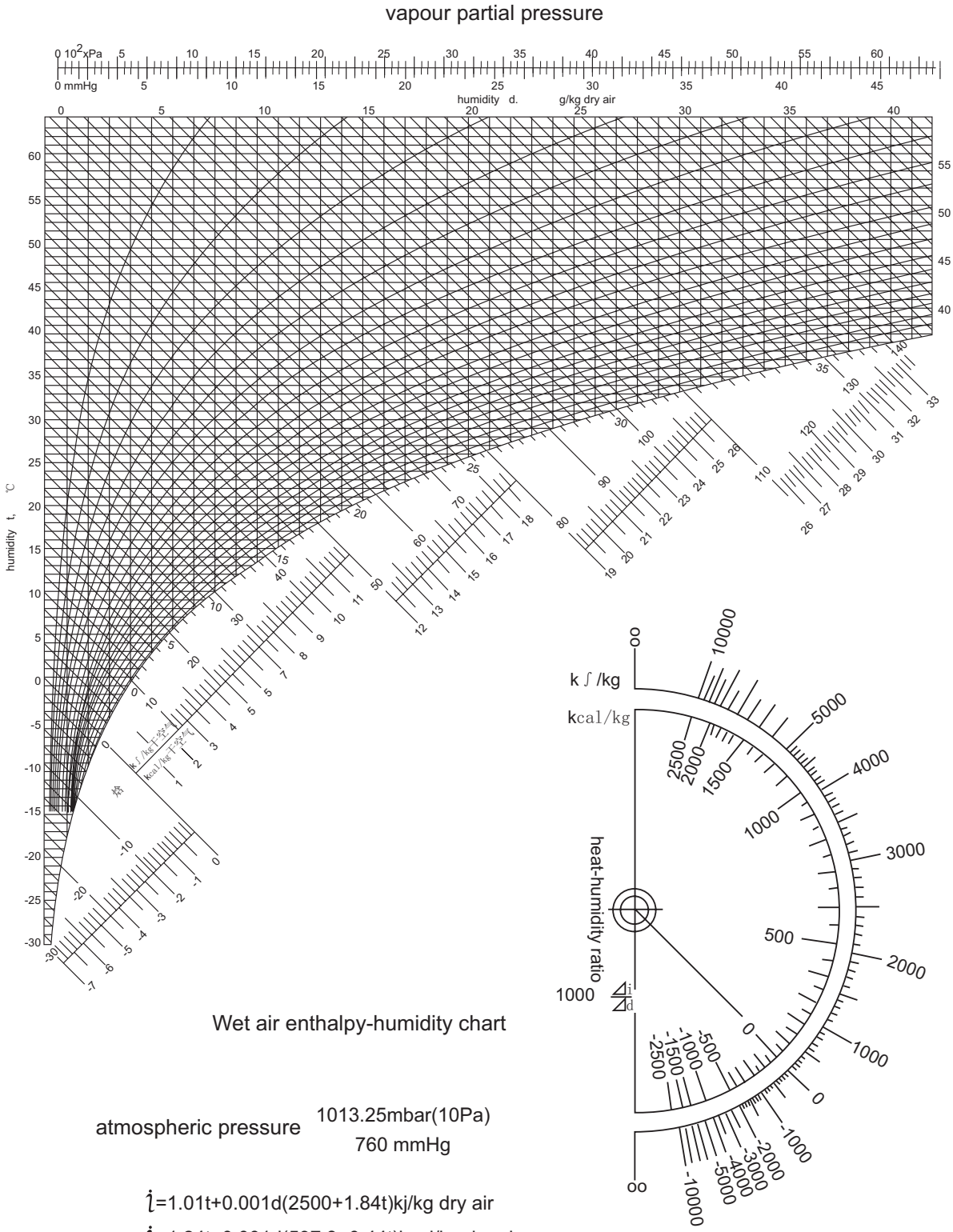

Wet air enthalpy-humidity chart

atmospheric pressure 1013.25mbar(10Pa)
760 mmHg

i=1.01t+0.001d(2500+1.84t)kj/kg dry air

i=1.24t+0.001d(597.3+0.44t)kcal/kg dry air

4. Outdoor performance at different temperature

Cooling mode:

1) 8HP capacity

cooling

capacity factor %	outdoor temp.(℃ DB)	indoor temp.(℃ WB)													
		14(℃)		16(℃)		18(℃)		19(℃)		20(℃)		22(℃)		24(℃)	
		TC	PI	TC	PI	TC	PI	TC	PI	TC	PI	TC	PI	TC	PI
		KW	KW	KW	KW	KW	KW	KW	KW	KW	KW	KW	KW	KW	KW
130%	5	20.4	3.59	24.1	4.34	27.8	5.08	29.7	5.72	30.9	5.58	31.8	5.09	32.3	4.6
	10	20.4	3.77	24.1	4.54	27.8	5.32	29.7	5.71	30.0	5.61	30.7	5.36	31.4	5.11
	15	20.4	3.95	24.1	4.74	27.8	5.56	28.7	5.7	29.1	5.64	29.7	5.63	30.5	5.66
	20	20.4	4.15	24.1	5.26	27.5	6.36	27.8	6.39	28.1	6.42	28.8	6.48	29.5	6.54
	25	20.4	4.98	24.1	6.31	26.5	7.18	26.8	7.21	27.2	7.25	27.9	7.32	28.6	7.39
	30	20.4	5.86	24.1	7.51	25.6	8.05	25.9	8.05	26.3	8.06	26.9	8.12	27.7	8.41
	35	20.4	6.96	24.0	8.75	24.7	8.85	25.0	8.89	25.3	8.94	26.0	9.03	26.7	9.12
	41	20.4	7.93	23.1	9.44	23.8	9.53	24.1	9.59	24.5	9.64	25.1	9.85	25.9	9.95
	43	20.4	8.59	22.6	9.95	23.2	10.85	23.6	11.05	24.0	11.15	24.6	11.35	25.3	11.5
120%	5	18.9	3.36	22.2	3.96	25.7	4.42	27.3	4.98	29.4	5.39	31.1	5.46	31.7	5.07
	10	18.9	3.44	22.2	4.15	25.7	4.86	27.3	5.22	29.0	5.58	30.2	5.54	30.8	5.31
	15	18.9	3.6	22.2	4.34	25.7	5.10	27.3	5.46	28.7	5.72	29.3	5.62	29.9	5.55
	20	18.9	3.77	22.2	4.68	25.7	5.76	27.3	6.33	27.7	6.38	28.3	6.43	28.9	6.49
	25	18.9	4.45	22.2	5.62	25.7	6.91	26.4	7.17	26.8	7.20	27.4	7.27	28.0	7.33
	30	18.9	5.18	22.2	6.67	25.1	7.96	25.5	8	25.9	8.04	26.4	8.11	27.0	8.19
	35	18.9	6.22	22.2	7.87	24.2	8.79	24.6	8.83	24.9	8.88	25.5	8.96	26.1	9.05
	41	18.9	7.17	22.2	9.22	23.3	9.44	23.6	9.45	24.0	9.45	24.6	9.85	25.2	9.85
	43	18.9	7.68	22.2	10.55	22.8	10.7	23.1	10.85	23.4	11.0	24.0	11.25	24.7	11.45
110%	5	17.3	2.98	20.4	3.59	23.5	4.21	25.0	4.55	26.6	4.84	30.6	5.75	31.3	5.43
	10	17.3	3.12	20.4	3.76	23.5	4.41	25.0	4.74	26.6	5.07	29.7	5.72	30.3	5.52
	15	17.3	3.26	20.4	3.93	23.5	4.61	25.0	4.93	26.6	5.30	28.7	5.69	29.3	5.61
	20	17.3	3.42	20.4	4.13	23.5	5.07	25.0	5.56	26.6	6.08	27.8	6.39	28.4	6.44
	25	17.3	3.95	20.4	4.96	23.5	6.08	25.0	7.17	25.9	7.49	26.5	7.55	27.1	7.61
	30	17.3	4.69	20.4	5.89	23.5	7.23	25.0	7.89	25.2	7.99	25.9	8.05	26.5	8.12
	35	17.3	5.51	20.4	6.94	23.5	8.53	24.1	8.78	24.4	8.82	25.0	8.89	25.6	8.97
	41	17.3	6.45	20.4	8.14	22.8	9.57	23.2	9.61	23.5	9.56	24.0	9.75	24.7	9.95
	43	17.3	6.95	20.4	8.65	22.2	10.1	22.7	10.45	23.0	10.05	23.5	10.25	24.1	10.45
100%	5	15.7	2.79	18.5	3.23	21.3	3.83	22.6	4.07	24.2	4.34	27.0	4.91	30.7	5.75
	10	15.7	2.81	18.5	3.38	21.3	3.96	22.6	4.26	24.2	4.55	27.0	5.15	29.7	5.72
	15	15.7	2.93	18.5	3.53	21.3	4.14	22.6	4.45	24.2	4.76	27.0	5.39	28.7	5.69
	20	15.7	3.07	18.5	3.70	21.3	4.41	22.6	4.84	24.2	5.28	27.0	6.22	27.8	6.39
	25	15.7	3.47	18.5	4.34	21.3	5.30	22.6	5.81	24.2	6.34	26.4	7.16	26.9	7.22
	30	15.7	4.1	18.5	5.15	21.3	6.29	22.6	6.90	24.2	7.49	25.4	7.99	25.9	8.06
	35	15.7	4.84	18.5	6.07	21.3	7.42	22.6	8.00	24.0	8.75	24.5	8.83	25.0	8.9
	41	15.7	5.66	18.5	7.05	21.3	8.68	22.6	9.15	23.1	9.59	23.6	9.65	24.1	9.75
	43	15.7	6.17	18.5	7.56	21.3	9.19	22.6	10.05	22.5	10.05	23.1	10.15	23.6	10.25

capacity factor %	outdoor temp.(℃ DB)	indoor temp.(℃ WB)													
		14(℃)		16(℃)		18(℃)		19(℃)		20(℃)		22(℃)		24(℃)	
		TC	PI	TC	PI	TC	PI	TC	PI	TC	PI	TC	PI	TC	PI
		KW	KW	KW	KW	KW	KW	KW	KW	KW	KW	KW	KW	KW	KW
90%	5	14.2	2.38	16.7	2.87	19.3	3.37	20.5	3.61	21.8	3.85	24.3	4.38	26.8	4.89
	10	14.2	2.5	16.7	3.00	19.3	3.52	20.5	3.78	21.8	4.04	24.3	4.58	26.8	5.12
	15	14.2	2.62	16.7	3.13	19.3	3.67	20.5	3.95	21.8	4.23	24.3	4.78	26.8	5.35
	20	14.2	2.74	16.7	3.28	19.3	3.85	20.5	4.16	21.8	4.53	24.3	5.32	26.8	6.16
	25	14.2	3.02	16.7	3.76	19.3	4.56	20.5	4.99	21.8	5.44	24.3	6.39	26.3	7.16
	30	14.2	3.58	16.7	4.46	19.3	5.42	20.5	5.93	21.8	6.46	24.3	7.63	25.4	7.98
	35	14.2	4.21	16.7	5.24	19.3	6.38	20.5	6.99	21.8	7.62	24.0	8.76	24.5	8.82
	41	14.2	4.91	16.7	6.13	19.3	7.48	20.5	7.7	21.8	8.92	23.1	9.58	23.4	9.65
	43	14.2	5.43	16.7	6.49	19.3	7.97	20.5	8.55	21.8	9.64	22.5	9.95	22.9	10.15
80%	5	12.6	2.12	14.8	2.53	17.1	2.94	18.3	3.16	19.3	3.38	21.6	3.83	23.9	4.27
	10	12.6	2.21	14.8	2.64	17.1	3.08	18.3	3.31	19.3	3.54	21.6	4.01	23.9	4.48
	15	12.6	2.3	14.8	2.75	17.1	3.22	18.3	3.46	19.3	3.70	21.6	4.19	23.9	4.69
	20	12.6	2.41	14.8	2.88	17.1	3.37	18.3	3.62	19.3	3.88	21.6	4.48	23.9	5.38
	25	12.6	2.6	14.8	3.21	17.1	3.88	18.3	4.23	19.3	4.60	21.6	5.38	23.9	6.67
	30	12.6	3.08	14.8	3.81	17.1	4.60	18.3	5.03	19.3	5.46	21.6	6.39	23.9	7.39
	35	12.6	3.62	14.8	4.48	17.1	5.42	18.3	5.92	19.3	6.44	21.6	7.54	23.9	8.71
	41	12.6	4.32	14.8	5.22	17.1	6.32	18.3	6.92	19.3	7.56	21.6	8.82	22.8	9.57
	43	12.6	4.98	14.8	5.67	17.1	6.70	18.3	7.52	19.3	8.31	21.6	9.11	21.7	10.15
70%	5	11.0	1.84	13.0	2.18	14.9	2.54	15.9	2.72	16.9	2.92	18.9	3.3	20.9	2.69
	10	11.0	1.92	13.0	2.28	14.9	2.66	15.9	2.85	16.9	3.05	18.9	3.45	20.9	3.86
	15	11.0	2	13.0	2.38	14.9	2.78	15.9	2.98	16.9	3.18	18.9	3.6	20.9	4.03
	20	11.0	2.09	13.0	2.49	14.9	2.91	15.9	3.12	16.9	3.34	18.9	3.78	20.9	4.27
	25	11.0	2.2	13.0	2.70	14.9	3.24	15.9	3.53	16.9	3.83	18.9	4.46	20.9	5.12
	30	11.0	2.61	13.0	3.20	14.9	3.85	15.9	4.19	16.9	4.54	18.9	5.29	20.9	6.08
	35	11.0	3.07	13.0	3.76	14.9	4.52	15.9	4.93	16.9	5.34	18.9	6.23	20.9	7.17
	41	11.0	3.57	13.0	4.33	14.9	5.28	15.9	5.66	16.9	6.24	18.9	7.28	20.9	8.4
	43	11.0	3.77	13.0	4.54	14.9	5.83	15.9	5.81	16.9	6.72	18.9	7.91	20.9	9.15
60%	5	9.4	1.57	11.1	1.86	12.8	2.15	13.7	2.32	14.6	2.46	16.2	2.77	17.9	3.09
	10	9.4	1.64	11.1	1.94	12.8	2.25	13.7	2.41	14.6	2.57	16.2	2.9	17.9	3.24
	15	9.4	1.71	11.1	2.02	12.8	2.35	13.7	2.52	14.6	2.68	16.2	3.03	17.9	3.39
	20	9.4	1.78	11.1	2.11	12.8	2.45	13.7	2.63	14.6	2.81	16.2	3.18	17.9	3.55
	25	9.4	1.86	11.1	2.23	12.8	2.66	13.7	2.88	14.6	3.12	16.2	3.61	17.9	4.13
	30	9.4	2.17	11.1	2.65	12.8	3.16	13.7	3.42	14.6	3.70	16.2	4.28	17.9	4.9
	35	9.4	2.55	11.1	3.11	12.8	3.70	13.7	4.02	14.6	4.35	16.2	5.03	17.9	5.77
	41	9.4	2.97	11.1	3.60	12.8	4.31	13.7	4.68	14.6	5.07	16.2	5.88	17.9	6.75
	43	9.4	3.21	11.1	3.67	12.8	4.67	13.7	5.19	14.6	5.52	16.2	6.29	17.9	7.35
50%	5	7.9	1.32	9.3	1.57	10.7	1.78	11.4	1.87	12.1	2.01	13.5	2.28	14.9	2.53
	10	7.9	1.37	9.3	1.61	10.7	1.86	11.4	1.98	12.1	2.11	13.5	2.38	14.9	2.65
	15	7.9	1.42	9.3	1.65	10.7	1.94	11.4	2.07	12.1	2.21	13.5	2.48	14.9	2.77
	20	7.9	1.48	9.3	1.75	10.7	2.02	11.4	2.16	12.1	2.30	13.5	2.6	14.9	2.9
	25	7.9	1.55	9.3	1.82	10.7	2.12	11.4	2.29	12.1	2.47	13.5	2.84	14.9	3.23
	30	7.9	1.77	9.3	2.13	10.7	2.51	11.4	2.72	12.1	2.93	13.5	3.38	14.9	3.83
	35	7.9	2.08	9.3	2.50	10.7	2.96	11.4	3.19	12.1	3.44	13.5	3.96	14.9	4.5
	41	7.9	2.43	9.3	2.74	10.7	3.44	11.4	3.72	12.1	4.01	13.5	4.61	14.9	5.25
	43	7.9	2.67	9.3	2.98	10.7	3.74	11.4	4.02	12.1	4.31	13.5	5	14.9	5.7

2) 10HP capacity

cooling

capacity factor %	outdoor temp.(℃ DB)	indoor temp.(℃ WB)													
		14(℃)		16(℃)		18(℃)		19(℃)		20(℃)		22(℃)		24(℃)	
		TC	PI	TC	PI	TC	PI	TC	PI	TC	PI	TC	PI	TC	PI
		KW	KW	KW	KW	KW	KW	KW	KW	KW	KW	KW	KW	KW	KW
130%	5	25.2	5.20	29.7	6.23	34.2	7.17	36.2	7.96	37.4	7.89	38.1	7.15	39.1	7.01
	10	25.2	5.29	29.7	6.34	34.2	7.41	36.6	7.93	36.9	7.80	37.8	7.46	38.6	7.12
	15	25.2	5.52	29.7	6.62	34.2	7.73	35.9	7.92	36.2	7.85	36.6	7.90	37.5	7.91
	20	25.2	5.80	29.7	7.32	33.8	8.82	34.8	8.86	34.6	8.91	35.5	8.98	36.3	9.07
	25	25.2	6.93	29.7	8.76	32.8	9.9	33.6	10.0	33.5	10.0	34.4	10.1	35.1	10.2
	30	25.2	8.21	29.7	9.7	31.5	11.1	31.8	11.1	32.3	11.2	32.2	11.3	33.9	11.4
	35	25.2	9.7	29.4	12.1	30.8	12.2	30.7	12.3	31.2	12.3	32.1	12.5	32.8	12.6
	41	25.2	11.2	29.2	13.2	29.2	13.3	29.7	13.3	30.0	13.3	31.0	13.3	31.4	13.4
	43	25.2	12.1	28.7	13.4	28.6	13.4	29.1	13.4	29.3	13.4	30.4	13.47	30.5	13.50
120%	5	23.4	4.75	27.4	5.59	31.6	6.56	33.7	7.08	35.7	7.60	37.6	7.76	38.4	7.43
	10	23.4	4.84	27.4	5.80	31.6	6.79	33.7	7.28	35.7	7.76	37.2	7.71	37.9	7.40
	15	23.4	5.05	27.4	6.07	31.6	7.08	33.7	7.59	35.2	7.95	35.9	7.81	36.7	7.86
	20	23.4	5.29	27.4	6.53	31.6	8.01	33.7	8.80	34.1	8.85	34.8	8.92	35.6	9.01
	25	23.4	6.21	27.4	7.81	31.6	9.59	32.6	9.9	33.0	10.0	33.8	10.1	34.4	10.2
	30	23.4	7.36	27.4	9.26	30.8	11.0	31.3	11.1	31.7	11.2	32.4	11.2	33.3	11.3
	35	23.4	8.63	27.4	10.9	30.2	12.1	30.2	12.2	30.6	12.2	31.4	12.3	32.1	12.5
	41	23.4	10.1	27.4	12.5	28.6	13.3	29.2	13.3	29.6	13.3	29.9	13.3	30.7	13.3
	43	23.4	11.0	27.4	13.3	28.0	13.4	28.6	13.4	28.9	13.4	29.2	13.4	30.2	13.48
110%	5	21.5	4.31	25.1	5.09	29.0	5.95	30.9	6.45	32.7	6.95	37.0	8.01	37.7	7.73
	10	21.5	4.40	25.1	5.27	29.0	6.16	30.9	6.62	32.7	7.07	36.5	7.96	37.2	7.68
	15	21.5	4.60	25.1	5.51	29.0	6.45	30.9	6.91	32.7	7.37	35.3	7.92	36.1	7.80
	20	21.5	4.81	25.1	5.79	29.0	7.06	30.9	7.74	32.7	8.45	34.2	8.87	34.9	8.93
	25	21.5	5.53	25.1	6.92	29.0	8.45	30.9	9.26	32.3	9.9	33.0	10.0	33.7	10.1
	30	21.5	6.53	25.1	8.19	29.0	10.1	30.9	10.9	30.9	11.0	31.9	11.2	32.6	11.2
	35	21.5	7.67	25.1	9.63	29.0	11.1	29.7	12.1	30.1	12.2	30.7	12.3	31.4	12.5
	41	21.5	8.96	25.1	11.3	28.3	12.0	28.7	13.1	29.0	13.1	29.3	13.2	30.2	13.2
	43	21.5	9.7	25.1	12.2	27.6	12.9	28.1	13.2	28.3	13.2	28.6	13.3	29.5	13.3
100%	5	19.4	3.90	22.8	4.59	26.3	5.40	28.0	6.10	29.7	6.19	33.2	7.06	38.3	7.98
	10	19.4	3.97	22.8	4.75	26.3	5.54	28.0	5.95	29.7	6.36	33.2	7.18	37.7	7.95
	15	19.4	4.14	22.8	4.96	26.3	5.79	28.0	6.23	29.7	6.64	33.2	7.49	37	7.91
	20	19.4	4.33	22.8	5.19	26.3	6.16	28.0	6.75	29.7	7.36	33.2	8.64	36.4	8.87
	25	19.4	4.87	22.8	6.07	26.3	7.37	28.0	8.08	29.7	8.80	32.4	9.9	35.1	10.0
	30	19.4	5.76	22.8	7.12	26.3	8.74	28.0	9.43	29.7	10.4	31.2	11.1	33.5	11.1
	35	19.4	6.75	22.8	8.42	26.3	10.28	28.0	9.8	29.5	12.1	30.1	12.2	31.9	12.3
	41	19.4	7.89	22.8	9.8	26.3	11.97	28.0	12.5	28.4	13.0	29.0	13.2	29.6	12.9
	43	19.4	8.79	22.8	10.6	26.3	12.95	28.0	12.9	27.7	13.3	28.5	13.3	28.9	13.2

capacity factor %	outdoor temp.(℃ DB)	indoor temp.(℃ WB)													
		14(℃)		16(℃)		18(℃)		19(℃)		20(℃)		22(℃)		24(℃)	
		TC	PI	TC	PI	TC	PI	TC	PI	TC	PI	TC	PI	TC	PI
		KW	KW	KW	KW	KW	KW	KW	KW	KW	KW	KW	KW	KW	KW
90%	5	17.6	3.49	20.6	4.16	23.7	4.85	25.3	5.15	26.9	5.62	29.9	6.20	33.0	6.93
	10	17.6	3.55	20.6	4.24	23.7	4.93	25.3	5.30	26.9	5.66	29.9	6.40	33.0	7.13
	15	17.6	3.70	20.6	4.42	23.7	5.15	25.3	5.52	26.9	5.92	29.9	6.68	33.0	7.45
	20	17.6	3.87	20.6	4.63	23.7	5.40	25.3	5.82	26.9	6.34	29.9	7.41	33.0	8.56
	25	17.6	4.26	20.6	5.27	23.7	6.37	25.3	6.96	26.9	7.57	29.9	8.86	32.4	9.9
	30	17.6	5.03	20.6	6.23	23.7	7.54	25.3	8.24	26.9	8.97	29.9	10.5	31.3	11.0
	35	17.6	5.88	20.6	7.30	23.7	8.86	25.3	9.7	26.9	10.6	29.5	12.1	30.1	12.2
	41	17.6	6.77	20.6	8.51	23.7	10.3	25.3	11.3	26.9	12.1	28.2	13.2	29.0	13.2
	43	17.6	7.02	20.6	9.24	23.7	11.0	25.3	11.9	26.9	12.5	27.0	13.3	28.4	13.3
80%	5	15.8	3.10	18.2	3.68	21.2	4.27	22.5	4.63	23.8	4.84	26.6	5.47	29.3	5.92
	10	15.8	3.15	18.2	3.74	21.2	4.35	22.5	4.74	23.8	4.97	26.6	5.62	29.3	6.26
	15	15.8	3.27	18.2	3.90	21.2	4.54	22.5	4.86	23.8	5.19	26.6	5.87	29.3	6.54
	20	15.8	3.42	18.2	4.07	21.2	4.74	22.5	5.09	23.8	5.43	26.6	6.26	29.3	7.21
	25	15.8	3.68	18.2	4.52	21.2	5.43	22.5	5.92	23.8	6.42	26.6	7.49	29.3	8.63
	30	15.8	4.33	18.2	5.34	21.2	6.42	22.5	7.01	23.8	7.60	26.6	8.87	29.3	10.2
	35	15.8	5.08	18.2	6.25	21.2	7.54	22.5	8.23	23.8	8.93	26.6	10.4	29.3	12.1
	41	15.8	5.75	18.2	7.43	21.2	8.78	22.5	9.56	23.8	10.4	26.1	12.0	28.1	12.9
	43	15.8	6.13	18.2	7.43	21.2	9.48	22.5	10.2	23.8	10.9	24.9	12.5	27.5	13.2
70%	5	13.6	2.70	16.2	3.20	18.6	3.59	19.6	4.01	20.8	4.18	23.2	4.73	25.7	5.12
	10	13.6	2.75	16.2	3.25	18.6	3.76	19.6	4.03	20.8	4.30	23.2	4.85	25.7	5.41
	15	13.6	2.86	16.2	3.38	18.6	3.93	19.6	4.20	20.8	4.48	23.2	5.05	25.7	5.65
	20	13.6	2.98	16.2	3.53	18.6	4.10	19.6	4.40	20.8	4.69	23.2	5.30	25.7	5.97
	25	13.6	3.14	16.2	3.82	18.6	4.57	19.6	4.96	20.8	5.37	23.2	6.23	25.7	7.14
	30	13.6	3.70	16.2	4.49	18.6	5.40	19.6	5.86	20.8	6.35	23.2	7.37	25.7	8.46
	35	13.6	4.32	16.2	5.27	18.6	6.32	19.6	6.87	20.8	7.45	23.2	8.65	25.7	9.9
	41	13.6	4.92	16.2	6.13	18.6	7.38	19.6	8.02	20.8	8.67	23.2	10.0	25.7	11.6
	43	13.6	5.29	16.2	6.64	18.6	7.99	19.6	8.75	20.8	9.40	22.0	10.5	25.1	12.1
60%	5	11.8	2.33	13.8	2.75	15.9	3.14	16.8	3.40	17.8	3.57	19.9	3.87	22.0	4.29
	10	11.8	2.37	13.8	2.79	15.9	3.20	16.8	3.54	17.8	3.65	19.9	4.10	22.0	4.57
	15	11.8	2.47	13.8	2.90	15.9	3.33	16.8	3.57	17.8	3.81	19.9	4.27	22.0	4.76
	20	11.8	2.57	13.8	3.02	15.9	3.48	16.8	3.72	17.8	3.97	19.9	4.47	22.0	4.98
	25	11.8	2.68	13.8	3.18	15.9	3.76	16.8	4.08	17.8	4.40	19.9	5.07	22.0	5.77
	30	11.8	3.10	13.8	3.75	15.9	5.65	16.8	4.81	17.8	5.16	19.9	5.98	22.0	6.84
	35	11.8	3.62	13.8	4.37	15.9	5.20	16.8	5.63	17.8	6.08	19.9	7.02	22.0	8.02
	41	11.8	4.20	13.8	3.83	15.9	5.98	16.8	6.16	17.8	7.06	19.9	8.18	22.0	9.36
	43	11.8	4.57	13.8	4.20	15.9	6.23	16.8	6.76	17.8	7.67	19.9	8.91	22.0	9.56
50%	5	9.76	1.98	11.5	2.30	13.2	2.64	14.0	2.82	14.8	2.96	16.6	3.26	18.3	3.65
	10	9.76	2.00	11.5	2.33	13.2	2.68	14.0	2.85	14.8	3.02	16.6	3.38	18.3	3.75
	15	9.76	2.08	11.5	2.42	13.2	2.77	14.0	2.96	14.8	3.14	16.6	3.52	18.3	3.91
	20	9.76	2.16	11.5	2.52	13.2	2.90	14.0	3.09	14.8	3.29	16.6	3.68	18.3	4.09
	25	9.76	2.25	11.5	2.63	13.2	3.03	14.0	3.26	14.8	3.51	16.6	4.02	18.3	4.54
	30	9.76	2.55	11.5	3.04	13.2	3.57	14.0	3.85	14.8	4.14	16.6	4.73	18.3	5.37
	35	9.76	2.97	11.5	3.55	13.2	4.18	14.0	4.49	14.8	4.84	16.6	5.54	18.3	6.29
	41	9.76	3.46	11.5	4.12	13.2	4.82	14.0	5.19	14.8	5.62	16.6	6.63	18.3	7.40
	43	9.76	3.82	11.5	4.48	13.2	5.20	14.0	5.92	14.8	6.09	16.6	6.99	18.3	8.24

3) 12HP capacity

cooling

capacity factor %	outdoor temp.(℃ DB)	indoor temp.(℃ WB)													
		14(℃)		16(℃)		18(℃)		19(℃)		20(℃)		22(℃)		24(℃)	
		TC	PI	TC	PI	TC	PI	TC	PI	TC	PI	TC	PI	TC	PI
		KW	KW	KW	KW	KW	KW	KW	KW	KW	KW	KW	KW	KW	KW
130%	5	30.3	6.16	35.8	7.37	41.2	8.48	44.0	9.42	45.8	9.33	47.1	8.47	47.9	8.29
	10	30.3	6.26	35.8	7.50	41.2	8.77	44.0	9.39	44.5	9.23	45.5	8.83	46.5	8.42
	15	30.3	6.53	35.8	7.83	41.2	9.15	42.5	9.38	43.1	9.29	44.0	9.35	45.2	9.36
	20	30.3	6.86	35.8	8.67	40.8	10.45	41.2	10.49	41.7	10.55	42.7	10.63	43.7	10.73
	25	30.3	8.21	35.8	10.37	39.3	11.8	39.7	11.8	40.3	11.9	41.4	12.0	42.4	12.1
	30	30.3	9.72	35.8	11.5	37.9	13.1	38.4	13.2	39.0	13.2	39.9	13.4	41.1	13.5
	35	30.3	11.4	35.5	14.3	36.6	14.5	37.1	14.6	37.5	14.6	38.5	14.7	39.6	14.9
	41	30.3	13.3	34.3	15.6	35.3	15.8	35.7	15.8	36.3	15.8	37.2	15.8	38.4	15.8
	43	30.3	14.3	33.5	15.8	34.4	15.9	35.0	16.0	35.6	16.1	36.5	16.20	37.5	16.50
120%	5	28.0	5.62	33.0	6.62	38.1	7.76	40.5	8.38	43.6	9.00	46.1	9.19	47.0	8.80
	10	28.0	5.72	33.0	6.86	38.1	8.03	40.5	8.61	43.0	9.19	44.8	9.13	45.7	8.76
	15	28.0	5.98	33.0	7.18	38.1	8.38	40.5	8.99	42.5	9.41	43.4	9.25	44.3	9.30
	20	28.0	6.26	33.0	7.73	38.1	9.48	40.5	10.42	41.1	10.47	41.9	10.56	42.8	10.66
	25	28.0	7.35	33.0	9.25	38.1	11.35	39.1	11.8	39.7	11.8	40.6	11.9	41.5	12.0
	30	28.0	8.71	33.0	10.97	37.2	13.0	37.8	13.1	38.4	13.2	39.1	13.3	40.0	13.4
	35	28.0	10.21	33.0	12.9	35.9	14.3	36.5	14.5	36.9	14.5	37.8	14.6	38.7	14.7
	41	28.0	11.9	33.0	14.7	34.5	15.8	35.0	15.8	35.6	15.8	36.5	15.8	37.4	15.8
	43	28.0	13.0	33.0	15.7	33.8	15.9	34.2	15.9	34.7	15.9	35.6	15.9	36.6	15.96
110%	5	25.6	5.10	30.3	6.03	34.8	7.04	37.1	7.63	39.4	8.22	45.4	9.48	46.4	9.15
	10	25.6	5.20	30.3	6.24	34.8	7.30	37.1	7.83	39.4	8.37	44.0	9.42	44.9	9.09
	15	25.6	5.45	30.3	6.52	34.8	7.63	37.1	8.18	39.4	8.73	42.5	9.38	43.4	9.23
	20	25.6	5.69	30.3	6.85	34.8	8.35	37.1	9.16	39.4	10.00	41.2	10.50	42.1	10.58
	25	25.6	6.55	30.3	8.19	34.8	10.00	37.1	10.97	38.4	11.7	39.3	11.8	40.2	11.9
	30	25.6	7.73	30.3	9.69	34.8	12.0	37.1	12.9	37.4	13.1	38.4	13.2	39.3	13.3
	35	25.6	9.07	30.3	11.40	34.8	13.1	35.7	14.3	36.2	14.5	37.1	14.6	37.9	14.7
	41	25.6	10.60	30.3	13.3	33.8	14.2	34.4	15.5	34.8	15.5	35.6	15.6	36.6	15.6
	43	25.6	11.5	30.3	14.5	32.9	15.3	33.6	15.6	34.1	15.6	34.8	15.8	35.7	15.8
100%	5	23.3	4.61	27.5	5.43	31.6	6.39	33.5	7.22	35.9	7.33	40.0	8.35	45.5	9.45
	10	23.3	4.70	27.5	5.62	31.6	6.56	33.5	7.04	35.9	7.53	40.0	8.50	44.0	9.41
	15	23.3	4.90	27.5	5.87	31.6	6.85	33.5	7.37	35.9	7.86	40.0	8.87	42.5	9.36
	20	23.3	5.13	27.5	6.14	31.6	7.30	33.5	7.99	35.9	8.71	40.0	10.23	41.2	10.50
	25	23.3	5.77	27.5	7.18	31.6	8.73	33.5	9.56	35.9	10.42	39.1	11.8	39.9	11.8
	30	23.3	6.82	27.5	8.42	31.6	10.34	33.5	11.17	35.9	12.4	37.7	13.1	38.4	13.2
	35	23.3	7.99	27.5	9.97	31.6	12.16	33.5	11.6	35.6	14.3	36.3	14.5	37.1	14.6
	41	23.3	9.33	27.5	11.6	31.6	14.17	33.5	14.7	34.2	15.3	35.0	15.6	35.7	15.3
	43	23.3	10.40	27.5	12.6	31.6	15.33	33.5	15.3	33.4	15.8	34.2	15.8	35.0	15.6

capacity factor %	outdoor temp.(℃ DB)	indoor temp.(℃ WB)													
		14(℃)		16(℃)		18(℃)		19(℃)		20(℃)		22(℃)		24(℃)	
		TC	PI	TC	PI	TC	PI	TC	PI	TC	PI	TC	PI	TC	PI
		KW	KW	KW	KW	KW	KW	KW	KW	KW	KW	KW	KW	KW	KW
90%	5	21.0	4.13	24.8	4.93	28.6	5.74	30.4	6.10	32.3	6.65	36.0	7.34	39.7	8.21
	10	21.0	4.21	24.8	5.02	28.6	5.84	30.4	6.27	32.3	6.71	36.0	7.57	39.7	8.44
	15	21.0	4.38	24.8	5.23	28.6	6.10	30.4	6.53	32.3	7.01	36.0	7.90	39.7	8.81
	20	21.0	4.58	24.8	5.48	28.6	6.39	30.4	6.89	32.3	7.50	36.0	8.77	39.7	10.13
	25	21.0	5.04	24.8	6.24	28.6	7.54	30.4	8.24	32.3	8.96	36.0	10.49	39.0	11.7
	30	21.0	5.95	24.8	7.37	28.6	8.93	30.4	9.75	32.3	10.62	36.0	12.4	37.7	13.1
	35	21.0	6.96	24.8	8.64	28.6	10.49	30.4	11.5	32.3	12.5	35.6	14.3	36.3	14.5
	41	21.0	8.02	24.8	10.07	28.6	12.2	30.4	13.4	32.3	14.3	34.2	15.6	34.7	15.6
	43	21.0	8.31	24.8	10.94	28.6	13.0	30.4	14.0	32.3	14.7	33.4	15.8	33.9	15.8
80%	5	18.6	3.67	22.0	4.35	25.3	5.06	27.1	5.48	28.6	5.72	32.0	6.47	35.4	7.01
	10	18.6	3.73	22.0	4.42	25.3	5.15	27.1	5.61	28.6	5.88	32.0	6.65	35.4	7.41
	15	18.6	3.87	22.0	4.61	25.3	5.38	27.1	5.75	28.6	6.14	32.0	6.95	35.4	7.74
	20	18.6	4.05	22.0	4.81	25.3	5.61	27.1	6.03	28.6	6.43	32.0	7.41	35.4	8.54
	25	18.6	4.35	22.0	5.35	25.3	6.43	27.1	7.01	28.6	7.60	32.0	8.87	35.4	10.21
	30	18.6	5.13	22.0	6.32	25.3	7.60	27.1	8.29	28.6	9.00	32.0	10.50	35.4	12.1
	35	18.6	6.01	22.0	7.40	25.3	8.93	27.1	9.74	28.6	10.58	32.0	12.4	35.4	14.3
	41	18.6	6.81	22.0	8.80	25.3	10.39	27.1	11.31	28.6	12.3	32.0	14.2	33.8	15.3
	43	18.6	7.25	22.0	8.80	25.3	11.23	27.1	12.0	28.6	12.9	32.0	14.7	32.2	15.6
70%	5	16.3	3.20	19.3	3.79	22.1	4.25	23.6	4.74	25.1	4.94	28.0	5.59	31.0	6.06
	10	16.3	3.25	19.3	3.85	22.1	4.45	23.6	4.77	25.1	5.09	28.0	5.74	31.0	6.40
	15	16.3	3.38	19.3	4.00	22.1	4.65	23.6	4.97	25.1	5.30	28.0	5.98	31.0	6.69
	20	16.3	3.53	19.3	4.18	22.1	4.86	23.6	5.20	25.1	5.55	28.0	6.27	31.0	7.07
	25	16.3	3.72	19.3	4.52	22.1	5.41	23.6	5.87	25.1	6.36	28.0	7.37	31.0	8.45
	30	16.3	4.38	19.3	5.32	22.1	6.39	23.6	6.94	25.1	7.51	28.0	8.73	31.0	10.01
	35	16.3	5.12	19.3	6.24	22.1	7.48	23.6	8.13	25.1	8.81	28.0	10.24	31.0	11.8
	41	16.3	5.82	19.3	7.25	22.1	8.74	23.6	9.49	25.1	10.26	28.0	11.9	31.0	13.8
	43	16.3	6.26	19.3	7.86	22.1	9.46	23.6	10.36	25.1	11.12	28.0	12.5	31.0	14.3
60%	5	13.9	2.76	16.5	3.25	19.0	3.72	20.3	4.02	21.6	4.22	24.0	4.58	26.5	5.07
	10	13.9	2.81	16.5	3.30	19.0	3.79	20.3	4.19	21.6	4.32	24.0	4.86	26.5	5.41
	15	13.9	2.92	16.5	3.43	19.0	3.95	20.3	4.22	21.6	4.51	24.0	5.06	26.5	5.64
	20	13.9	3.04	16.5	3.57	19.0	4.12	20.3	4.41	21.6	4.70	24.0	5.29	26.5	5.90
	25	13.9	3.17	16.5	3.76	19.0	4.45	20.3	4.83	21.6	5.20	24.0	6.00	26.5	6.84
	30	13.9	3.67	16.5	4.44	19.0	6.69	20.3	5.69	21.6	6.11	24.0	7.08	26.5	8.09
	35	13.9	4.28	16.5	5.17	19.0	6.16	20.3	6.66	21.6	7.20	24.0	8.31	26.5	9.49
	41	13.9	4.97	16.5	4.54	19.0	7.08	20.3	7.30	21.6	8.35	24.0	9.68	26.5	11.08
	43	13.9	5.41	16.5	4.97	19.0	7.37	20.3	8.00	21.6	9.07	24.0	10.55	26.5	11.31
50%	5	11.7	2.34	13.8	2.72	15.9	3.12	16.9	3.34	17.9	3.50	20.0	3.86	22.1	4.32
	10	11.7	2.37	13.8	2.76	15.9	3.17	16.9	3.37	17.9	3.57	20.0	4.00	22.1	4.44
	15	11.7	2.46	13.8	2.86	15.9	3.28	16.9	3.50	17.9	3.72	20.0	4.16	22.1	4.63
	20	11.7	2.56	13.8	2.98	15.9	3.43	16.9	3.66	17.9	3.89	20.0	4.35	22.1	4.84
	25	11.7	2.66	13.8	3.11	15.9	3.59	16.9	3.86	17.9	4.15	20.0	4.76	22.1	5.38
	30	11.7	3.02	13.8	3.60	15.9	4.22	16.9	4.55	17.9	4.90	20.0	5.59	22.1	6.36
	35	11.7	3.51	13.8	4.21	15.9	4.94	16.9	5.32	17.9	5.72	20.0	6.56	22.1	7.44
	41	11.7	4.09	13.8	4.87	15.9	5.71	16.9	6.14	17.9	6.65	20.0	7.85	22.1	8.76
	43	11.7	4.52	13.8	5.30	15.9	6.16	16.9	7.01	17.9	7.21	20.0	8.28	22.1	9.75

4) 14HP capacity

cooling

capacity factor %	outdoor temp.(℃ DB)	indoor temp.(℃ WB)													
		14(℃)		16(℃)		18(℃)		19(℃)		20(℃)		22(℃)		24(℃)	
		TC	PI	TC	PI	TC	PI	TC	PI	TC	PI	TC	PI	TC	PI
		KW	KW	KW	KW	KW	KW	KW	KW	KW	KW	KW	KW	KW	KW
130%	5	36.2	6.25	42.7	7.65	49.2	9.04	52.6	10.23	54.7	9.97	56.3	9.06	57.2	8.14
	10	36.2	6.59	42.7	8.03	49.2	9.49	52.6	10.22	53.1	10.03	54.3	9.56	55.6	9.09
	15	36.2	6.92	42.7	8.40	49.2	9.93	50.8	10.20	51.5	10.08	52.6	10.07	54.0	10.12
	20	36.2	7.30	42.7	9.37	48.7	11.43	49.2	11.49	49.7	11.54	51.0	11.66	52.2	11.77
	25	36.2	8.85	42.7	11.34	46.9	13.0	47.4	13.0	48.1	13.1	49.4	13.2	50.6	13.4
	30	36.2	10.50	42.7	13.6	45.3	14.6	45.8	14.6	46.5	14.6	47.6	14.7	49.0	15.3
	35	36.2	12.6	42.4	15.9	43.7	16.1	44.2	16.2	44.8	16.3	46.0	16.4	47.3	16.6
	41	36.2	14.2	41.0	17.0	42.1	17.2	42.7	17.3	43.4	17.4	44.4	17.8	45.8	18.0
	43	36.2	15.4	40.0	17.6	41.1	17.8	41.8	18.1	42.5	18.4	43.5	18.63	44.8	19.50
120%	5	33.4	5.82	39.4	6.94	45.5	7.80	48.3	8.85	52.0	9.62	55.0	9.75	56.1	9.02
	10	33.4	5.97	39.4	7.30	45.5	8.63	48.3	9.30	51.3	9.97	53.5	9.90	54.5	9.47
	15	33.4	6.27	39.4	7.65	45.5	9.07	48.3	9.75	50.8	10.23	51.9	10.05	52.9	9.92
	20	33.4	6.59	39.4	8.29	45.5	10.31	48.3	11.38	49.0	11.47	50.1	11.56	51.2	11.67
	25	33.4	7.86	39.4	10.05	45.5	12.46	46.7	12.9	47.4	13.0	48.5	13.1	49.6	13.2
	30	33.4	9.22	39.4	12.01	44.4	14.4	45.1	14.5	45.8	14.6	46.7	14.7	47.8	14.9
	35	33.4	11.17	39.4	14.3	42.8	16.0	43.5	16.1	44.1	16.1	45.1	16.3	46.2	16.5
	41	33.4	12.8	39.4	16.6	41.2	17.0	41.8	17.0	42.5	17.0	43.5	17.8	44.6	17.8
	43	33.4	13.7	39.4	17.4	40.4	17.6	40.9	17.8	41.4	18.1	42.5	18.5	43.7	18.72
110%	5	30.6	5.11	36.2	6.25	41.6	7.41	44.2	8.05	47.1	8.59	54.2	10.29	55.4	9.69
	10	30.6	5.37	36.2	6.57	41.6	7.78	44.2	8.40	47.1	9.02	52.6	10.23	53.6	9.86
	15	30.6	5.63	36.2	6.89	41.6	8.16	44.2	8.76	47.1	9.45	50.8	10.18	51.9	10.03
	20	30.6	5.93	36.2	7.26	41.6	9.02	44.2	9.93	47.1	10.91	49.2	11.49	50.3	11.58
	25	30.6	6.92	36.2	8.81	41.6	10.91	44.2	12.95	45.8	13.5	46.9	13.7	48.0	13.8
	30	30.6	8.31	36.2	10.55	41.6	13.1	44.2	14.3	44.6	14.5	45.8	14.6	46.9	14.7
	35	30.6	9.84	36.2	12.52	41.6	15.5	42.7	16.0	43.2	16.0	44.2	16.2	45.3	16.3
	41	30.6	11.41	36.2	14.6	40.4	17.3	41.1	17.3	41.6	17.2	42.5	17.6	43.7	18.0
	43	30.6	12.3	36.2	15.5	39.3	17.1	40.2	17.6	40.7	18.0	41.6	18.3	42.7	18.6
100%	5	27.8	4.75	32.8	5.58	37.7	6.70	40.0	7.15	42.8	7.65	47.8	8.72	54.3	10.29
	10	27.8	4.79	32.8	5.86	37.7	6.94	40.0	7.50	42.8	8.05	47.8	9.17	52.6	10.23
	15	27.8	5.01	32.8	6.14	37.7	7.28	40.0	7.86	42.8	8.44	47.8	9.62	50.8	10.18
	20	27.8	5.28	32.8	6.45	37.7	7.78	40.0	8.59	42.8	9.41	47.8	11.17	49.2	11.49
	25	27.8	6.02	32.8	7.65	37.7	9.45	40.0	10.40	42.8	11.39	46.7	12.9	47.6	13.0
	30	27.8	7.20	32.8	9.17	37.7	11.30	40.0	12.44	42.8	13.5	45.0	14.5	45.8	14.6
	35	27.8	8.59	32.8	10.89	37.7	13.41	40.0	14.5	42.5	15.9	43.4	16.1	44.2	16.2
	41	27.8	9.93	32.8	12.5	37.7	15.59	40.0	16.5	40.9	17.3	41.8	17.4	42.7	17.6
	43	27.8	10.89	32.8	13.5	37.7	16.54	40.0	17.1	39.8	17.6	40.9	17.9	41.8	18.3

MRVIII R22

Haier
cooling

capacity factor %	outdoor temp.(℃ DB)	indoor temp.(℃ WB)													
		14(℃)		16(℃)		18(℃)		19(℃)		20(℃)		22(℃)		24(℃)	
		TC	PI	TC	PI	TC	PI	TC	PI	TC	PI	TC	PI	TC	PI
		KW	KW	KW	KW	KW	KW	KW	KW	KW	KW	KW	KW	KW	KW
90%	5	25.1	3.99	29.6	4.90	34.2	5.84	36.3	6.29	38.6	6.74	43.0	7.73	47.4	8.68
	10	25.1	4.21	29.6	5.15	34.2	6.12	36.3	6.60	38.6	7.09	43.0	8.10	47.4	9.11
	15	25.1	4.43	29.6	5.39	34.2	6.40	36.3	6.92	38.6	7.45	43.0	8.48	47.4	9.54
	20	25.1	4.66	29.6	5.67	34.2	6.74	36.3	7.32	38.6	8.01	43.0	9.49	47.4	11.06
	25	25.1	5.18	29.6	6.57	34.2	8.06	36.3	8.87	38.6	9.71	43.0	11.49	46.5	12.9
	30	25.1	6.23	29.6	7.88	34.2	9.67	36.3	10.63	38.6	11.62	43.0	13.8	45.0	14.5
	35	25.1	7.41	29.6	9.34	34.2	11.47	36.3	12.6	38.6	13.8	42.5	15.9	43.4	16.0
	41	25.1	8.53	29.6	10.81	34.2	13.3	36.3	13.8	38.6	16.0	40.9	17.3	41.4	17.4
	43	25.1	9.50	29.6	11.49	34.2	14.3	36.3	15.3	38.6	16.3	39.8	16.8	40.5	17.9
80%	5	22.2	3.50	26.2	4.27	30.3	5.03	32.4	5.44	34.2	5.86	38.2	6.70	42.3	7.52
	10	22.2	3.67	26.2	4.47	30.3	5.29	32.4	5.73	34.2	6.16	38.2	7.03	42.3	7.91
	15	22.2	3.84	26.2	4.68	30.3	5.56	32.4	6.01	34.2	6.45	38.2	7.37	42.3	8.31
	20	22.2	4.04	26.2	4.92	30.3	5.84	32.4	6.31	34.2	6.79	38.2	7.91	42.3	9.60
	25	22.2	4.40	26.2	5.54	30.3	6.79	32.4	7.45	34.2	8.14	38.2	9.60	42.3	12.01
	30	22.2	5.29	26.2	6.66	30.3	8.14	32.4	8.94	34.2	9.75	38.2	11.49	42.3	13.4
	35	22.2	6.31	26.2	7.91	30.3	9.67	32.4	10.61	34.2	11.58	38.2	13.6	42.3	15.8
	41	22.2	7.43	26.2	9.11	30.3	11.17	32.4	12.29	34.2	13.5	38.2	15.8	40.4	17.3
	43	22.2	8.66	26.2	9.95	30.3	11.88	32.4	13.4	34.2	14.9	38.2	16.4	38.4	17.7
70%	5	19.5	2.97	23.0	3.61	26.4	4.28	28.1	4.62	29.9	5.00	33.5	5.71	37.0	4.57
	10	19.5	3.12	23.0	3.80	26.4	4.51	28.1	4.86	29.9	5.24	33.5	5.99	37.0	6.75
	15	19.5	3.27	23.0	3.99	26.4	4.73	28.1	5.11	29.9	5.48	33.5	6.27	37.0	7.07
	20	19.5	3.44	23.0	4.19	26.4	4.98	28.1	5.37	29.9	5.78	33.5	6.60	37.0	7.52
	25	19.5	3.65	23.0	4.58	26.4	5.59	28.1	6.14	29.9	6.70	33.5	7.88	37.0	9.11
	30	19.5	4.42	23.0	5.52	26.4	6.74	28.1	7.37	29.9	8.03	33.5	9.43	37.0	10.91
	35	19.5	5.28	23.0	6.57	26.4	7.99	28.1	8.76	29.9	9.52	33.5	11.19	37.0	12.9
	41	19.5	6.02	23.0	7.45	26.4	9.22	28.1	9.93	29.9	11.02	33.5	13.0	37.0	15.1
	43	19.5	6.40	23.0	7.84	26.4	10.25	28.1	11.08	29.9	11.92	33.5	14.1	37.0	16.5
60%	5	16.6	2.47	19.7	3.01	22.7	3.55	24.2	3.87	25.8	4.13	28.7	4.71	31.7	5.31
	10	16.6	2.60	19.7	3.16	22.7	3.74	24.2	4.04	25.8	4.34	28.7	4.96	31.7	5.59
	15	16.6	2.73	19.7	3.31	22.7	3.93	24.2	4.25	25.8	4.55	28.7	5.20	31.7	5.87
	20	16.6	2.86	19.7	3.48	22.7	4.12	24.2	4.45	25.8	4.79	28.7	5.48	31.7	6.17
	25	16.6	3.01	19.7	3.70	22.7	4.51	24.2	4.92	25.8	5.37	28.7	6.29	31.7	7.26
	30	16.6	3.59	19.7	4.49	22.7	5.44	24.2	5.93	25.8	6.45	28.7	7.54	31.7	8.70
	35	16.6	4.30	19.7	5.35	22.7	6.45	24.2	7.05	25.8	7.67	28.7	8.94	31.7	10.33
	41	16.6	4.90	19.7	6.08	22.7	7.41	24.2	8.10	25.8	8.83	28.7	10.35	31.7	11.97
	43	16.6	5.35	19.7	6.21	22.7	8.08	24.2	9.06	25.8	9.67	28.7	11.11	31.7	13.10
50%	5	13.9	2.00	16.5	2.47	18.9	2.86	20.2	3.03	21.4	3.29	23.9	3.80	26.4	4.27
	10	13.9	2.10	16.5	2.54	18.9	3.01	20.2	3.24	21.4	3.48	23.9	3.99	26.4	4.49
	15	13.9	2.19	16.5	2.62	18.9	3.16	20.2	3.41	21.4	3.67	23.9	4.17	26.4	4.71
	20	13.9	2.30	16.5	2.81	18.9	3.31	20.2	3.57	21.4	3.84	23.9	4.40	26.4	4.96
	25	13.9	2.43	16.5	2.94	18.9	3.50	20.2	3.82	21.4	4.15	23.9	4.85	26.4	5.58
	30	13.9	2.84	16.5	3.52	18.9	4.23	20.2	4.62	21.4	5.01	23.9	5.86	26.4	6.70
	35	13.9	3.42	16.5	4.21	18.9	5.07	20.2	5.50	21.4	5.97	23.9	6.94	26.4	7.95
	41	13.9	3.89	16.5	4.47	18.9	5.78	20.2	6.31	21.4	6.85	23.9	7.97	26.4	9.17
	43	13.9	4.34	16.5	4.92	18.9	6.34	20.2	6.87	21.4	7.41	23.9	8.70	26.4	10.01

5) 16HP capacity

cooling

capacity factor %	outdoor temp.(℃ DB)	indoor temp.(℃ WB)													
		14(℃)		16(℃)		18(℃)		19(℃)		20(℃)		22(℃)		24(℃)	
		TC	PI	TC	PI	TC	PI	TC	PI	TC	PI	TC	PI	TC	PI
		KW	KW	KW	KW	KW	KW	KW	KW	KW	KW	KW	KW	KW	KW
130%	5	40.7	7.11	48.1	8.71	55.4	10.28	59.1	11.65	61.5	11.35	63.3	10.30	64.6	9.26
	10	40.7	7.49	48.1	9.13	55.4	10.79	59.1	11.62	59.7	11.41	61.1	10.88	62.8	10.35
	15	40.7	7.88	48.1	9.56	55.4	11.31	57.1	11.60	57.9	11.48	59.1	11.45	61.0	11.52
	20	40.7	8.30	48.1	10.67	54.8	13.01	55.4	13.07	56.0	13.14	57.3	13.26	59.0	13.39
	25	40.7	10.07	48.1	12.90	52.8	14.8	53.4	14.8	54.2	14.9	55.6	15.1	57.2	15.2
	30	40.7	11.94	48.1	15.46	51.0	16.6	51.6	16.6	52.4	16.6	53.6	16.8	55.4	17.4
	35	40.7	14.3	47.7	18.1	49.2	18.3	49.8	18.4	50.4	18.5	51.8	18.7	53.4	18.9
	41	40.7	16.1	46.1	19.4	47.4	19.5	48.0	19.7	48.8	19.8	50.0	20.2	51.8	20.4
	43	40.7	17.5	45.0	20.0	46.2	20.3	47.0	20.6	47.8	20.9	49.0	21.20	50.6	21.50
120%	5	37.6	6.62	44.3	7.90	51.2	8.88	54.4	10.07	58.5	10.94	61.9	11.09	63.4	10.26
	10	37.6	6.79	44.3	8.30	51.2	9.81	54.4	10.58	57.7	11.35	60.1	11.26	61.6	10.77
	15	37.6	7.13	44.3	8.71	51.2	10.33	54.4	11.09	57.1	11.65	58.3	11.43	59.8	11.28
	20	37.6	7.49	44.3	9.43	51.2	11.73	54.4	12.94	55.2	13.05	56.3	13.16	57.8	13.29
	25	37.6	8.94	44.3	11.43	51.2	14.18	52.6	14.7	53.4	14.8	54.6	14.9	56.0	15.1
	30	37.6	10.50	44.3	13.67	50.0	16.4	50.8	16.5	51.6	16.6	52.6	16.7	54.0	16.9
	35	37.6	12.71	44.3	16.22	48.2	18.2	49.0	18.3	49.6	18.4	50.8	18.5	52.2	18.7
	41	37.6	14.5	44.3	18.9	46.4	19.4	47.0	19.4	47.8	19.4	49.0	20.2	50.4	20.2
	43	37.6	15.6	44.3	19.8	45.4	20.0	46.0	20.3	46.6	20.6	47.8	21.0	49.4	21.30
110%	5	34.4	5.81	40.7	7.11	46.8	8.43	49.8	9.15	53.0	9.77	60.9	11.71	62.6	11.03
	10	34.4	6.11	40.7	7.47	46.8	8.86	49.8	9.56	53.0	10.26	59.1	11.65	60.6	11.22
	15	34.4	6.41	40.7	7.83	46.8	9.28	49.8	9.96	53.0	10.75	57.1	11.58	58.6	11.41
	20	34.4	6.75	40.7	8.26	46.8	10.26	49.8	11.31	53.0	12.41	55.4	13.07	56.8	13.18
	25	34.4	7.88	40.7	10.03	46.8	12.41	49.8	14.73	51.6	15.4	52.8	15.5	54.2	15.7
	30	34.4	9.45	40.7	12.01	46.8	14.9	49.8	16.3	50.2	16.5	51.6	16.6	53.0	16.8
	35	34.4	11.20	40.7	14.24	46.8	17.6	48.0	18.2	48.6	18.2	49.8	18.4	51.2	18.6
	41	34.4	12.99	40.7	16.59	45.4	19.6	46.2	19.7	46.8	19.6	47.8	20.0	49.4	20.4
	43	34.4	14.1	40.7	17.7	44.2	19.5	45.2	20.0	45.8	20.5	46.8	20.8	48.2	21.2
100%	5	31.3	5.41	36.9	6.34	42.4	7.62	45.0	8.13	48.2	8.71	53.8	9.92	61.4	11.71
	10	31.3	5.45	36.9	6.66	42.4	7.90	45.0	8.54	48.2	9.15	53.8	10.43	59.4	11.65
	15	31.3	5.71	36.9	6.98	42.4	8.28	45.0	8.94	48.2	9.60	53.8	10.94	57.4	11.58
	20	31.3	6.00	36.9	7.35	42.4	8.86	45.0	9.77	48.2	10.71	53.8	12.71	55.6	13.07
	25	31.3	6.86	36.9	8.71	42.4	10.75	45.0	11.84	48.2	12.97	52.6	14.7	53.8	14.8
	30	31.3	8.20	36.9	10.43	42.4	12.86	45.0	14.16	48.2	15.4	50.6	16.5	51.8	16.6
	35	31.3	9.77	36.9	12.39	42.4	15.27	45.0	16.5	47.8	18.1	48.8	18.3	50.0	18.4
	41	31.3	11.31	36.9	14.26	42.4	17.73	45.0	18.7	46.0	19.7	47.0	19.8	48.2	20.0
	43	31.3	12.39	36.9	15.35	42.4	18.82	45.0	19.5	44.8	20.0	46.0	20.4	47.2	20.8

capacity factor %	outdoor temp.(℃ DB)	indoor temp.(℃ WB)													
		14(℃)		16(℃)		18(℃)		19(℃)		20(℃)		22(℃)		24(℃)	
		TC	PI	TC	PI	TC	PI	TC	PI	TC	PI	TC	PI	TC	PI
		KW	KW	KW	KW	KW	KW	KW	KW	KW	KW	KW	KW	KW	KW
90%	5	28.3	4.53	33.3	5.58	38.4	6.64	40.8	7.15	43.4	7.66	48.4	8.79	53.6	9.88
	10	28.3	4.79	33.3	5.85	38.4	6.96	40.8	7.52	43.4	8.07	48.4	9.22	53.6	10.37
	15	28.3	5.05	33.3	6.13	38.4	7.28	40.8	7.88	43.4	8.47	48.4	9.64	53.6	10.86
	20	28.3	5.30	33.3	6.45	38.4	7.66	40.8	8.32	43.4	9.11	48.4	10.79	53.6	12.58
	25	28.3	5.90	33.3	7.47	38.4	9.18	40.8	10.09	43.4	11.05	48.4	13.07	52.6	14.7
	30	28.3	7.09	33.3	8.96	38.4	11.01	40.8	12.09	43.4	13.22	48.4	15.7	50.8	16.5
	35	28.3	8.43	33.3	10.62	38.4	13.05	40.8	14.3	43.4	15.7	47.8	18.1	49.0	18.2
	41	28.3	9.71	33.3	12.31	38.4	15.2	40.8	15.6	43.4	18.2	46.0	19.7	46.8	19.8
	43	28.3	10.82	33.3	13.07	38.4	16.2	40.8	17.5	43.4	18.6	44.8	19.1	45.8	20.4
80%	5	25.0	3.98	29.5	4.85	34.0	5.73	36.4	6.20	38.4	6.66	43.0	7.62	47.8	8.56
	10	25.0	4.17	29.5	5.09	34.0	6.03	36.4	6.51	38.4	7.00	43.0	8.01	47.8	9.01
	15	25.0	4.36	29.5	5.32	34.0	6.32	36.4	6.83	38.4	7.35	43.0	8.39	47.8	9.45
	20	25.0	4.60	29.5	5.60	34.0	6.64	36.4	7.17	38.4	7.73	43.0	9.01	47.8	10.92
	25	25.0	5.00	29.5	6.30	34.0	7.73	36.4	8.47	38.4	9.26	43.0	10.92	47.8	13.67
	30	25.0	6.03	29.5	7.58	34.0	9.26	36.4	10.18	38.4	11.09	43.0	13.07	47.8	15.2
	35	25.0	7.17	29.5	9.01	34.0	11.01	36.4	12.07	38.4	13.18	43.0	15.5	47.8	18.0
	41	25.0	8.45	29.5	10.37	34.0	12.71	36.4	13.99	38.4	15.4	43.0	18.0	45.6	19.6
	43	25.0	9.86	29.5	11.33	34.0	13.52	36.4	15.3	38.4	16.9	43.0	18.7	43.4	20.1
70%	5	22.0	3.39	25.9	4.11	29.7	4.88	31.7	5.26	33.7	5.68	37.6	6.49	41.8	5.19
	10	22.0	3.56	25.9	4.32	29.7	5.13	31.7	5.54	33.7	5.96	37.6	6.81	41.8	7.69
	15	22.0	3.73	25.9	4.53	29.7	5.39	31.7	5.81	33.7	6.24	37.6	7.13	41.8	8.05
	20	22.0	3.92	25.9	4.77	29.7	5.66	31.7	6.11	33.7	6.58	37.6	7.52	41.8	8.56
	25	22.0	4.15	25.9	5.22	29.7	6.37	31.7	6.98	33.7	7.62	37.6	8.96	41.8	10.37
	30	22.0	5.02	25.9	6.28	29.7	7.66	31.7	8.39	33.7	9.13	37.6	10.73	41.8	12.41
	35	22.0	6.00	25.9	7.47	29.7	9.09	31.7	9.96	33.7	10.84	37.6	12.73	41.8	14.7
	41	22.0	6.86	25.9	8.47	29.7	10.50	31.7	11.31	33.7	12.54	37.6	14.8	41.8	17.1
	43	22.0	7.28	25.9	8.92	29.7	11.67	31.7	12.61	33.7	13.56	37.6	16.1	41.8	18.7
60%	5	18.7	2.81	22.1	3.43	25.5	4.05	27.3	4.41	29.1	4.71	32.3	5.37	35.8	6.05
	10	18.7	2.96	22.1	3.60	25.5	4.26	27.3	4.60	29.1	4.94	32.3	5.64	35.8	6.37
	15	18.7	3.11	22.1	3.77	25.5	4.47	27.3	4.83	29.1	5.17	32.3	5.92	35.8	6.69
	20	18.7	3.26	22.1	3.96	25.5	4.68	27.3	5.07	29.1	5.45	32.3	6.24	35.8	7.03
	25	18.7	3.43	22.1	4.22	25.5	5.13	27.3	5.60	29.1	6.11	32.3	7.15	35.8	8.26
	30	18.7	4.09	22.1	5.11	25.5	6.20	27.3	6.75	29.1	7.35	32.3	8.58	35.8	9.90
	35	18.7	4.90	22.1	6.09	25.5	7.35	27.3	8.03	29.1	8.73	32.3	10.18	35.8	11.75
	41	18.7	5.58	22.1	6.92	25.5	8.43	27.3	9.22	29.1	10.05	32.3	11.77	35.8	13.63
	43	18.7	6.09	22.1	7.07	25.5	9.20	27.3	10.30	29.1	11.01	32.3	12.65	35.8	14.90
50%	5	15.7	2.28	18.5	2.81	21.3	3.26	22.7	3.45	24.1	3.75	26.9	4.32	29.8	4.85
	10	15.7	2.38	18.5	2.90	21.3	3.43	22.7	3.68	24.1	3.96	26.9	4.53	29.8	5.11
	15	15.7	2.49	18.5	2.98	21.3	3.60	22.7	3.87	24.1	4.17	26.9	4.75	29.8	5.37
	20	15.7	2.62	18.5	3.19	21.3	3.77	22.7	4.07	24.1	4.36	26.9	5.00	29.8	5.64
	25	15.7	2.77	18.5	3.34	21.3	3.98	22.7	4.34	24.1	4.73	26.9	5.51	29.8	6.34
	30	15.7	3.24	18.5	4.00	21.3	4.81	22.7	5.26	24.1	5.71	26.9	6.66	29.8	7.62
	35	15.7	3.90	18.5	4.79	21.3	5.77	22.7	6.26	24.1	6.79	26.9	7.90	29.8	9.05
	41	15.7	4.43	18.5	5.09	21.3	6.58	22.7	7.17	24.1	7.79	26.9	9.07	29.8	10.43
	43	15.7	4.94	18.5	5.60	21.3	7.22	22.7	7.81	24.1	8.43	26.9	9.90	29.8	11.39

6) 18HP capacity

cooling

capacity factor %	outdoor temp.(℃ DB)	indoor temp.(℃ WB)													
		14(℃)		16(℃)		18(℃)		19(℃)		20(℃)		22(℃)		24(℃)	
		TC	PI	TC	PI	TC	PI	TC	PI	TC	PI	TC	PI	TC	PI
		KW	KW	KW	KW	KW	KW	KW	KW	KW	KW	KW	KW	KW	KW
130%	5	45.6	8.8	53.8	10.6	62.0	12.2	65.9	13.7	68.3	13.5	69.9	12.2	71.4	11.6
	10	45.6	9.1	53.8	10.9	62.0	12.2	66.3	13.6	66.9	13.4	68.5	12.8	70.0	12.2
	15	45.6	9.5	53.8	11.4	62.0	12.2	64.6	13.6	65.3	13.5	66.3	13.5	68.0	13.6
	20	45.6	9.9	53.8	12.6	62.0	12.2	62.6	15.3	62.7	15.3	64.3	15.5	65.8	15.6
	25	45.6	11.9	53.8	15.1	62.0	12.2	60.4	17.2	60.7	17.3	62.3	17.5	63.7	17.6
	30	45.6	14.1	53.8	17.2	62.0	12.2	57.7	19.2	58.6	19.3	59.1	19.4	61.6	19.8
	35	45.6	16.6	53.4	20.8	62.0	12.2	55.7	21.2	56.5	21.3	58.1	21.5	59.5	21.7
	41	45.6	19.2	52.3	22.6	62.0	12.2	53.8	22.9	54.5	23.0	56.1	23.2	57.3	23.3
	43	45.6	20.7	51.3	23.3	62.0	12.2	52.7	24.5	53.3	24.6	55.0	24.8	55.8	25.0
120%	5	42.3	8.1	49.6	9.6	62.0	12.2	61.0	12.1	65.1	13.0	68.7	13.2	70.1	12.5
	10	42.3	8.3	49.6	9.9	62.0	12.2	61.0	12.5	64.7	13.3	67.4	13.3	68.7	12.7
	15	42.3	8.7	49.6	10.4	62.0	12.2	61.0	13.1	63.9	13.7	65.2	13.4	66.6	13.4
	20	42.3	9.1	49.6	11.2	62.0	12.2	61.0	15.1	61.8	15.2	63.1	15.4	64.5	15.5
	25	42.3	10.7	49.6	13.4	62.0	12.2	59.0	17.1	59.8	17.2	61.2	17.3	62.4	17.5
	30	42.3	12.5	49.6	15.9	62.0	12.2	56.8	19.1	57.6	19.2	58.8	19.3	60.3	19.5
	35	42.3	14.8	49.6	18.8	62.0	12.2	54.8	21.0	55.5	21.1	56.9	21.3	58.2	21.5
	41	42.3	17.2	49.6	21.7	62.0	12.2	52.8	22.8	53.6	22.8	54.5	23.2	55.9	23.2
	43	42.3	18.7	49.6	23.8	62.0	12.2	51.7	24.3	52.3	24.4	53.2	24.7	54.9	24.9
110%	5	38.8	7.3	45.5	8.7	62.0	12.2	55.9	11.0	59.3	11.8	67.6	13.8	69.0	13.2
	10	38.8	7.5	45.5	9.0	62.0	12.2	55.9	11.4	59.3	12.1	66.2	13.7	67.5	13.2
	15	38.8	7.9	45.5	9.4	62.0	12.2	55.9	11.8	59.3	12.7	64.0	13.6	65.4	13.4
	20	38.8	8.2	45.5	9.9	62.0	12.2	55.9	13.3	59.3	14.5	62.0	15.3	63.3	15.4
	25	38.8	9.5	45.5	11.9	62.0	12.2	55.9	16.4	58.2	17.4	59.5	17.5	60.8	17.7
	30	38.8	11.2	45.5	14.1	62.0	12.2	55.9	18.8	56.1	19.0	57.8	19.2	59.1	19.4
	35	38.8	13.2	45.5	16.6	62.0	12.2	53.8	20.9	54.5	21.0	55.7	21.2	57.0	21.4
	41	38.8	15.4	45.5	19.4	62.0	12.2	51.9	22.7	52.5	22.6	53.3	22.9	54.9	23.1
	43	38.8	16.6	45.5	20.9	62.0	12.2	50.8	23.6	51.3	23.2	52.1	23.6	53.6	23.8
100%	5	35.1	6.7	41.3	7.8	62.0	12.2	50.6	10.2	53.9	10.5	60.2	12.0	69.0	13.7
	10	35.1	6.8	41.3	8.1	62.0	12.2	50.6	10.2	53.9	10.9	60.2	12.3	67.4	13.7
	15	35.1	7.1	41.3	8.5	62.0	12.2	50.6	10.7	53.9	11.4	60.2	12.9	65.7	13.6
	20	35.1	7.4	41.3	8.9	62.0	12.2	50.6	11.6	53.9	12.6	60.2	14.9	64.2	15.3
	25	35.1	8.3	41.3	10.4	62.0	12.2	50.6	13.9	53.9	15.1	58.8	17.1	62.0	17.2
	30	35.1	9.9	41.3	12.3	62.0	12.2	50.6	16.3	53.9	17.9	56.6	19.1	59.4	19.2
	35	35.1	11.6	41.3	14.5	62.0	12.2	50.6	17.8	53.5	20.8	54.6	21.0	56.9	21.2
	41	35.1	13.5	41.3	16.9	62.0	12.2	50.6	21.6	51.5	22.5	52.6	22.8	53.7	22.7
	43	35.1	15.0	41.3	18.2	62.0	12.2	50.6	23.0	50.2	23.4	51.6	23.5	52.5	23.4

MRVIII R22

Haier
cooling

capacity factor %	outdoor temp.(℃ DB)	indoor temp.(℃ WB)													
		14(℃)		16(℃)		18(℃)		19(℃)		20(℃)		22(℃)		24(℃)	
		TC	PI	TC	PI	TC	PI	TC	PI	TC	PI	TC	PI	TC	PI
		KW	KW	KW	KW	KW	KW	KW	KW	KW	KW	KW	KW	KW	KW
90%	5	31.8	5.9	37.3	7.0	62.0	12.2	45.8	8.8	48.7	9.5	54.2	10.6	59.8	11.8
	10	31.8	6.1	37.3	7.2	62.0	12.2	45.8	9.1	48.7	9.7	54.2	11.0	59.8	12.2
	15	31.8	6.3	37.3	7.6	62.0	12.2	45.8	9.5	48.7	10.2	54.2	11.5	59.8	12.8
	20	31.8	6.6	37.3	7.9	62.0	12.2	45.8	10.0	48.7	10.9	54.2	12.7	59.8	14.7
	25	31.8	7.3	37.3	9.0	62.0	12.2	45.8	11.9	48.7	13.0	54.2	15.3	58.7	17.1
	30	31.8	8.6	37.3	10.7	62.0	12.2	45.8	14.2	48.7	15.4	54.2	18.1	56.7	19.0
	35	31.8	10.1	37.3	12.5	62.0	12.2	45.8	16.7	48.7	18.2	53.5	20.9	54.6	21.0
	41	31.8	11.7	37.3	14.6	62.0	12.2	45.8	19.0	48.7	21.0	51.3	22.8	52.4	22.8
	43	31.8	12.4	37.3	15.7	62.0	12.2	45.8	20.4	48.7	22.1	49.5	23.3	51.3	23.5
80%	5	28.4	5.2	33.0	6.2	62.0	12.2	40.8	7.8	43.1	8.2	48.2	9.3	53.2	10.2
	10	28.4	5.4	33.0	6.4	62.0	12.2	40.8	8.0	43.1	8.5	48.2	9.6	53.2	10.7
	15	28.4	5.6	33.0	6.6	62.0	12.2	40.8	8.3	43.1	8.9	48.2	10.1	53.2	11.2
	20	28.4	5.8	33.0	6.9	62.0	12.2	40.8	8.7	43.1	9.3	48.2	10.7	53.2	12.6
	25	28.4	6.3	33.0	7.7	62.0	12.2	40.8	10.2	43.1	11.0	48.2	12.9	53.2	15.3
	30	28.4	7.4	33.0	9.1	62.0	12.2	40.8	12.0	43.1	13.1	48.2	15.3	53.2	17.6
	35	28.4	8.7	33.0	10.7	62.0	12.2	40.8	14.1	43.1	15.4	48.2	18.0	53.2	20.8
	41	28.4	10.1	33.0	12.7	62.0	12.2	40.8	16.5	43.1	17.9	47.7	20.8	50.9	22.5
	43	28.4	11.1	33.0	13.1	62.0	12.2	40.8	17.7	43.1	19.2	46.5	21.6	49.2	23.3
70%	5	24.6	4.5	29.2	5.4	62.0	12.2	35.5	6.7	37.7	7.1	42.1	8.0	46.6	7.8
	10	24.6	4.7	29.2	5.5	62.0	12.2	35.5	6.9	37.7	7.3	42.1	8.3	46.6	9.3
	15	24.6	4.9	29.2	5.8	62.0	12.2	35.5	7.2	37.7	7.7	42.1	8.7	46.6	9.7
	20	24.6	5.1	29.2	6.0	62.0	12.2	35.5	7.5	37.7	8.0	42.1	9.1	46.6	10.2
	25	24.6	5.3	29.2	6.5	62.0	12.2	35.5	8.5	37.7	9.2	42.1	10.7	46.6	12.3
	30	24.6	6.3	29.2	7.7	62.0	12.2	35.5	10.0	37.7	10.9	42.1	12.7	46.6	14.5
	35	24.6	7.4	29.2	9.0	62.0	12.2	35.5	11.8	37.7	12.8	42.1	14.9	46.6	17.1
	41	24.6	8.5	29.2	10.5	62.0	12.2	35.5	13.7	37.7	14.9	42.1	17.3	46.6	20.0
	43	24.6	9.1	29.2	11.2	62.0	12.2	35.5	14.6	37.7	16.1	40.9	18.4	46.0	21.2
60%	5	21.2	3.9	24.9	4.6	62.0	12.2	30.5	5.7	32.4	6.0	36.1	6.6	39.9	7.4
	10	21.2	4.0	24.9	4.7	62.0	12.2	30.5	6.0	32.4	6.2	36.1	7.0	39.9	7.8
	15	21.2	4.2	24.9	4.9	62.0	12.2	30.5	6.1	32.4	6.5	36.1	7.3	39.9	8.2
	20	21.2	4.3	24.9	5.1	62.0	12.2	30.5	6.4	32.4	6.8	36.1	7.6	39.9	8.5
	25	21.2	4.5	24.9	5.4	62.0	12.2	30.5	7.0	32.4	7.5	36.1	8.7	39.9	9.9
	30	21.2	5.3	24.9	6.4	62.0	12.2	30.5	8.2	32.4	8.9	36.1	10.3	39.9	11.7
	35	21.2	6.2	24.9	7.5	62.0	12.2	30.5	9.6	32.4	10.4	36.1	12.0	39.9	13.8
	41	21.2	7.2	24.9	7.4	62.0	12.2	30.5	10.8	32.4	12.1	36.1	14.1	39.9	16.1
	43	21.2	7.8	24.9	7.9	62.0	12.2	30.5	12.0	32.4	13.2	36.1	15.2	39.9	16.9
50%	5	17.6	3.3	20.8	3.9	62.0	12.2	25.4	4.7	26.9	5.0	30.1	5.5	33.2	6.2
	10	17.6	3.4	20.8	3.9	62.0	12.2	25.4	4.8	26.9	5.1	30.1	5.8	33.2	6.4
	15	17.6	3.5	20.8	4.1	62.0	12.2	25.4	5.0	26.9	5.3	30.1	6.0	33.2	6.7
	20	17.6	3.6	20.8	4.3	62.0	12.2	25.4	5.3	26.9	5.6	30.1	6.3	33.2	7.0
	25	17.6	3.8	20.8	4.4	62.0	12.2	25.4	5.6	26.9	6.0	30.1	6.9	33.2	7.8
	30	17.6	4.3	20.8	5.2	62.0	12.2	25.4	6.6	26.9	7.1	30.1	8.1	33.2	9.2
	35	17.6	5.0	20.8	6.1	62.0	12.2	25.4	7.7	26.9	8.3	30.1	9.5	33.2	10.8
	41	17.6	5.9	20.8	6.9	62.0	12.2	25.4	8.9	26.9	9.6	30.1	11.2	33.2	12.6
	43	17.6	6.5	20.8	7.5	62.0	12.2	25.4	9.9	26.9	10.4	30.1	12.0	33.2	13.9

7) 20HP capacity

cooling

capacity factor %	outdoor temp.(℃ DB)	indoor temp.(℃ WB)													
		14(℃)		16(℃)		18(℃)		19(℃)		20(℃)		22(℃)		24(℃)	
		TC	PI	TC	PI	TC	PI	TC	PI	TC	PI	TC	PI	TC	PI
		KW	KW	KW	KW	KW	KW	KW	KW	KW	KW	KW	KW	KW	KW
130%	5	50.40	10.40	59.40	12.45	68.40	14.33	72.4	15.92	74.80	15.77	76.20	14.31	78.20	14.01
	10	50.40	10.57	59.40	12.67	68.40	14.82	73.2	15.87	73.80	15.60	75.60	14.92	77.20	14.23
	15	50.40	11.04	59.40	13.23	68.40	15.45	71.8	15.84	72.40	15.70	73.20	15.79	75.00	15.82
	20	50.40	11.60	59.40	14.65	67.60	17.65	69.6	17.72	69.20	17.82	71.00	17.97	72.60	18.14
	25	50.40	13.87	59.40	17.53	65.60	19.89	67.2	19.99	67.00	20.09	68.80	20.28	70.20	20.48
	30	50.40	16.43	59.40	19.43	63.00	22.16	63.6	22.28	64.60	22.38	64.40	22.63	67.80	22.85
	35	50.40	19.30	58.80	24.19	61.60	24.43	61.4	24.68	62.40	24.68	64.20	24.92	65.60	25.16
	41	50.40	22.46	58.40	26.30	58.40	26.63	59.4	26.63	60.00	26.63	62.00	26.63	62.80	26.78
	43	50.40	24.19	57.40	26.70	57.20	26.70	58.2	26.87	58.60	26.87	60.80	26.94	61.00	27.00
120%	5	46.80	9.50	54.80	11.18	63.20	13.11	67.4	14.16	71.40	15.21	75.20	15.53	76.80	14.87
	10	46.80	9.67	54.80	11.60	63.20	13.57	67.4	14.55	71.40	15.53	74.40	15.43	75.80	14.79
	15	46.80	10.11	54.80	12.13	63.20	14.16	67.4	15.18	70.40	15.89	71.80	15.62	73.40	15.72
	20	46.80	10.57	54.80	13.06	63.20	16.01	67.4	17.60	68.20	17.70	69.60	17.84	71.20	18.01
	25	46.80	12.43	54.80	15.62	63.20	19.19	65.2	19.87	66.00	19.97	67.60	20.14	68.80	20.31
	30	46.80	14.72	54.80	18.53	61.60	22.02	62.6	22.21	63.40	22.30	64.80	22.46	66.60	22.65
	35	46.80	17.26	54.80	21.80	60.40	24.19	60.4	24.43	61.20	24.43	62.80	24.68	64.20	24.92
	41	46.80	20.10	54.80	24.92	57.20	26.63	58.4	26.63	59.20	26.63	59.80	26.63	61.40	26.63
	43	46.80	22.02	54.80	26.50	56.00	26.87	57.2	26.87	57.80	26.87	58.40	26.87	60.40	26.96
110%	5	43.00	8.62	50.20	10.18	58.00	11.89	61.8	12.89	65.40	13.89	74.00	16.01	75.40	15.45
	10	43.00	8.79	50.20	10.55	58.00	12.33	61.8	13.23	65.40	14.14	73.00	15.92	74.40	15.36
	15	43.00	9.21	50.20	11.01	58.00	12.89	61.8	13.82	65.40	14.75	70.60	15.84	72.20	15.60
	20	43.00	9.62	50.20	11.57	58.00	14.11	61.8	15.48	65.40	16.89	68.40	17.75	69.80	17.87
	25	43.00	11.06	50.20	13.84	58.00	16.89	61.8	18.53	64.60	19.84	66.00	19.99	67.40	20.16
	30	43.00	13.06	50.20	16.38	58.00	20.28	61.8	21.87	61.80	22.09	63.80	22.33	65.20	22.48
	35	43.00	15.33	50.20	19.26	58.00	22.11	59.4	24.19	60.20	24.43	61.40	24.68	62.80	24.92
	41	43.00	17.92	50.20	22.50	56.60	23.94	57.4	26.14	58.00	26.14	58.60	26.38	60.40	26.38
	43	43.00	19.36	50.20	24.43	55.20	25.90	56.2	26.38	56.60	26.38	57.20	26.63	59.00	26.63
100%	5	38.80	7.79	45.60	9.18	52.60	10.79	56	12.21	59.40	12.38	66.40	14.11	76.60	15.97
	10	38.80	7.94	45.60	9.50	52.60	11.09	56	11.89	59.40	12.72	66.40	14.35	75.40	15.89
	15	38.80	8.28	45.60	9.91	52.60	11.57	56	12.45	59.40	13.28	66.40	14.99	74.00	15.82
	20	38.80	8.67	45.60	10.38	52.60	12.33	56	13.50	59.40	14.72	66.40	17.28	72.80	17.75
	25	38.80	9.74	45.60	12.13	52.60	14.75	56	16.16	59.40	17.60	64.80	19.87	70.20	20.02
	30	38.80	11.52	45.60	14.23	52.60	17.48	56	18.87	59.40	20.87	62.40	22.21	67.00	22.28
	35	38.80	13.50	45.60	16.84	52.60	20.55	56	19.60	59.00	24.19	60.20	24.43	63.80	24.68
	41	38.80	15.77	45.60	19.65	52.60	23.94	56	24.92	56.80	25.90	58.00	26.38	59.20	25.90
	43	38.80	17.58	45.60	21.28	52.60	25.90	56	25.90	55.40	26.63	57.00	26.63	57.80	26.38

capacity factor %	outdoor temp.(℃ DB)	indoor temp.(℃ WB)													
		14(℃)		16(℃)		18(℃)		19(℃)		20(℃)		22(℃)		24(℃)	
		TC	PI	TC	PI	TC	PI	TC	PI	TC	PI	TC	PI	TC	PI
		KW	KW	KW	KW	KW	KW	KW	KW	KW	KW	KW	KW	KW	KW
90%	5	35.20	6.99	41.20	8.33	47.40	9.69	50.6	10.30	53.80	11.23	59.80	12.40	66.00	13.87
	10	35.20	7.11	41.20	8.47	47.40	9.87	50.6	10.60	53.80	11.33	59.80	12.79	66.00	14.26
	15	35.20	7.40	41.20	8.84	47.40	10.30	50.6	11.04	53.80	11.84	59.80	13.35	66.00	14.89
	20	35.20	7.74	41.20	9.26	47.40	10.79	50.6	11.65	53.80	12.67	59.80	14.82	66.00	17.11
	25	35.20	8.52	41.20	10.55	47.40	12.74	50.6	13.92	53.80	15.14	59.80	17.72	64.80	19.84
	30	35.20	10.06	41.20	12.45	47.40	15.09	50.6	16.48	53.80	17.94	59.80	21.02	62.60	22.09
	35	35.20	11.77	41.20	14.60	47.40	17.72	50.6	19.38	53.80	21.11	59.00	24.19	60.20	24.43
	41	35.20	13.55	41.20	17.01	47.40	20.58	50.6	22.63	53.80	24.19	56.40	26.38	58.00	26.38
	43	35.20	14.04	41.20	18.48	47.40	22.04	50.6	23.70	53.80	24.92	54.00	26.63	56.80	26.63
80%	5	31.60	6.21	36.40	7.35	42.40	8.55	45	9.26	47.60	9.67	53.20	10.94	58.60	11.84
	10	31.60	6.30	36.40	7.47	42.40	8.69	45	9.47	47.60	9.94	53.20	11.23	58.60	12.52
	15	31.60	6.55	36.40	7.79	42.40	9.08	45	9.72	47.60	10.38	53.20	11.74	58.60	13.09
	20	31.60	6.84	36.40	8.13	42.40	9.47	45	10.18	47.60	10.87	53.20	12.52	58.60	14.43
	25	31.60	7.35	36.40	9.04	42.40	10.87	45	11.84	47.60	12.84	53.20	14.99	58.60	17.26
	30	31.60	8.67	36.40	10.67	42.40	12.84	45	14.01	47.60	15.21	53.20	17.75	58.60	20.48
	35	31.60	10.16	36.40	12.50	42.40	15.09	45	16.45	47.60	17.87	53.20	20.87	58.60	24.19
	41	31.60	11.50	36.40	14.87	42.40	17.55	45	19.11	47.60	20.75	52.20	23.94	56.20	25.90
	43	31.60	12.26	36.40	14.87	42.40	18.97	45	20.31	47.60	21.72	49.80	24.92	55.00	26.38
70%	5	27.20	5.40	32.40	6.40	37.20	7.18	39.2	8.01	41.60	8.35	46.40	9.45	51.40	10.23
	10	27.20	5.50	32.40	6.50	37.20	7.52	39.2	8.06	41.60	8.60	46.40	9.69	51.40	10.82
	15	27.20	5.72	32.40	6.77	37.20	7.86	39.2	8.40	41.60	8.96	46.40	10.11	51.40	11.30
	20	27.20	5.96	32.40	7.06	37.20	8.21	39.2	8.79	41.60	9.38	46.40	10.60	51.40	11.94
	25	27.20	6.28	32.40	7.64	37.20	9.13	39.2	9.91	41.60	10.74	46.40	12.45	51.40	14.28
	30	27.20	7.40	32.40	8.99	37.20	10.79	39.2	11.72	41.60	12.70	46.40	14.75	51.40	16.92
	35	27.20	8.65	32.40	10.55	37.20	12.65	39.2	13.74	41.60	14.89	46.40	17.31	51.40	19.87
	41	27.20	9.84	32.40	12.26	37.20	14.77	39.2	16.04	41.60	17.33	46.40	20.09	51.40	23.29
	43	27.20	10.57	32.40	13.28	37.20	15.99	39.2	17.50	41.60	18.80	44.00	21.06	50.20	24.19
60%	5	23.60	4.67	27.60	5.50	31.80	6.28	33.6	6.79	35.60	7.13	39.80	7.74	44.00	8.57
	10	23.60	4.74	27.60	5.57	31.80	6.40	33.6	7.08	35.60	7.30	39.80	8.21	44.00	9.13
	15	23.60	4.94	27.60	5.79	31.80	6.67	33.6	7.13	35.60	7.62	39.80	8.55	44.00	9.52
	20	23.60	5.13	27.60	6.03	31.80	6.96	33.6	7.45	35.60	7.94	39.80	8.94	44.00	9.96
	25	23.60	5.35	27.60	6.35	31.80	7.52	33.6	8.16	35.60	8.79	39.80	10.13	44.00	11.55
	30	23.60	6.21	27.60	7.50	31.80	11.30	33.6	9.62	35.60	10.33	39.80	11.96	44.00	13.67
	35	23.60	7.23	27.60	8.74	31.80	10.40	33.6	11.26	35.60	12.16	39.80	14.04	44.00	16.04
	41	23.60	8.40	27.60	7.67	31.80	11.96	33.6	12.33	35.60	14.11	39.80	16.36	44.00	18.72
	43	23.60	9.13	27.60	8.40	31.80	12.45	33.6	13.53	35.60	15.33	39.80	17.82	44.00	19.11
50%	5	19.52	3.96	23.00	4.59	26.40	5.28	28	5.64	29.60	5.91	33.20	6.52	36.60	7.30
	10	19.52	4.01	23.00	4.67	26.40	5.35	28	5.69	29.60	6.03	33.20	6.77	36.60	7.50
	15	19.52	4.16	23.00	4.84	26.40	5.55	28	5.91	29.60	6.28	33.20	7.03	36.60	7.82
	20	19.52	4.33	23.00	5.03	26.40	5.79	28	6.18	29.60	6.57	33.20	7.35	36.60	8.18
	25	19.52	4.50	23.00	5.25	26.40	6.06	28	6.52	29.60	7.01	33.20	8.04	36.60	9.08
	30	19.52	5.11	23.00	6.08	26.40	7.13	28	7.69	29.60	8.28	33.20	9.45	36.60	10.74
	35	19.52	5.94	23.00	7.11	26.40	8.35	28	8.99	29.60	9.67	33.20	11.09	36.60	12.57
	41	19.52	6.91	23.00	8.23	26.40	9.65	28	10.38	29.60	11.23	33.20	13.26	36.60	14.79
	43	19.52	7.64	23.00	8.96	26.40	10.40	28	11.84	29.60	12.18	33.20	13.99	36.60	16.48

8) 22HP capacity

cooling

capacity factor %	outdoor temp.(℃ DB)	indoor temp.(℃ WB)													
		14(℃)		16(℃)		18(℃)		19(℃)		20(℃)		22(℃)		24(℃)	
		TC	PI	TC	PI	TC	PI	TC	PI	TC	PI	TC	PI	TC	PI
		KW	KW	KW	KW	KW	KW	KW	KW	KW	KW	KW	KW	KW	KW
130%	5	55.5	11.36	65.48	13.60	75.41	15.65	80.22	17.38	83.20	17.22	85.24	15.62	86.98	15.30
	10	55.5	11.54	65.48	13.83	75.41	16.18	80.62	17.32	81.37	17.03	83.31	16.29	85.14	15.54
	15	55.5	12.05	65.48	14.45	75.41	16.87	78.44	17.30	79.33	17.14	80.62	17.24	82.71	17.27
	20	55.5	12.66	65.48	15.99	74.56	19.27	76.01	19.35	76.25	19.46	78.19	19.62	80.03	19.80
	25	55.5	15.14	65.48	19.14	72.08	21.72	73.33	21.83	73.82	21.93	75.76	22.15	77.49	22.36
	30	55.5	17.94	65.48	21.21	69.45	24.20	70.19	24.33	71.28	24.44	72.07	24.70	74.96	24.94
	35	55.5	21.07	64.91	26.41	67.41	26.68	67.76	26.94	68.70	26.94	70.64	27.21	72.38	27.47
	41	55.5	24.52	63.50	28.72	64.48	29.07	65.42	29.07	66.32	29.07	68.21	29.07	69.79	29.24
	43	55.5	26.41	62.20	29.15	62.99	29.25	64.08	29.44	64.88	29.54	66.86	29.67	68.00	30.00
120%	5	51.4	10.37	60.36	12.21	69.70	14.31	74.17	15.46	79.28	16.61	83.70	16.95	85.39	16.23
	10	51.4	10.56	60.36	12.66	69.70	14.82	74.17	15.89	78.69	16.95	81.97	16.85	83.55	16.15
	15	51.4	11.04	60.36	13.25	69.70	15.46	74.17	16.58	77.74	17.35	79.33	17.06	81.02	17.16
	20	51.4	11.54	60.36	14.26	69.70	17.48	74.17	19.22	75.16	19.32	76.75	19.48	78.44	19.67
	25	51.4	13.57	60.36	17.06	69.70	20.95	71.73	21.69	72.73	21.80	74.42	21.99	75.90	22.17
	30	51.4	16.07	60.36	20.23	68.01	24.04	69.10	24.25	70.09	24.35	71.53	24.52	73.32	24.73
	35	51.4	18.84	60.36	23.80	66.07	26.41	66.66	26.68	67.51	26.68	69.20	26.94	70.79	27.21
	41	51.4	21.95	60.36	27.21	63.14	29.07	64.18	29.07	65.18	29.07	66.36	29.07	68.05	29.07
	43	51.4	24.04	60.36	28.93	61.80	29.34	62.84	29.34	63.59	29.34	64.78	29.34	66.81	29.44
110%	5	47.1	9.41	55.38	11.12	63.83	12.98	67.96	14.07	72.13	15.17	82.36	17.48	84.10	16.87
	10	47.1	9.60	55.38	11.52	63.83	13.46	67.96	14.45	72.13	15.43	80.52	17.38	82.11	16.77
	15	47.1	10.05	55.38	12.02	63.83	14.07	67.96	15.09	72.13	16.10	77.84	17.30	79.53	17.03
	20	47.1	10.50	55.38	12.64	63.83	15.41	67.96	16.90	72.13	18.44	75.41	19.38	77.00	19.51
	25	47.1	12.08	55.38	15.11	63.83	18.44	67.96	20.23	70.69	21.67	72.28	21.83	73.87	22.01
	30	47.1	14.26	55.38	17.88	63.83	22.15	67.96	23.88	68.25	24.12	70.29	24.38	71.88	24.54
	35	47.1	16.74	55.38	21.03	63.83	24.14	65.42	26.41	66.27	26.68	67.76	26.94	69.35	27.21
	41	47.1	19.56	55.38	24.57	62.10	26.14	63.09	28.54	63.83	28.54	64.88	28.81	66.81	28.81
	43	47.1	21.13	55.38	26.68	60.51	28.27	61.75	28.81	62.39	28.81	63.43	29.07	65.22	29.07
100%	5	42.7	8.51	50.27	10.03	57.87	11.78	61.50	13.33	65.57	13.52	73.22	15.41	83.81	17.43
	10	42.7	8.67	50.27	10.37	57.87	12.10	61.50	12.98	65.57	13.89	73.22	15.67	81.72	17.35
	15	42.7	9.04	50.27	10.82	57.87	12.64	61.50	13.60	65.57	14.50	73.22	16.37	79.54	17.27
	20	42.7	9.47	50.27	11.33	57.87	13.46	61.50	14.74	65.57	16.07	73.22	18.87	77.61	19.38
	25	42.7	10.64	50.27	13.25	57.87	16.10	61.50	17.64	65.57	19.22	71.53	21.69	74.97	21.85
	30	42.7	12.58	50.27	15.54	57.87	19.08	61.50	20.60	65.57	22.79	68.85	24.25	71.89	24.33
	35	42.7	14.74	50.27	18.39	57.87	22.44	61.50	21.40	65.08	26.41	66.42	26.68	68.96	26.94
	41	42.7	17.22	50.27	21.45	57.87	26.14	61.50	27.21	62.64	28.28	63.98	28.81	65.32	28.27
	43	42.7	19.19	50.27	23.24	57.87	28.27	61.50	28.27	61.05	29.07	62.74	29.07	63.88	28.81

capacity factor %	outdoor temp.(℃ DB)	indoor temp.(℃ WB)													
		14(℃)		16(℃)		18(℃)		19(℃)		20(℃)		22(℃)		24(℃)	
		TC	PI	TC	PI	TC	PI	TC	PI	TC	PI	TC	PI	TC	PI
		KW	KW	KW	KW	KW	KW	KW	KW	KW	KW	KW	KW	KW	KW
90%	5	38.6	7.63	45.39	9.09	52.31	10.58	55.69	11.25	59.21	12.26	65.92	13.54	72.73	15.14
	10	38.6	7.76	45.39	9.25	52.31	10.77	55.69	11.57	59.21	12.37	65.92	13.97	72.73	15.57
	15	38.6	8.08	45.39	9.65	52.31	11.25	55.69	12.05	59.21	12.93	65.92	14.58	72.73	16.26
	20	38.6	8.45	45.39	10.11	52.31	11.78	55.69	12.72	59.21	13.83	65.92	16.18	72.73	18.68
	25	38.6	9.31	45.39	11.52	52.31	13.91	55.69	15.19	59.21	16.53	65.92	19.35	71.38	21.67
	30	38.6	10.98	45.39	13.60	52.31	16.47	55.69	17.99	59.21	19.59	65.92	22.95	68.95	24.12
	35	38.6	12.85	45.39	15.94	52.31	19.35	55.69	21.16	59.21	23.05	65.08	26.41	66.42	26.68
	41	38.6	14.79	45.39	18.58	52.31	22.47	55.69	24.70	59.21	26.41	62.44	28.81	63.69	28.81
	43	38.6	15.33	45.39	20.18	52.31	24.06	55.69	25.88	59.21	27.21	60.35	29.07	62.34	29.07
80%	5	34.4	6.78	40.18	8.03	46.55	9.33	49.63	10.11	52.41	10.56	58.62	11.94	64.73	12.93
	10	34.4	6.88	40.18	8.16	46.55	9.49	49.63	10.34	52.41	10.85	58.62	12.26	64.73	13.68
	15	34.4	7.15	40.18	8.51	46.55	9.92	49.63	10.61	52.41	11.33	58.62	12.82	64.73	14.29
	20	34.4	7.47	40.18	8.88	46.55	10.34	49.63	11.12	52.41	11.86	58.62	13.68	64.73	15.75
	25	34.4	8.03	40.18	9.87	46.55	11.86	49.63	12.93	52.41	14.02	58.62	16.37	64.73	18.84
	30	34.4	9.47	40.18	11.65	46.55	14.02	49.63	15.30	52.41	16.61	58.62	19.38	64.73	22.36
	35	34.4	11.09	40.18	13.65	46.55	16.47	49.63	17.96	52.41	19.51	58.62	22.79	64.73	26.41
	41	34.4	12.56	40.18	16.23	46.55	19.16	49.63	20.87	52.41	22.65	58.12	26.14	61.90	28.27
	43	34.4	13.38	40.18	16.23	46.55	20.71	49.63	22.17	52.41	23.72	56.92	27.21	59.67	28.81
70%	5	29.9	5.90	35.50	6.99	40.69	7.84	43.17	8.75	45.85	9.12	51.22	10.32	56.68	11.17
	10	29.9	6.00	35.50	7.09	40.69	8.21	43.17	8.80	45.85	9.39	51.22	10.58	56.68	11.81
	15	29.9	6.24	35.50	7.39	40.69	8.59	43.17	9.17	45.85	9.79	51.22	11.04	56.68	12.34
	20	29.9	6.51	35.50	7.71	40.69	8.96	43.17	9.60	45.85	10.24	51.22	11.57	56.68	13.04
	25	29.9	6.85	35.50	8.35	40.69	9.97	43.17	10.82	45.85	11.73	51.22	13.60	56.68	15.59
	30	29.9	8.08	35.50	9.81	40.69	11.78	43.17	12.80	45.85	13.86	51.22	16.10	56.68	18.47
	35	29.9	9.44	35.50	11.52	40.69	13.81	43.17	15.01	45.85	16.26	51.22	18.90	56.68	21.69
	41	29.9	10.74	35.50	13.38	40.69	16.13	43.17	17.51	45.85	18.92	51.22	21.93	56.68	25.42
	43	29.9	11.54	35.50	14.50	40.69	17.46	43.17	19.11	45.85	20.52	50.02	23.00	56.08	26.41
60%	5	25.7	5.10	30.28	6.00	34.87	6.85	37.11	7.41	39.44	7.79	43.91	8.45	48.53	9.36
	10	25.7	5.18	30.28	6.08	34.87	6.99	37.11	7.73	39.44	7.97	43.91	8.96	48.53	9.97
	15	25.7	5.39	30.28	6.32	34.87	7.28	37.11	7.79	39.44	8.32	43.91	9.33	48.53	10.40
	20	25.7	5.60	30.28	6.59	34.87	7.60	37.11	8.13	39.44	8.67	43.91	9.76	48.53	10.88
	25	25.7	5.84	30.28	6.93	34.87	8.21	37.11	8.91	39.44	9.60	43.91	11.06	48.53	12.61
	30	25.7	6.78	30.28	8.19	34.87	12.34	37.11	10.50	39.44	11.28	43.91	13.06	48.53	14.93
	35	25.7	7.89	30.28	9.55	34.87	11.36	37.11	12.29	39.44	13.28	43.91	15.33	48.53	17.51
	41	25.7	9.17	30.28	8.37	34.87	13.06	37.11	13.46	39.44	15.41	43.91	17.86	48.53	20.44
	43	25.7	9.97	30.28	9.17	34.87	13.60	37.11	14.77	39.44	16.74	43.91	19.46	48.53	20.87
50%	5	21.4	4.32	25.30	5.02	29.06	5.76	30.90	6.16	32.74	6.46	36.61	7.12	40.39	7.97
	10	21.4	4.38	25.30	5.10	29.06	5.84	30.90	6.22	32.74	6.59	36.61	7.39	40.39	8.19
	15	21.4	4.54	25.30	5.28	29.06	6.06	30.90	6.46	32.74	6.85	36.61	7.68	40.39	8.53
	20	21.4	4.72	25.30	5.50	29.06	6.32	30.90	6.75	32.74	7.17	36.61	8.03	40.39	8.93
	25	21.4	4.91	25.30	5.74	29.06	6.62	30.90	7.12	32.74	7.65	36.61	8.77	40.39	9.92
	30	21.4	5.58	25.30	6.64	29.06	7.79	30.90	8.40	32.74	9.04	36.61	10.32	40.39	11.73
	35	21.4	6.48	25.30	7.76	29.06	9.12	30.90	9.81	32.74	10.56	36.61	12.10	40.39	13.73
	41	21.4	7.55	25.30	8.99	29.06	10.53	30.90	11.33	32.74	12.26	36.61	14.47	40.39	16.15
	43	21.4	8.35	25.30	9.79	29.06	11.36	30.90	12.93	32.74	13.30	36.61	15.27	40.39	17.99

9) 24HP capacity

cooling

capacity factor %	outdoor temp.(℃ DB)	indoor temp.(℃ WB)													
		14(℃)		16(℃)		18(℃)		19(℃)		20(℃)		22(℃)		24(℃)	
		TC	PI	TC	PI	TC	PI	TC	PI	TC	PI	TC	PI	TC	PI
		KW	KW	KW	KW	KW	KW	KW	KW	KW	KW	KW	KW	KW	KW
130%	5	61.4	11.45	72.42	13.88	83.40	16.20	88.77	18.19	92.09	17.86	94.38	16.21	96.27	15.15
	10	61.4	11.87	72.42	14.36	83.40	16.90	89.17	18.15	90.00	17.83	92.14	17.02	94.18	16.21
	15	61.4	12.44	72.42	15.02	83.40	17.66	86.70	18.12	87.70	17.93	89.17	17.96	91.48	18.03
	20	61.4	13.10	72.42	16.70	82.47	20.26	84.00	20.35	84.33	20.45	86.47	20.64	88.51	20.84
	25	61.4	15.78	72.42	20.10	79.70	22.91	81.03	23.02	81.64	23.14	83.78	23.37	85.72	23.60
	30	61.4	18.71	72.42	23.30	76.81	25.67	77.64	25.74	78.85	25.80	79.81	26.04	82.93	26.69
	35	61.4	22.20	71.80	28.00	74.52	28.31	74.95	28.50	75.98	28.60	78.12	28.89	80.06	29.18
	41	61.4	25.41	70.16	30.16	71.32	30.49	72.35	30.60	73.36	30.70	75.42	31.09	77.24	31.35
	43	61.4	27.51	68.70	30.93	69.66	31.19	70.87	31.54	71.78	31.80	73.94	32.10	75.28	33.00
120%	5	56.8	10.57	66.76	12.53	77.09	14.36	82.02	15.93	87.74	17.22	92.64	17.51	94.51	16.45
	10	56.8	10.80	66.76	13.10	77.09	15.41	82.02	16.57	87.03	17.74	90.65	17.61	92.41	16.86
	15	56.8	11.32	66.76	13.72	77.09	16.15	82.02	17.34	86.00	18.18	87.76	17.86	89.62	17.78
	20	56.8	11.87	66.76	14.82	77.09	18.32	82.02	20.18	83.13	20.32	84.89	20.48	86.75	20.68
	25	56.8	14.07	66.76	17.86	77.09	22.05	79.33	22.88	80.43	22.99	82.30	23.20	83.96	23.40
	30	56.8	16.58	66.76	21.28	75.22	25.43	76.43	25.61	77.54	25.72	79.13	25.93	81.09	26.18
	35	56.8	19.80	66.76	25.16	73.03	28.07	73.74	28.27	74.67	28.36	76.53	28.63	78.29	28.92
	41	56.8	22.81	66.76	29.06	69.84	30.32	70.97	30.34	72.08	30.34	73.44	31.09	75.30	31.09
	43	56.8	24.72	66.76	30.65	68.35	31.01	69.48	31.28	70.32	31.54	71.68	31.89	73.92	32.20
110%	5	52.1	9.42	61.26	11.34	70.59	13.35	75.15	14.49	79.78	15.53	91.16	18.30	93.10	17.42
	10	52.1	9.77	61.26	11.84	70.59	13.95	75.15	15.02	79.78	16.09	89.07	18.19	90.83	17.54
	15	52.1	10.23	61.26	12.39	70.59	14.60	75.15	15.67	79.78	16.82	86.10	18.10	87.96	17.83
	20	52.1	10.74	61.26	13.05	70.59	16.07	75.15	17.67	79.78	19.35	83.40	20.36	85.17	20.52
	25	52.1	12.45	61.26	15.73	70.59	19.35	75.15	22.21	78.14	23.47	79.90	23.65	81.66	23.85
	30	52.1	14.84	61.26	18.74	70.59	23.20	75.15	25.23	75.50	25.53	77.74	25.76	79.50	25.96
	35	52.1	17.51	61.26	22.15	70.59	26.55	72.35	28.05	73.29	28.25	74.95	28.50	76.71	28.77
	41	52.1	20.37	61.26	25.83	68.65	29.22	69.76	30.40	70.59	30.30	71.78	30.78	73.92	31.15
	43	52.1	22.03	61.26	27.75	66.89	30.08	68.28	30.77	69.01	31.21	70.19	31.59	72.15	31.94
100%	5	47.2	8.65	55.60	10.17	64.00	12.09	68.00	13.25	72.53	13.84	80.99	15.77	92.64	18.27
	10	47.2	8.76	55.60	10.61	64.00	12.48	68.00	13.45	72.53	14.41	80.99	16.35	90.27	18.18
	15	47.2	9.15	55.60	11.09	64.00	13.06	68.00	14.08	72.53	15.08	80.99	17.11	87.80	18.09
	20	47.2	9.61	55.60	11.64	64.00	13.95	68.00	15.34	72.53	16.77	80.99	19.81	85.60	20.36
	25	47.2	10.90	55.60	13.72	64.00	16.82	68.00	18.48	72.53	20.19	79.13	22.86	82.71	23.05
	30	47.2	12.97	55.60	16.28	64.00	20.04	68.00	21.88	72.53	23.98	76.16	25.59	79.34	25.75
	35	47.2	15.34	55.60	19.31	64.00	23.69	68.00	24.30	71.98	28.00	73.46	28.27	76.15	28.52
	41	47.2	17.82	55.60	22.36	64.00	27.56	68.00	28.92	69.28	30.24	70.77	30.59	72.25	30.54
	43	47.2	19.68	55.60	24.13	64.00	29.49	68.00	30.08	67.52	30.89	69.38	31.24	70.67	31.47

capacity factor %	outdoor temp.(℃ DB)	indoor temp.(℃ WB)													
		14(℃)		16(℃)		18(℃)		19(℃)		20(℃)		22(℃)		24(℃)	
		TC	PI	TC	PI	TC	PI	TC	PI	TC	PI	TC	PI	TC	PI
		KW	KW	KW	KW	KW	KW	KW	KW	KW	KW	KW	KW	KW	KW
90%	5	42.7	7.48	50.20	9.07	57.86	10.68	61.58	11.44	65.48	12.35	72.91	13.93	80.43	15.61
	10	42.7	7.76	50.20	9.38	57.86	11.05	61.58	11.90	65.48	12.76	72.91	14.50	80.43	16.24
	15	42.7	8.13	50.20	9.81	57.86	11.55	61.58	12.44	65.48	13.37	72.91	15.15	80.43	16.99
	20	42.7	8.53	50.20	10.30	57.86	12.13	61.58	13.14	65.48	14.34	72.91	16.90	80.43	19.61
	25	42.7	9.44	50.20	11.84	57.86	14.44	61.58	15.83	65.48	17.28	72.91	20.35	78.95	22.85
	30	42.7	11.26	50.20	14.10	57.86	17.22	61.58	18.87	65.48	20.59	72.91	24.32	76.26	25.51
	35	42.7	13.29	50.20	16.64	57.86	20.33	61.58	22.30	65.48	24.35	71.98	28.02	73.46	28.25
	41	42.7	15.31	50.20	19.32	57.86	23.63	61.58	25.06	65.48	28.13	69.08	30.46	70.42	30.59
	43	42.7	16.52	50.20	20.73	57.86	25.28	61.58	27.19	65.48	28.81	66.82	30.10	68.93	31.24
80%	5	38.0	6.60	44.44	7.94	51.47	9.31	54.89	10.07	57.96	10.69	64.83	12.17	71.60	13.44
	10	38.0	6.82	44.44	8.21	51.47	9.64	54.89	10.46	57.96	11.12	64.83	12.65	71.60	14.18
	15	38.0	7.11	44.44	8.57	51.47	10.10	54.89	10.87	57.96	11.64	64.83	13.24	71.60	14.85
	20	38.0	7.46	44.44	8.99	51.47	10.57	54.89	11.40	57.96	12.22	64.83	14.18	71.60	16.81
	25	38.0	8.07	44.44	10.06	51.47	12.22	54.89	13.37	57.96	14.56	64.83	17.09	71.60	20.64
	30	38.0	9.63	44.44	12.00	51.47	14.56	54.89	15.95	57.96	17.35	64.83	20.36	71.60	23.60
	35	38.0	11.38	44.44	14.16	51.47	17.22	54.89	18.83	57.96	20.52	64.83	24.07	71.60	27.92
	41	38.0	13.18	44.44	16.55	51.47	19.95	54.89	21.85	57.96	23.86	64.33	27.82	68.45	30.20
	43	38.0	14.79	44.44	17.39	51.47	21.36	54.89	23.57	57.96	25.75	63.13	28.85	65.91	30.86
70%	5	33.1	5.67	39.24	6.81	44.97	7.88	47.74	8.63	50.71	9.17	56.65	10.43	62.69	9.68
	10	33.1	5.87	39.24	7.05	44.97	8.27	47.74	8.89	50.71	9.54	56.65	10.83	62.69	12.16
	15	33.1	6.13	39.24	7.37	44.97	8.67	47.74	9.31	50.71	9.96	56.65	11.32	62.69	12.72
	20	33.1	6.42	39.24	7.72	44.97	9.08	47.74	9.77	50.71	10.47	56.65	11.90	62.69	13.49
	25	33.1	6.79	39.24	8.41	44.97	10.16	47.74	11.09	50.71	12.07	56.65	14.10	62.69	16.25
	30	33.1	8.12	39.24	10.01	44.97	12.13	47.74	13.23	50.71	14.37	56.65	16.80	62.69	19.37
	35	33.1	9.60	39.24	11.84	44.97	14.31	47.74	15.63	50.71	16.97	56.65	19.84	62.69	22.88
	41	33.1	10.94	39.24	13.57	44.97	16.61	47.74	17.95	50.71	19.69	56.65	23.01	62.69	26.70
	43	33.1	11.69	39.24	14.48	44.97	18.25	47.74	19.83	50.71	21.32	55.45	24.68	62.09	28.56
60%	5	28.4	4.80	33.48	5.76	38.55	6.69	41.05	7.27	43.64	7.70	48.57	8.59	53.68	9.60
	10	28.4	4.97	33.48	5.95	38.55	6.94	41.05	7.58	43.64	7.99	48.57	9.06	53.68	10.16
	15	28.4	5.20	33.48	6.21	38.55	7.26	41.05	7.81	43.64	8.36	48.57	9.48	53.68	10.64
	20	28.4	5.43	33.48	6.50	38.55	7.60	41.05	8.18	43.64	8.76	48.57	9.95	53.68	11.16
	25	28.4	5.69	33.48	6.88	38.55	8.27	41.05	9.00	43.64	9.77	48.57	11.35	53.68	13.03
	30	28.4	6.69	33.48	8.24	38.55	11.10	41.05	10.74	43.64	11.62	48.57	13.52	53.68	15.54
	35	28.4	7.92	33.48	9.72	38.55	11.66	41.05	12.68	43.64	13.75	48.57	15.96	53.68	18.35
	41	28.4	9.10	33.48	9.92	38.55	13.39	41.05	14.27	43.64	15.89	48.57	18.52	53.68	21.34
	43	28.4	9.92	33.48	10.41	38.55	14.31	41.05	15.82	43.64	17.34	48.57	20.02	53.68	22.65
50%	5	23.7	3.98	27.98	4.77	32.14	5.50	34.18	5.85	36.22	6.25	40.49	7.06	44.67	7.92
	10	23.7	4.10	27.98	4.88	32.14	5.69	34.18	6.08	36.22	6.50	40.49	7.37	44.67	8.24
	15	23.7	4.27	27.98	5.04	32.14	5.94	34.18	6.36	36.22	6.81	40.49	7.69	44.67	8.62
	20	23.7	4.46	27.98	5.32	32.14	6.21	34.18	6.66	36.22	7.12	40.49	8.07	44.67	9.05
	25	23.7	4.68	27.98	5.56	32.14	6.53	34.18	7.08	36.22	7.66	40.49	8.86	44.67	10.12
	30	23.7	5.40	27.98	6.56	32.14	7.79	34.18	8.47	36.22	9.15	40.49	10.58	44.67	12.07
	35	23.7	6.39	27.98	7.76	32.14	9.25	34.18	9.99	36.22	10.80	40.49	12.48	44.67	14.24
	41	23.7	7.35	27.98	8.59	32.14	10.60	34.18	11.49	36.22	12.46	40.49	14.60	44.67	16.56
	43	23.7	8.16	27.98	9.40	32.14	11.54	34.18	12.79	36.22	13.50	40.49	15.69	44.67	18.25

10) 26HP capacity

cooling

capacity factor %	outdoor temp.(℃ DB)	indoor temp.(℃ WB)													
		14(℃)		16(℃)		18(℃)		19(℃)		20(℃)		22(℃)		24(℃)	
		TC	PI	TC	PI	TC	PI	TC	PI	TC	PI	TC	PI	TC	PI
		KW	KW	KW	KW	KW	KW	KW	KW	KW	KW	KW	KW	KW	KW
130%	5	65.9	12.31	77.76	14.93	89.55	17.45	95.34	19.60	98.93	19.23	101.42	17.46	103.70	16.27
	10	65.9	12.78	77.76	15.47	89.55	18.20	95.74	19.56	96.63	19.21	98.93	18.34	101.40	17.46
	15	65.9	13.40	77.76	16.18	89.55	19.03	93.05	19.52	94.14	19.32	95.74	19.35	98.50	19.43
	20	65.9	14.10	77.76	17.99	88.56	21.83	90.15	21.93	90.55	22.05	92.85	22.25	95.30	22.46
	25	65.9	17.00	77.76	21.67	85.57	24.70	86.96	24.81	87.66	24.95	89.95	25.19	92.30	25.44
	30	65.9	20.16	77.76	25.17	82.47	27.69	83.37	27.75	84.67	27.82	85.76	28.07	89.30	28.80
	35	65.9	23.94	77.10	30.19	79.98	30.53	80.48	30.73	81.58	30.84	83.87	31.15	86.20	31.47
	41	65.9	27.37	75.28	32.50	76.59	32.86	77.69	32.99	78.78	33.09	80.98	33.54	83.20	33.83
	43	65.9	29.64	73.70	33.35	74.79	33.65	76.09	34.04	77.09	34.34	79.38	34.67	81.10	35.00
120%	5	61.0	11.37	71.68	13.49	82.77	15.43	88.06	17.15	94.24	18.55	99.52	18.86	101.80	17.70
	10	61.0	11.63	71.68	14.10	82.77	16.60	88.06	17.86	93.44	19.11	97.33	18.98	99.50	18.17
	15	61.0	12.19	71.68	14.77	82.77	17.41	88.06	18.68	92.35	19.59	94.24	19.24	96.50	19.14
	20	61.0	12.78	71.68	15.96	82.77	19.74	88.06	21.74	89.25	21.90	91.15	22.08	93.40	22.29
	25	61.0	15.16	71.68	19.24	82.77	23.77	85.17	24.67	86.36	24.78	88.36	25.01	90.40	25.23
	30	61.0	17.86	71.68	22.93	80.78	27.42	82.07	27.61	83.27	27.74	84.97	27.96	87.30	28.23
	35	61.0	21.34	71.68	27.12	78.39	30.28	79.18	30.48	80.18	30.59	82.17	30.88	84.30	31.20
	41	61.0	24.57	71.68	31.34	74.99	32.67	76.19	32.69	77.39	32.69	78.88	33.54	81.10	33.54
	43	61.0	26.61	71.68	33.05	73.40	33.44	74.60	33.74	75.49	34.04	76.99	34.44	79.60	34.78
110%	5	55.9	10.12	65.78	12.20	75.79	14.38	80.68	15.60	85.66	16.72	97.93	19.72	100.30	18.75
	10	55.9	10.51	65.78	12.75	75.79	15.02	80.68	16.18	85.66	17.33	95.64	19.60	97.80	18.90
	15	55.9	11.01	65.78	13.34	75.79	15.73	80.68	16.87	85.66	18.12	92.45	19.50	94.70	19.21
	20	55.9	11.56	65.78	14.05	75.79	17.32	80.68	19.04	85.66	20.86	89.55	21.95	91.70	22.11
	25	55.9	13.41	65.78	16.95	75.79	20.86	80.68	24.00	83.87	25.34	85.77	25.54	87.90	25.75
	30	55.9	15.98	65.78	20.20	75.79	25.00	80.68	27.20	81.08	27.52	83.47	27.77	85.60	28.00
	35	55.9	18.86	65.78	23.87	75.79	28.69	77.69	30.25	78.68	30.46	80.48	30.73	82.60	31.03
	41	55.9	21.95	65.78	27.84	73.70	31.60	74.89	32.78	75.79	32.68	77.09	33.20	79.60	33.63
	43	55.9	23.73	65.78	29.89	71.80	32.45	73.30	33.19	74.10	33.69	75.39	34.11	77.70	34.51
100%	5	50.7	9.30	59.70	10.94	68.71	13.02	73.00	14.24	77.89	14.90	86.96	16.98	99.70	19.69
	10	50.7	9.42	59.70	11.41	68.71	13.44	73.00	14.48	77.89	15.51	86.96	17.61	97.10	19.59
	15	50.7	9.85	59.70	11.94	68.71	14.07	73.00	15.17	77.89	16.24	86.96	18.44	94.40	19.49
	20	50.7	10.34	59.70	12.53	68.71	15.02	73.00	16.52	77.89	18.07	86.96	21.35	92.00	21.95
	25	50.7	11.73	59.70	14.77	68.71	18.12	73.00	19.92	77.89	21.77	84.97	24.65	88.90	24.85
	30	50.7	13.96	59.70	17.55	68.71	21.60	73.00	23.59	77.89	25.85	81.78	27.58	85.30	27.77
	35	50.7	16.52	59.70	20.81	68.71	25.54	73.00	26.30	77.29	30.19	78.88	30.48	81.90	30.75
	41	50.7	19.19	59.70	24.09	68.71	29.71	73.00	31.20	74.40	32.62	75.99	32.99	77.80	32.96
	43	50.7	21.18	59.70	25.99	68.71	31.77	73.00	32.45	72.50	33.31	74.50	33.71	76.10	33.99

capacity factor %	outdoor temp.(℃ DB)	indoor temp.(℃ WB)													
		14(℃)		16(℃)		18(℃)		19(℃)		20(℃)		22(℃)		24(℃)	
		TC	PI	TC	PI	TC	PI	TC	PI	TC	PI	TC	PI	TC	PI
		KW	KW	KW	KW	KW	KW	KW	KW	KW	KW	KW	KW	KW	KW
90%	5	45.9	8.03	53.90	9.74	62.13	11.49	66.12	12.31	70.31	13.28	78.28	14.99	86.60	16.81
	10	45.9	8.34	53.90	10.09	62.13	11.89	66.12	12.81	70.31	13.73	78.28	15.62	86.60	17.50
	15	45.9	8.75	53.90	10.55	62.13	12.43	66.12	13.40	70.31	14.39	78.28	16.32	86.60	18.30
	20	45.9	9.17	53.90	11.08	62.13	13.06	66.12	14.15	70.31	15.45	78.28	18.20	86.60	21.14
	25	45.9	10.16	53.90	12.75	62.13	15.55	66.12	17.05	70.31	18.62	78.28	21.93	85.00	24.63
	30	45.9	12.12	53.90	15.19	62.13	18.55	66.12	20.33	70.31	22.19	78.28	26.22	82.10	27.50
	35	45.9	14.32	53.90	17.92	62.13	21.91	66.12	24.04	70.31	26.25	77.29	30.21	79.10	30.46
	41	45.9	16.48	53.90	20.81	62.13	25.47	66.12	26.96	70.31	30.34	74.20	32.84	75.80	32.99
	43	45.9	17.83	53.90	22.31	62.13	27.24	66.12	29.31	70.31	31.06	71.80	32.41	74.20	33.71
80%	5	40.8	7.08	47.72	8.53	55.25	10.00	58.94	10.82	62.23	11.50	69.61	13.09	77.10	14.48
	10	40.8	7.32	47.72	8.83	55.25	10.37	58.94	11.25	62.23	11.97	69.61	13.62	77.10	15.27
	15	40.8	7.64	47.72	9.22	55.25	10.87	58.94	11.69	62.23	12.53	69.61	14.26	77.10	16.00
	20	40.8	8.02	47.72	9.67	55.25	11.38	58.94	12.27	62.23	13.16	69.61	15.27	77.10	18.14
	25	40.8	8.68	47.72	10.82	55.25	13.16	58.94	14.39	62.23	15.68	69.61	18.42	77.10	22.30
	30	40.8	10.36	47.72	12.91	55.25	15.68	58.94	17.18	62.23	18.70	69.61	21.95	77.10	25.44
	35	40.8	12.25	47.72	15.26	55.25	18.55	58.94	20.30	62.23	22.11	69.61	25.96	77.10	30.11
	41	40.8	14.20	47.72	17.80	55.25	21.49	58.94	23.54	62.23	25.72	69.11	30.00	73.70	32.58
	43	40.8	15.99	47.72	18.76	55.25	23.00	58.94	25.42	62.23	27.81	67.91	31.11	70.90	33.29
70%	5	35.6	6.09	42.12	7.31	48.27	8.47	51.26	9.26	54.45	9.86	60.83	11.22	67.50	10.31
	10	35.6	6.30	42.12	7.57	48.27	8.89	51.26	9.57	54.45	10.26	60.83	11.66	67.50	13.09
	15	35.6	6.58	42.12	7.92	48.27	9.32	51.26	10.01	54.45	10.72	60.83	12.19	67.50	13.70
	20	35.6	6.90	42.12	8.30	48.27	9.77	51.26	10.51	54.45	11.27	60.83	12.81	67.50	14.53
	25	35.6	7.29	42.12	9.04	48.27	10.93	51.26	11.94	54.45	12.99	60.83	15.19	67.50	17.51
	30	35.6	8.72	42.12	10.77	48.27	13.06	51.26	14.25	54.45	15.48	60.83	18.10	67.50	20.87
	35	35.6	10.33	42.12	12.75	48.27	15.41	51.26	16.84	54.45	18.28	60.83	21.39	67.50	24.67
	41	35.6	11.78	42.12	14.60	48.27	17.88	51.26	19.32	54.45	21.21	60.83	24.80	67.50	28.78
	43	35.6	12.57	42.12	15.56	48.27	19.66	51.26	21.36	54.45	22.96	59.63	26.63	66.90	30.83
60%	5	30.5	5.14	35.94	6.18	41.39	7.18	44.08	7.80	46.87	8.27	52.16	9.24	57.80	10.33
	10	30.5	5.33	35.94	6.38	41.39	7.46	44.08	8.14	46.87	8.59	52.16	9.74	57.80	10.93
	15	30.5	5.58	35.94	6.66	41.39	7.81	44.08	8.40	46.87	8.98	52.16	10.19	57.80	11.45
	20	30.5	5.82	35.94	6.98	41.39	8.16	44.08	8.79	46.87	9.42	52.16	10.71	57.80	12.01
	25	30.5	6.10	35.94	7.39	41.39	8.89	44.08	9.68	46.87	10.51	52.16	12.22	57.80	14.04
	30	30.5	7.19	35.94	8.86	41.39	11.85	44.08	11.56	46.87	12.51	52.16	14.56	57.80	16.74
	35	30.5	8.51	35.94	10.46	41.39	12.55	44.08	13.65	46.87	14.81	52.16	17.20	57.80	19.77
	41	30.5	9.78	35.94	10.75	41.39	14.41	44.08	15.38	46.87	17.10	52.16	19.95	57.80	22.99
	43	30.5	10.66	35.94	11.27	41.39	15.42	44.08	17.07	46.87	18.67	52.16	21.56	57.80	24.46
50%	5	25.4	4.26	30.04	5.11	34.51	5.90	36.70	6.27	38.89	6.70	43.48	7.58	48.10	8.51
	10	25.4	4.39	30.04	5.23	34.51	6.10	36.70	6.53	38.89	6.98	43.48	7.92	48.10	8.86
	15	25.4	4.57	30.04	5.40	34.51	6.37	36.70	6.83	38.89	7.31	43.48	8.27	48.10	9.27
	20	25.4	4.78	30.04	5.71	34.51	6.66	36.70	7.16	38.89	7.65	43.48	8.68	48.10	9.73
	25	25.4	5.02	30.04	5.97	34.51	7.01	36.70	7.60	38.89	8.23	43.48	9.53	48.10	10.89
	30	25.4	5.79	30.04	7.04	34.51	8.38	36.70	9.11	38.89	9.85	43.48	11.39	48.10	12.99
	35	25.4	6.86	30.04	8.34	34.51	9.95	36.70	10.75	38.89	11.63	43.48	13.44	48.10	15.34
	41	25.4	7.88	30.04	9.20	34.51	11.40	36.70	12.36	38.89	13.41	43.48	15.70	48.10	17.83
	43	25.4	8.76	30.04	10.08	34.51	12.42	36.70	13.73	38.89	14.52	43.48	16.89	48.10	19.63

11) 28HP capacity

cooling

capacity factor %	outdoor temp.(℃ DB)	indoor temp.(℃ WB)													
		14(℃)		16(℃)		18(℃)		19(℃)		20(℃)		22(℃)		24(℃)	
		TC	PI	TC	PI	TC	PI	TC	PI	TC	PI	TC	PI	TC	PI
		KW	KW	KW	KW	KW	KW	KW	KW	KW	KW	KW	KW	KW	KW
130%	5	71.0	13.27	83.84	16.08	96.6	18.76	103.2	21.07	107.33	20.68	110.5	18.77	112.48	17.55
	10	71.0	13.75	83.84	16.63	96.6	19.56	103.2	21.02	104.20	20.64	106.6	19.71	109.34	18.77
	15	71.0	14.41	83.84	17.39	96.6	20.45	99.7	20.98	101.08	20.77	103.2	20.80	106.21	20.88
	20	71.0	15.17	83.84	19.34	95.5	23.45	96.6	23.56	97.60	23.68	100.0	23.90	102.73	24.13
	25	71.0	18.28	83.84	23.27	92.0	26.53	93.1	26.65	94.48	26.79	96.9	27.06	99.59	27.32
	30	71.0	21.67	83.84	26.96	88.9	29.72	90.0	29.80	91.35	29.87	93.4	30.15	96.46	30.89
	35	71.0	25.71	83.21	32.41	85.8	32.77	86.8	33.00	87.88	33.11	90.3	33.44	92.98	33.78
	41	71.0	29.43	80.38	34.92	82.7	35.30	83.7	35.43	85.10	35.54	87.2	35.99	90.19	36.29
	43	71.0	31.86	78.50	35.80	80.6	36.20	82.0	36.60	83.36	37.00	85.4	37.40	88.10	38.00
120%	5	65.6	12.24	77.24	14.52	89.3	16.64	94.8	18.45	102.12	19.94	108.0	20.28	110.39	19.06
	10	65.6	12.51	77.24	15.17	89.3	17.85	94.8	19.19	100.73	20.54	104.9	20.39	107.25	19.53
	15	65.6	13.12	77.24	15.89	89.3	18.71	94.8	20.08	99.69	21.05	101.8	20.68	104.12	20.59
	20	65.6	13.75	77.24	17.16	89.3	21.21	94.8	23.36	96.21	23.53	98.3	23.72	100.64	23.95
	25	65.6	16.30	77.24	20.68	89.3	25.53	91.7	26.49	93.09	26.61	95.2	26.86	97.50	27.09
	30	65.6	19.21	77.24	24.63	87.2	29.44	88.6	29.65	89.96	29.78	91.7	30.02	94.02	30.31
	35	65.6	22.92	77.24	29.12	84.1	32.50	85.4	32.73	86.49	32.83	88.6	33.15	90.89	33.48
	41	65.6	26.42	77.24	33.63	80.9	35.11	82.0	35.13	83.36	35.13	85.4	35.99	87.75	35.99
	43	65.6	28.64	77.24	35.48	79.2	35.90	80.2	36.20	81.28	36.50	83.4	36.90	86.01	37.26
110%	5	60.0	10.91	70.96	13.14	81.6	15.47	86.8	16.78	92.39	17.99	106.3	21.19	109.00	20.17
	10	60.0	11.31	70.96	13.72	81.6	16.15	86.8	17.39	92.39	18.63	103.2	21.07	105.51	20.31
	15	60.0	11.86	70.96	14.35	81.6	16.91	86.8	18.14	92.39	19.48	99.7	20.96	102.03	20.64
	20	60.0	12.44	70.96	15.11	81.6	18.61	86.8	20.47	92.39	22.41	96.6	23.58	98.90	23.75
	25	60.0	14.42	70.96	18.22	81.6	22.41	86.8	25.70	89.96	27.16	92.0	27.37	94.37	27.60
	30	60.0	17.18	70.96	21.70	81.6	26.87	86.8	29.21	87.53	29.55	90.0	29.82	92.28	30.06
	35	60.0	20.27	70.96	25.64	81.6	30.72	83.7	32.48	84.75	32.71	86.8	33.00	89.15	33.31
	41	60.0	23.59	70.96	29.90	79.2	33.80	80.6	35.19	81.63	35.08	83.4	35.63	86.01	36.05
	43	60.0	25.51	70.96	32.13	77.1	34.83	78.8	35.62	79.89	36.12	81.6	36.56	83.92	36.96
100%	5	54.6	10.02	64.37	11.78	74.0	14.01	78.5	15.36	84.06	16.03	93.8	18.27	106.91	21.16
	10	54.6	10.15	64.37	12.29	74.0	14.46	78.5	15.57	84.06	16.68	93.8	18.93	103.42	21.05
	15	54.6	10.61	64.37	12.85	74.0	15.13	78.5	16.31	84.06	17.46	93.8	19.81	99.94	20.94
	20	54.6	11.13	64.37	13.49	74.0	16.15	78.5	17.76	84.06	19.42	93.8	22.94	96.81	23.58
	25	54.6	12.62	64.37	15.89	74.0	19.48	78.5	21.40	84.06	23.38	91.7	26.47	93.67	26.69
	30	54.6	15.02	64.37	18.86	74.0	23.20	78.5	25.33	84.06	27.77	88.2	29.62	90.19	29.82
	35	54.6	17.76	64.37	22.36	74.0	27.43	78.5	28.10	83.36	32.41	85.1	32.73	87.06	33.02
	41	54.6	20.64	64.37	25.89	74.0	31.91	78.5	33.48	80.24	35.00	82.0	35.42	83.92	35.34
	43	54.6	22.79	64.37	27.95	74.0	34.15	78.5	34.83	78.15	35.76	80.2	36.16	82.18	36.42

MRVIII R22

Haier
cooling

capacity factor %	outdoor temp.(℃ DB)	indoor temp.(℃ WB)													
		14(℃)		16(℃)		18(℃)		19(℃)		20(℃)		22(℃)		24(℃)	
		TC	PI	TC	PI	TC	PI	TC	PI	TC	PI	TC	PI	TC	PI
		KW	KW	KW	KW	KW	KW	KW	KW	KW	KW	KW	KW	KW	KW
90%	5	49.3	8.67	58.09	10.51	67.0	12.38	71.2	13.25	75.72	14.31	84.4	16.13	93.33	18.09
	10	49.3	9.00	58.09	10.87	67.0	12.80	71.2	13.79	75.72	14.77	84.4	16.79	93.33	18.81
	15	49.3	9.43	58.09	11.36	67.0	13.38	71.2	14.41	75.72	15.48	84.4	17.55	93.33	19.67
	20	49.3	9.88	58.09	11.93	67.0	14.05	71.2	15.22	75.72	16.61	84.4	19.56	93.33	22.71
	25	49.3	10.94	58.09	13.72	67.0	16.72	71.2	18.33	75.72	20.01	84.4	23.56	91.58	26.46
	30	49.3	13.04	58.09	16.33	67.0	19.94	71.2	21.84	75.72	23.84	84.4	28.15	88.45	29.53
	35	49.3	15.40	58.09	19.26	67.0	23.54	71.2	25.82	75.72	28.19	83.4	32.43	85.32	32.71
	41	49.3	17.73	58.09	22.38	67.0	27.36	71.2	29.04	75.72	32.56	80.2	35.27	81.49	35.42
	43	49.3	19.12	58.09	24.01	67.0	29.27	71.2	31.48	75.72	33.35	78.2	34.86	79.74	36.16
80%	5	43.6	7.65	51.50	9.21	59.4	10.79	63.6	11.67	67.04	12.39	75.0	14.10	83.23	15.57
	10	43.6	7.90	51.50	9.51	59.4	11.17	63.6	12.12	67.04	12.89	75.0	14.65	83.23	16.42
	15	43.6	8.24	51.50	9.93	59.4	11.70	63.6	12.59	67.04	13.49	75.0	15.34	83.23	17.20
	20	43.6	8.65	51.50	10.41	59.4	12.25	63.6	13.20	67.04	14.16	75.0	16.42	83.23	19.46
	25	43.6	9.35	51.50	11.65	59.4	14.16	63.6	15.48	67.04	16.86	75.0	19.79	83.23	23.88
	30	43.6	11.16	51.50	13.89	59.4	16.86	63.6	18.47	67.04	20.09	75.0	23.58	83.23	27.32
	35	43.6	13.19	51.50	16.40	59.4	19.94	63.6	21.81	67.04	23.75	75.0	27.87	83.23	32.33
	41	43.6	15.26	51.50	19.17	59.4	23.10	63.6	25.30	67.04	27.63	75.0	32.20	79.40	34.96
	43	43.6	17.11	51.50	20.13	59.4	24.74	63.6	27.28	67.04	29.80	75.0	33.40	75.57	35.72
70%	5	38.3	6.58	45.22	7.90	51.8	9.13	55.2	10.00	58.70	10.63	65.6	12.09	72.78	11.25
	10	38.3	6.81	45.22	8.17	51.8	9.58	55.2	10.31	58.70	11.05	65.6	12.55	72.78	14.09
	15	38.3	7.11	45.22	8.54	51.8	10.04	55.2	10.78	58.70	11.54	65.6	13.12	72.78	14.74
	20	38.3	7.45	45.22	8.95	51.8	10.52	55.2	11.31	58.70	12.13	65.6	13.79	72.78	15.62
	25	38.3	7.87	45.22	9.74	51.8	11.77	55.2	12.85	58.70	13.98	65.6	16.33	72.78	18.82
	30	38.3	9.40	45.22	11.60	51.8	14.05	55.2	15.32	58.70	16.65	65.6	19.46	72.78	22.42
	35	38.3	11.12	45.22	13.72	51.8	16.58	55.2	18.10	58.70	19.65	65.6	22.97	72.78	26.49
	41	38.3	12.68	45.22	15.73	51.8	19.24	55.2	20.80	58.70	22.80	65.6	26.64	72.78	30.92
	43	38.3	13.54	45.22	16.78	51.8	21.13	55.2	22.97	58.70	24.69	65.6	28.56	72.78	33.05
60%	5	32.7	5.57	38.62	6.68	44.5	7.76	47.6	8.43	50.71	8.93	56.3	9.95	62.33	11.12
	10	32.7	5.77	38.62	6.90	44.5	8.05	47.6	8.79	50.71	9.26	56.3	10.50	62.33	11.77
	15	32.7	6.03	38.62	7.20	44.5	8.42	47.6	9.05	50.71	9.68	56.3	10.98	62.33	12.32
	20	32.7	6.29	38.62	7.53	44.5	8.80	47.6	9.48	50.71	10.15	56.3	11.53	62.33	12.92
	25	32.7	6.59	38.62	7.97	44.5	9.58	47.6	10.43	50.71	11.31	56.3	13.15	62.33	15.10
	30	32.7	7.76	38.62	9.55	44.5	12.89	47.6	12.44	50.71	13.46	56.3	15.66	62.33	17.99
	35	32.7	9.18	38.62	11.26	44.5	13.50	47.6	14.69	50.71	15.93	56.3	18.48	62.33	21.24
	41	32.7	10.55	38.62	11.46	44.5	15.51	47.6	16.52	50.71	18.40	56.3	21.45	62.33	24.71
	43	32.7	11.49	38.62	12.04	44.5	16.57	47.6	18.31	50.71	20.08	56.3	23.19	62.33	26.21
50%	5	27.3	4.62	32.34	5.53	37.2	6.38	39.6	6.79	42.03	7.25	46.9	8.18	51.89	9.18
	10	27.3	4.76	32.34	5.66	37.2	6.59	39.6	7.05	42.03	7.53	46.9	8.54	51.89	9.55
	15	27.3	4.95	32.34	5.84	37.2	6.88	39.6	7.37	42.03	7.89	46.9	8.91	51.89	9.99
	20	27.3	5.18	32.34	6.17	37.2	7.20	39.6	7.72	42.03	8.25	46.9	9.35	51.89	10.48
	25	27.3	5.43	32.34	6.45	37.2	7.57	39.6	8.20	42.03	8.88	46.9	10.27	51.89	11.72
	30	27.3	6.26	32.34	7.60	37.2	9.03	39.6	9.81	42.03	10.61	46.9	12.26	51.89	13.98
	35	27.3	7.41	32.34	9.00	37.2	10.71	39.6	11.58	42.03	12.51	46.9	14.46	51.89	16.49
	41	27.3	8.52	32.34	9.96	37.2	12.29	39.6	13.32	42.03	14.44	46.9	16.92	51.89	19.19
	43	27.3	9.46	32.34	10.90	37.2	13.37	39.6	14.82	42.03	15.64	46.9	18.18	51.89	21.14

12) 30HP capacity

cooling

capacity factor %	outdoor temp.(℃ DB)	indoor temp.(℃ WB)													
		14(℃)		16(℃)		18(℃)		19(℃)		20(℃)		22(℃)		24(℃)	
		TC	PI	TC	PI	TC	PI	TC	PI	TC	PI	TC	PI	TC	PI
		KW	KW	KW	KW	KW	KW	KW	KW	KW	KW	KW	KW	KW	KW
130%	5	76.8	13.36	90.78	16.36	104.56	19.32	111.70	21.88	116.22	21.32	119.60	19.36	121.77	17.40
	10	76.8	14.08	90.78	17.16	104.56	20.28	111.70	21.84	112.83	21.44	115.46	20.44	118.38	19.44
	15	76.8	14.80	90.78	17.96	104.56	21.24	107.94	21.80	109.45	21.56	111.70	21.52	114.98	21.64
	20	76.8	15.60	90.78	20.04	103.43	24.44	104.56	24.56	105.69	24.68	108.32	24.92	111.21	25.16
	25	76.8	18.92	90.78	24.24	99.67	27.72	100.80	27.84	102.30	28.00	104.93	28.28	107.82	28.56
	30	76.8	22.44	90.78	29.04	96.28	31.20	97.41	31.20	98.92	31.24	101.17	31.48	104.43	32.64
	35	76.8	26.84	90.10	34.00	92.90	34.40	94.03	34.56	95.15	34.76	97.79	35.12	100.66	35.48
	41	76.8	30.32	87.04	36.36	89.51	36.72	90.64	36.96	92.15	37.16	94.40	38.00	97.64	38.40
	43	76.8	32.96	85.00	37.58	87.26	38.14	88.76	38.70	90.27	39.27	92.52	39.83	95.38	41.00
120%	5	71.1	12.44	83.64	14.84	96.66	16.68	102.68	18.92	110.58	20.56	116.97	20.84	119.51	19.28
	10	71.1	12.76	83.64	15.60	96.66	18.44	102.68	19.88	109.07	21.32	113.58	21.16	116.11	20.24
	15	71.1	13.40	83.64	16.36	96.66	19.40	102.68	20.84	107.94	21.88	110.20	21.48	112.72	21.20
	20	71.1	14.08	83.64	17.72	96.66	22.04	102.68	24.32	104.18	24.52	106.44	24.72	108.95	24.96
	25	71.1	16.80	83.64	21.48	96.66	26.64	99.29	27.68	100.80	27.80	103.05	28.08	105.56	28.32
	30	71.1	19.72	83.64	25.68	94.40	30.84	95.91	31.00	97.41	31.16	99.29	31.44	101.79	31.76
	35	71.1	23.88	83.64	30.48	91.02	34.16	92.52	34.32	93.65	34.52	95.91	34.84	98.39	35.20
	41	71.1	27.28	83.64	35.48	87.63	36.36	88.76	36.40	90.27	36.40	92.52	38.00	95.00	38.00
	43	71.1	29.32	83.64	37.20	85.75	37.58	86.88	38.14	88.01	38.70	90.27	39.45	93.12	40.02
110%	5	64.9	10.92	76.84	13.36	88.38	15.84	94.03	17.20	100.04	18.36	115.09	22.00	118.00	20.72
	10	64.9	11.48	76.84	14.04	88.38	16.64	94.03	17.96	100.04	19.28	111.70	21.88	114.23	21.08
	15	64.9	12.04	76.84	14.72	88.38	17.44	94.03	18.72	100.04	20.20	107.94	21.76	110.46	21.44
	20	64.9	12.68	76.84	15.52	88.38	19.28	94.03	21.24	100.04	23.32	104.56	24.56	107.07	24.76
	25	64.9	14.80	76.84	18.84	88.38	23.32	94.03	27.68	97.41	28.96	99.67	29.20	102.16	29.44
	30	64.9	17.76	76.84	22.56	88.38	27.92	94.03	30.56	94.78	30.96	97.41	31.20	99.90	31.48
	35	64.9	21.04	76.84	26.76	88.38	33.12	90.64	34.12	91.77	34.28	94.03	34.56	96.51	34.88
	41	64.9	24.40	76.84	31.16	85.75	36.88	87.26	37.04	88.38	36.84	90.27	37.60	93.12	38.40
	43	64.9	26.40	76.84	33.20	83.50	36.64	85.38	37.58	86.50	38.52	88.38	39.08	90.85	39.83
100%	5	59.2	10.16	69.70	11.92	80.11	14.32	85.00	15.28	91.02	16.36	101.55	18.64	115.74	22.00
	10	59.2	10.24	69.70	12.52	80.11	14.84	85.00	16.04	91.02	17.20	101.55	19.60	111.97	21.88
	15	59.2	10.72	69.70	13.12	80.11	15.56	85.00	16.80	91.02	18.04	101.55	20.56	108.20	21.76
	20	59.2	11.28	69.70	13.80	80.11	16.64	85.00	18.36	91.02	20.12	101.55	23.88	104.80	24.56
	25	59.2	12.88	69.70	16.36	80.11	20.20	85.00	22.24	91.02	24.36	99.29	27.64	101.41	27.88
	30	59.2	15.40	69.70	19.60	80.11	24.16	85.00	26.60	91.02	28.96	95.53	30.96	97.64	31.24
	35	59.2	18.36	69.70	23.28	80.11	28.68	85.00	31.00	90.27	34.00	92.15	34.32	94.25	34.60
	41	59.2	21.24	69.70	26.80	80.11	33.32	85.00	35.20	86.88	36.96	88.76	37.20	90.85	37.60
	43	59.2	23.28	69.70	28.84	80.11	35.36	85.00	36.64	84.62	37.58	86.88	38.33	88.97	39.08

MRVIII R22

Haier
cooling

capacity factor %	outdoor temp.(℃ DB)	indoor temp.(℃ WB)													
		14(℃)		16(℃)		18(℃)		19(℃)		20(℃)		22(℃)		24(℃)	
		TC	PI	TC	PI	TC	PI	TC	PI	TC	PI	TC	PI	TC	PI
		KW	KW	KW	KW	KW	KW	KW	KW	KW	KW	KW	KW	KW	KW
90%	5	53.4	8.52	62.90	10.48	72.59	12.48	77.10	13.44	81.99	14.40	91.39	16.52	101.03	18.56
	10	53.4	9.00	62.90	11.00	72.59	13.08	77.10	14.12	81.99	15.16	91.39	17.32	101.03	19.48
	15	53.4	9.48	62.90	11.52	72.59	13.68	77.10	14.80	81.99	15.92	91.39	18.12	101.03	20.40
	20	53.4	9.96	62.90	12.12	72.59	14.40	77.10	15.64	81.99	17.12	91.39	20.28	101.03	23.64
	25	53.4	11.08	62.90	14.04	72.59	17.24	77.10	18.96	81.99	20.76	91.39	24.56	99.15	27.64
	30	53.4	13.32	62.90	16.84	72.59	20.68	77.10	22.72	81.99	24.84	91.39	29.52	95.76	30.92
	35	53.4	15.84	62.90	19.96	72.59	24.52	77.10	26.96	81.99	29.48	90.27	34.04	92.36	34.28
	41	53.4	18.24	62.90	23.12	72.59	28.52	77.10	29.40	81.99	34.28	86.88	36.92	88.22	37.20
	43	53.4	20.32	62.90	24.56	72.59	30.48	77.10	32.80	81.99	34.95	84.62	35.88	86.33	38.33
80%	5	47.3	7.48	55.76	9.12	64.31	10.76	68.83	11.64	72.59	12.52	81.24	14.32	90.10	16.08
	10	47.3	7.84	55.76	9.56	64.31	11.32	68.83	12.24	72.59	13.16	81.24	15.04	90.10	16.92
	15	47.3	8.20	55.76	10.00	64.31	11.88	68.83	12.84	72.59	13.80	81.24	15.76	90.10	17.76
	20	47.3	8.64	55.76	10.52	64.31	12.48	68.83	13.48	72.59	14.52	81.24	16.92	90.10	20.52
	25	47.3	9.40	55.76	11.84	64.31	14.52	68.83	15.92	72.59	17.40	81.24	20.52	90.10	25.68
	30	47.3	11.32	55.76	14.24	64.31	17.40	68.83	19.12	72.59	20.84	81.24	24.56	90.10	28.56
	35	47.3	13.48	55.76	16.92	64.31	20.68	68.83	22.68	72.59	24.76	81.24	29.16	90.10	33.84
	41	47.3	15.88	55.76	19.48	64.31	23.88	68.83	26.28	72.59	28.84	81.24	33.88	85.95	36.88
	43	47.3	18.52	55.76	21.28	64.31	25.40	68.83	28.68	72.59	31.84	81.24	35.04	81.81	37.76
70%	5	41.5	6.36	48.96	7.72	56.04	9.16	59.80	9.88	63.56	10.68	71.08	12.20	78.79	9.76
	10	41.5	6.68	48.96	8.12	56.04	9.64	59.80	10.40	63.56	11.20	71.08	12.80	78.79	14.44
	15	41.5	7.00	48.96	8.52	56.04	10.12	59.80	10.92	63.56	11.72	71.08	13.40	78.79	15.12
	20	41.5	7.36	48.96	8.96	56.04	10.64	59.80	11.48	63.56	12.36	71.08	14.12	78.79	16.08
	25	41.5	7.80	48.96	9.80	56.04	11.96	59.80	13.12	63.56	14.32	71.08	16.84	78.79	19.48
	30	41.5	9.44	48.96	11.80	56.04	14.40	59.80	15.76	63.56	17.16	71.08	20.16	78.79	23.32
	35	41.5	11.28	48.96	14.04	56.04	17.08	59.80	18.72	63.56	20.36	71.08	23.92	78.79	27.68
	41	41.5	12.88	48.96	15.92	56.04	19.72	59.80	21.24	63.56	23.56	71.08	27.72	78.79	32.20
	43	41.5	13.68	48.96	16.76	56.04	21.92	59.80	23.69	63.56	25.48	71.08	30.24	78.79	35.20
60%	5	35.4	5.28	41.82	6.44	48.14	7.60	51.53	8.28	54.91	8.84	60.93	10.08	67.48	11.36
	10	35.4	5.56	41.82	6.76	48.14	8.00	51.53	8.64	54.91	9.28	60.93	10.60	67.48	11.96
	15	35.4	5.84	41.82	7.08	48.14	8.40	51.53	9.08	54.91	9.72	60.93	11.12	67.48	12.56
	20	35.4	6.12	41.82	7.44	48.14	8.80	51.53	9.52	54.91	10.24	60.93	11.72	67.48	13.20
	25	35.4	6.44	41.82	7.92	48.14	9.64	51.53	10.52	54.91	11.48	60.93	13.44	67.48	15.52
	30	35.4	7.68	41.82	9.60	48.14	11.64	51.53	12.68	54.91	13.80	60.93	16.12	67.48	18.60
	35	35.4	9.20	41.82	11.44	48.14	13.80	51.53	15.08	54.91	16.40	60.93	19.12	67.48	22.08
	41	35.4	10.48	41.82	13.00	48.14	15.84	51.53	17.32	54.91	18.88	60.93	22.12	67.48	25.60
	43	35.4	11.44	41.82	13.28	48.14	17.28	51.53	19.36	54.91	20.68	60.93	23.76	67.48	28.00
50%	5	29.6	4.28	35.02	5.28	40.24	6.12	42.88	6.48	45.51	7.04	50.77	8.12	56.17	9.12
	10	29.6	4.48	35.02	5.44	40.24	6.44	42.88	6.92	45.51	7.44	50.77	8.52	56.17	9.60
	15	29.6	4.68	35.02	5.60	40.24	6.76	42.88	7.28	45.51	7.84	50.77	8.92	56.17	10.08
	20	29.6	4.92	35.02	6.00	40.24	7.08	42.88	7.64	45.51	8.20	50.77	9.40	56.17	10.60
	25	29.6	5.20	35.02	6.28	40.24	7.48	42.88	8.16	45.51	8.88	50.77	10.36	56.17	11.92
	30	29.6	6.08	35.02	7.52	40.24	9.04	42.88	9.88	45.51	10.72	50.77	12.52	56.17	14.32
	35	29.6	7.32	35.02	9.00	40.24	10.84	42.88	11.76	45.51	12.76	50.77	14.84	56.17	17.00
	41	29.6	8.32	35.02	9.56	40.24	12.36	42.88	13.48	45.51	14.64	50.77	17.04	56.17	19.60
	43	29.6	9.28	35.02	10.52	40.24	13.56	42.88	14.68	45.51	15.84	50.77	18.60	56.17	21.40

13) 32HP capacity

cooling

capacity factor %	outdoor temp.(℃ DB)	indoor temp.(℃ WB)													
		14(℃)		16(℃)		18(℃)		19(℃)		20(℃)		22(℃)		24(℃)	
		TC	PI	TC	PI	TC	PI	TC	PI	TC	PI	TC	PI	TC	PI
		KW	KW	KW	KW	KW	KW	KW	KW	KW	KW	KW	KW	KW	KW
130%	5	81.4	14.22	96.1	17.42	110.7	20.57	118.27	23.29	123.05	22.70	126.64	20.61	129.20	18.52
	10	81.4	14.99	96.1	18.27	110.7	21.59	118.27	23.25	119.47	22.82	122.26	21.76	125.60	20.69
	15	81.4	15.75	96.1	19.12	110.7	22.61	114.29	23.21	115.88	22.95	118.27	22.91	122.00	23.04
	20	81.4	16.61	96.1	21.33	109.5	26.02	110.71	26.14	111.90	26.27	114.69	26.53	118.00	26.78
	25	81.4	20.14	96.1	25.80	105.5	29.51	106.73	29.64	108.32	29.81	111.11	30.10	114.40	30.40
	30	81.4	23.89	96.1	30.91	101.9	33.21	103.14	33.21	104.73	33.26	107.12	33.51	110.80	34.75
	35	81.4	28.57	95.4	36.19	98.4	36.62	99.56	36.79	100.75	37.00	103.54	37.39	106.80	37.77
	41	81.4	32.28	92.2	38.71	94.8	39.09	95.97	39.34	97.57	39.56	99.96	40.45	103.60	40.88
	43	81.4	35.09	90.0	40.00	92.4	40.60	93.98	41.20	95.58	41.80	97.96	42.40	101.20	43.00
120%	5	75.2	13.24	88.6	15.80	102.3	17.76	108.72	20.14	117.08	21.89	123.85	22.18	126.80	20.52
	10	75.2	13.58	88.6	16.61	102.3	19.63	108.72	21.16	115.49	22.70	120.27	22.53	123.20	21.55
	15	75.2	14.26	88.6	17.42	102.3	20.65	108.72	22.18	114.29	23.29	116.68	22.87	119.60	22.57
	20	75.2	14.99	88.6	18.86	102.3	23.46	108.72	25.89	110.31	26.10	112.70	26.31	115.60	26.57
	25	75.2	17.88	88.6	22.87	102.3	28.36	105.13	29.47	106.73	29.59	109.12	29.89	112.00	30.15
	30	75.2	20.99	88.6	27.34	100.0	32.83	101.55	33.00	103.14	33.17	105.13	33.47	108.00	33.81
	35	75.2	25.42	88.6	32.45	96.4	36.36	97.96	36.53	99.16	36.75	101.55	37.09	104.40	37.47
	41	75.2	29.04	88.6	37.77	92.8	38.71	93.98	38.75	95.58	38.75	97.96	40.45	100.80	40.45
	43	75.2	31.21	88.6	39.60	90.8	40.00	91.99	40.60	93.19	41.20	95.58	42.00	98.80	42.60
110%	5	68.8	11.62	81.4	14.22	93.6	16.86	99.56	18.31	105.93	19.54	121.86	23.42	125.20	22.06
	10	68.8	12.22	81.4	14.95	93.6	17.71	99.56	19.12	105.93	20.52	118.27	23.29	121.20	22.44
	15	68.8	12.82	81.4	15.67	93.6	18.57	99.56	19.93	105.93	21.50	114.29	23.16	117.20	22.82
	20	68.8	13.50	81.4	16.52	93.6	20.52	99.56	22.61	105.93	24.82	110.71	26.14	113.60	26.36
	25	68.8	15.75	81.4	20.06	93.6	24.82	99.56	29.47	103.14	30.83	105.53	31.08	108.40	31.34
	30	68.8	18.91	81.4	24.02	93.6	29.72	99.56	32.53	100.35	32.96	103.14	33.21	106.00	33.51
	35	68.8	22.40	81.4	28.49	93.6	35.26	95.97	36.32	97.17	36.49	99.56	36.79	102.40	37.13
	41	68.8	25.97	81.4	33.17	90.8	39.26	92.39	39.43	93.58	39.22	95.58	40.03	98.80	40.88
	43	68.8	28.10	81.4	35.34	88.4	39.00	90.40	40.00	91.59	41.00	93.58	41.60	96.40	42.40
100%	5	62.6	10.82	73.8	12.69	84.8	15.24	90.00	16.27	96.37	17.42	107.52	19.84	122.80	23.42
	10	62.6	10.90	73.8	13.33	84.8	15.80	90.00	17.07	96.37	18.31	107.52	20.86	118.80	23.29
	15	62.6	11.41	73.8	13.97	84.8	16.56	90.00	17.88	96.37	19.20	107.52	21.89	114.80	23.16
	20	62.6	12.01	73.8	14.69	84.8	17.71	90.00	19.54	96.37	21.42	107.52	25.42	111.20	26.14
	25	62.6	13.71	73.8	17.42	84.8	21.50	90.00	23.67	96.37	25.93	105.13	29.42	107.60	29.68
	30	62.6	16.39	73.8	20.86	84.8	25.72	90.00	28.32	96.37	30.83	101.15	32.96	103.60	33.26
	35	62.6	19.54	73.8	24.78	84.8	30.53	90.00	33.00	95.58	36.19	97.57	36.53	100.00	36.83
	41	62.6	22.61	73.8	28.53	84.8	35.47	90.00	37.47	91.99	39.34	93.98	39.60	96.40	40.03
	43	62.6	24.78	73.8	30.70	84.8	37.64	90.00	39.00	89.60	40.00	91.99	40.80	94.40	41.60

capacity factor %	outdoor temp.(℃ DB)	indoor temp.(℃ WB)													
		14(℃)		16(℃)		18(℃)		19(℃)		20(℃)		22(℃)		24(℃)	
		TC	PI	TC	PI	TC	PI	TC	PI	TC	PI	TC	PI	TC	PI
		KW	KW	KW	KW	KW	KW	KW	KW	KW	KW	KW	KW	KW	KW
90%	5	53.4	8.52	62.90	10.48	72.59	12.48	77.10	13.44	81.99	14.40	91.39	16.52	101.03	18.56
	10	53.4	9.00	62.90	11.00	72.59	13.08	77.10	14.12	81.99	15.16	91.39	17.32	101.03	19.48
	15	53.4	9.48	62.90	11.52	72.59	13.68	77.10	14.80	81.99	15.92	91.39	18.12	101.03	20.40
	20	53.4	9.96	62.90	12.12	72.59	14.40	77.10	15.64	81.99	17.12	91.39	20.28	101.03	23.64
	25	53.4	11.08	62.90	14.04	72.59	17.24	77.10	18.96	81.99	20.76	91.39	24.56	99.15	27.64
	30	53.4	13.32	62.90	16.84	72.59	20.68	77.10	22.72	81.99	24.84	91.39	29.52	95.76	30.92
	35	53.4	15.84	62.90	19.96	72.59	24.52	77.10	26.96	81.99	29.48	90.27	34.04	92.36	34.28
	41	53.4	18.24	62.90	23.12	72.59	28.52	77.10	29.40	81.99	34.28	86.88	36.92	88.22	37.20
	43	53.4	20.32	62.90	24.56	72.59	30.48	77.10	32.80	81.99	34.95	84.62	35.88	86.33	38.33
80%	5	47.3	7.48	55.76	9.12	64.31	10.76	68.83	11.64	72.59	12.52	81.24	14.32	90.10	16.08
	10	47.3	7.84	55.76	9.56	64.31	11.32	68.83	12.24	72.59	13.16	81.24	15.04	90.10	16.92
	15	47.3	8.20	55.76	10.00	64.31	11.88	68.83	12.84	72.59	13.80	81.24	15.76	90.10	17.76
	20	47.3	8.64	55.76	10.52	64.31	12.48	68.83	13.48	72.59	14.52	81.24	16.92	90.10	20.52
	25	47.3	9.40	55.76	11.84	64.31	14.52	68.83	15.92	72.59	17.40	81.24	20.52	90.10	25.68
	30	47.3	11.32	55.76	14.24	64.31	17.40	68.83	19.12	72.59	20.84	81.24	24.56	90.10	28.56
	35	47.3	13.48	55.76	16.92	64.31	20.68	68.83	22.68	72.59	24.76	81.24	29.16	90.10	33.84
	41	47.3	15.88	55.76	19.48	64.31	23.88	68.83	26.28	72.59	28.84	81.24	33.88	85.95	36.88
	43	47.3	18.52	55.76	21.28	64.31	25.40	68.83	28.68	72.59	31.84	81.24	35.04	81.81	37.76
70%	5	41.5	6.36	48.96	7.72	56.04	9.16	59.80	9.88	63.56	10.68	71.08	12.20	78.79	9.76
	10	41.5	6.68	48.96	8.12	56.04	9.64	59.80	10.40	63.56	11.20	71.08	12.80	78.79	14.44
	15	41.5	7.00	48.96	8.52	56.04	10.12	59.80	10.92	63.56	11.72	71.08	13.40	78.79	15.12
	20	41.5	7.36	48.96	8.96	56.04	10.64	59.80	11.48	63.56	12.36	71.08	14.12	78.79	16.08
	25	41.5	7.80	48.96	9.80	56.04	11.96	59.80	13.12	63.56	14.32	71.08	16.84	78.79	19.48
	30	41.5	9.44	48.96	11.80	56.04	14.40	59.80	15.76	63.56	17.16	71.08	20.16	78.79	23.32
	35	41.5	11.28	48.96	14.04	56.04	17.08	59.80	18.72	63.56	20.36	71.08	23.92	78.79	27.68
	41	41.5	12.88	48.96	15.92	56.04	19.72	59.80	21.24	63.56	23.56	71.08	27.72	78.79	32.20
	43	41.5	13.68	48.96	16.76	56.04	21.92	59.80	23.69	63.56	25.48	71.08	30.24	78.79	35.20
60%	5	35.4	5.28	41.82	6.44	48.14	7.60	51.53	8.28	54.91	8.84	60.93	10.08	67.48	11.36
	10	35.4	5.56	41.82	6.76	48.14	8.00	51.53	8.64	54.91	9.28	60.93	10.60	67.48	11.96
	15	35.4	5.84	41.82	7.08	48.14	8.40	51.53	9.08	54.91	9.72	60.93	11.12	67.48	12.56
	20	35.4	6.12	41.82	7.44	48.14	8.80	51.53	9.52	54.91	10.24	60.93	11.72	67.48	13.20
	25	35.4	6.44	41.82	7.92	48.14	9.64	51.53	10.52	54.91	11.48	60.93	13.44	67.48	15.52
	30	35.4	7.68	41.82	9.60	48.14	11.64	51.53	12.68	54.91	13.80	60.93	16.12	67.48	18.60
	35	35.4	9.20	41.82	11.44	48.14	13.80	51.53	15.08	54.91	16.40	60.93	19.12	67.48	22.08
	41	35.4	10.48	41.82	13.00	48.14	15.84	51.53	17.32	54.91	18.88	60.93	22.12	67.48	25.60
	43	35.4	11.44	41.82	13.28	48.14	17.28	51.53	19.36	54.91	20.68	60.93	23.76	67.48	28.00
50%	5	29.6	4.28	35.02	5.28	40.24	6.12	42.88	6.48	45.51	7.04	50.77	8.12	56.17	9.12
	10	29.6	4.48	35.02	5.44	40.24	6.44	42.88	6.92	45.51	7.44	50.77	8.52	56.17	9.60
	15	29.6	4.68	35.02	5.60	40.24	6.76	42.88	7.28	45.51	7.84	50.77	8.92	56.17	10.08
	20	29.6	4.92	35.02	6.00	40.24	7.08	42.88	7.64	45.51	8.20	50.77	9.40	56.17	10.60
	25	29.6	5.20	35.02	6.28	40.24	7.48	42.88	8.16	45.51	8.88	50.77	10.36	56.17	11.92
	30	29.6	6.08	35.02	7.52	40.24	9.04	42.88	9.88	45.51	10.72	50.77	12.52	56.17	14.32
	35	29.6	7.32	35.02	9.00	40.24	10.84	42.88	11.76	45.51	12.76	50.77	14.84	56.17	17.00
	41	29.6	8.32	35.02	9.56	40.24	12.36	42.88	13.48	45.51	14.64	50.77	17.04	56.17	19.60
	43	29.6	9.28	35.02	10.52	40.24	13.56	42.88	14.68	45.51	15.84	50.77	18.60	56.17	21.40

13) 34HP capacity

cooling

capacity factor %	outdoor temp.(℃ DB)	indoor temp.(℃ WB)													
		14(℃)		16(℃)		18(℃)		19(℃)		20(℃)		22(℃)		24(℃)	
		TC	PI	TC	PI	TC	PI	TC	PI	TC	PI	TC	PI	TC	PI
		KW	KW	KW	KW	KW	KW	KW	KW	KW	KW	KW	KW	KW	KW
130%	5	86.56	16.65	102.12	20.10	117.60	23.37	124.97	26.15	129.49	25.74	132.48	23.36	135.37	22.15
	10	86.56	17.16	102.12	20.70	117.60	24.30	125.77	26.08	126.90	25.63	129.94	24.48	132.78	23.33
	15	86.56	17.96	102.12	21.63	117.60	25.39	122.60	26.04	123.90	25.78	125.77	25.86	128.98	25.94
	20	86.56	18.89	102.12	24.02	116.27	29.08	118.80	29.21	118.93	29.36	121.97	29.62	124.81	29.91
	25	86.56	22.72	102.12	28.86	112.50	32.86	114.63	33.01	115.14	33.19	118.18	33.51	120.82	33.84
	30	86.56	26.92	102.12	33.01	108.31	36.76	109.44	36.88	111.15	36.99	112.01	37.35	116.83	38.11
	35	86.56	31.85	101.20	40.09	105.32	40.52	105.65	40.84	107.18	40.93	110.22	41.35	112.86	41.76
	41	86.56	36.64	99.36	43.31	100.52	43.80	102.05	43.92	103.36	44.01	106.42	44.40	108.64	44.74
	43	86.56	39.60	97.40	44.28	98.26	44.54	99.97	44.98	101.08	45.24	104.34	45.57	105.78	46.50
120%	5	80.24	15.32	94.16	18.12	108.69	20.91	115.72	23.01	123.44	24.83	130.24	25.27	132.91	23.89
	10	80.24	15.64	94.16	18.89	108.69	22.20	115.72	23.85	122.73	25.50	127.85	25.33	130.31	24.26
	15	80.24	16.38	94.16	19.79	108.69	23.23	115.72	24.93	121.20	26.13	123.66	25.67	126.32	25.64
	20	80.24	17.16	94.16	21.35	108.69	26.32	115.72	28.98	117.23	29.17	119.69	29.41	122.35	29.69
	25	80.24	20.29	94.16	25.67	108.69	31.65	111.93	32.82	113.43	32.97	116.10	33.27	118.36	33.55
	30	80.24	23.94	94.16	30.54	106.02	36.44	107.73	36.71	109.24	36.87	111.53	37.16	114.39	37.51
	35	80.24	28.43	94.16	36.05	103.23	40.17	103.94	40.48	105.27	40.58	107.93	40.97	110.39	41.38
	41	80.24	32.86	94.16	41.52	98.44	43.64	100.17	43.65	101.68	43.65	103.34	44.40	106.00	44.40
	43	80.24	35.73	94.16	43.90	96.35	44.45	98.08	44.71	99.22	44.98	100.88	45.33	104.12	45.68
110%	5	73.56	13.73	86.36	16.43	99.59	19.30	106.05	20.94	112.48	22.48	128.16	26.30	130.80	25.14
	10	73.56	14.16	86.36	17.12	99.59	20.11	106.05	21.63	112.48	23.15	125.57	26.15	128.03	25.22
	15	73.56	14.84	86.36	17.90	99.59	21.05	106.05	22.57	112.48	24.19	121.40	26.02	124.06	25.63
	20	73.56	15.55	86.36	18.83	99.59	23.13	106.05	25.41	112.48	27.80	117.60	29.23	120.07	29.45
	25	73.56	17.98	86.36	22.65	99.59	27.80	106.05	31.47	110.44	33.39	112.90	33.65	115.36	33.93
	30	73.56	21.37	86.36	26.93	99.59	33.34	106.05	36.16	106.40	36.57	109.64	36.93	112.10	37.20
	35	73.56	25.17	86.36	31.78	99.59	37.61	102.05	40.15	103.39	40.47	105.65	40.84	108.11	41.23
	41	73.56	29.33	86.36	37.08	96.95	41.19	98.46	43.47	99.59	43.37	101.08	43.97	104.12	44.35
	43	73.56	31.71	86.36	39.96	94.49	43.03	96.38	43.96	97.31	44.40	98.79	44.91	101.65	45.26
100%	5	66.64	12.54	78.40	14.76	90.30	17.49	96.00	19.35	102.23	20.03	114.19	22.83	130.94	26.26
	10	66.64	12.73	78.40	15.36	90.30	18.03	96.00	19.39	102.23	20.77	114.19	23.52	127.97	26.13
	15	66.64	13.29	78.40	16.05	90.30	18.85	96.00	20.31	102.23	21.72	114.19	24.61	124.80	26.00
	20	66.64	13.95	78.40	16.83	90.30	20.11	96.00	22.09	102.23	24.13	114.19	28.45	122.00	29.23
	25	66.64	15.77	78.40	19.79	90.30	24.19	96.00	26.56	102.23	28.99	111.53	32.80	117.81	33.06
	30	66.64	18.73	78.40	23.40	90.30	28.78	96.00	31.31	102.23	34.42	107.36	36.69	112.84	36.90
	35	66.64	22.09	78.40	27.73	90.30	33.97	96.00	34.10	101.48	40.09	103.56	40.48	108.05	40.86
	41	66.64	25.70	78.40	32.19	90.30	39.53	96.00	41.38	97.68	43.19	99.77	43.78	101.85	43.48
	43	66.64	28.46	78.40	34.77	90.30	42.44	96.00	43.03	95.22	44.20	97.88	44.56	99.57	44.66

MRVIII R22

Haier
cooling

capacity factor %	outdoor temp.(℃ DB)	indoor temp.(℃ WB)													
		14(℃)		16(℃)		18(℃)		19(℃)		20(℃)		22(℃)		24(℃)	
		TC	PI	TC	PI	TC	PI	TC	PI	TC	PI	TC	PI	TC	PI
		KW	KW	KW	KW	KW	KW	KW	KW	KW	KW	KW	KW	KW	KW
90%	5	60.32	10.97	70.80	13.23	81.56	15.53	86.88	16.59	92.38	17.97	102.81	20.13	113.43	22.55
	10	60.32	11.32	70.80	13.62	81.56	15.98	86.88	17.20	92.38	18.42	102.81	20.89	113.43	23.37
	15	60.32	11.83	70.80	14.23	81.56	16.70	86.88	17.96	92.38	19.29	102.81	21.83	113.43	24.43
	20	60.32	12.40	70.80	14.92	81.56	17.53	86.88	18.96	92.38	20.68	102.81	24.30	113.43	28.17
	25	60.32	13.71	70.80	17.12	81.56	20.81	86.88	22.78	92.38	24.85	102.81	29.21	111.35	32.77
	30	60.32	16.29	70.80	20.33	81.56	24.76	86.88	27.10	92.38	29.56	102.81	34.82	107.56	36.55
	35	60.32	19.18	70.80	23.93	81.56	29.19	86.88	31.99	92.38	34.90	101.48	40.11	103.56	40.47
	41	60.32	22.08	70.80	27.83	81.56	33.92	86.88	36.38	92.38	40.22	97.28	43.65	99.42	43.78
	43	60.32	23.54	70.80	29.97	81.56	36.30	86.88	39.04	92.38	41.27	93.82	43.41	97.33	44.56
80%	5	53.84	9.70	62.64	11.62	72.67	13.58	77.39	14.70	81.76	15.53	91.43	17.64	100.90	19.36
	10	53.84	9.97	62.64	11.95	72.67	13.99	77.39	15.20	81.76	16.09	91.43	18.27	100.90	20.44
	15	53.84	10.38	62.64	12.47	72.67	14.64	77.39	15.72	81.76	16.83	91.43	19.12	100.90	21.39
	20	53.84	10.88	62.64	13.05	72.67	15.31	77.39	16.49	81.76	17.66	91.43	20.44	100.90	24.03
	25	53.84	11.75	62.64	14.57	72.67	17.66	77.39	19.29	81.76	20.98	91.43	24.59	100.90	29.27
	30	53.84	13.96	62.64	17.33	72.67	20.98	77.39	22.96	81.76	24.96	91.43	29.23	100.90	33.84
	35	53.84	16.46	62.64	20.41	72.67	24.76	77.39	27.06	81.76	29.45	91.43	34.51	100.90	40.02
	41	53.84	18.93	62.64	23.98	72.67	28.72	77.39	31.41	81.76	34.24	90.43	39.79	96.55	43.15
	43	53.84	20.92	62.64	24.82	72.67	30.85	77.39	33.72	81.76	36.62	88.03	41.31	93.41	44.05
70%	5	46.72	8.37	55.44	10.01	63.57	11.47	67.34	12.63	71.51	13.35	79.85	15.16	88.39	14.80
	10	46.72	8.62	55.44	10.30	63.57	12.03	67.34	12.92	71.51	13.84	79.85	15.68	88.39	17.57
	15	46.72	8.99	55.44	10.75	63.57	12.60	67.34	13.51	71.51	14.44	79.85	16.38	88.39	18.38
	20	46.72	9.40	55.44	11.25	63.57	13.18	67.34	14.16	71.51	15.16	79.85	17.20	88.39	19.46
	25	46.72	9.93	55.44	12.23	63.57	14.73	67.34	16.05	71.51	17.44	79.85	20.33	88.39	23.39
	30	46.72	11.82	55.44	14.51	63.57	17.53	67.34	19.09	71.51	20.72	79.85	24.17	88.39	27.82
	35	46.72	13.92	55.44	17.12	63.57	20.64	67.34	22.50	71.51	24.41	79.85	28.50	88.39	32.82
	41	46.72	15.87	55.44	19.70	63.57	23.99	67.34	25.97	71.51	28.35	79.85	33.05	88.39	38.35
	43	46.72	16.97	55.44	21.12	63.57	26.24	67.34	28.58	71.51	30.71	77.45	35.21	87.19	40.65
60%	5	40.24	7.14	47.28	8.51	54.45	9.83	57.85	10.66	61.44	11.27	68.47	12.46	75.68	13.89
	10	40.24	7.34	47.28	8.73	54.45	10.14	57.85	11.12	61.44	11.64	68.47	13.16	75.68	14.73
	15	40.24	7.67	47.28	9.10	54.45	10.60	57.85	11.38	61.44	12.17	68.47	13.75	75.68	15.40
	20	40.24	7.99	47.28	9.51	54.45	11.08	57.85	11.90	61.44	12.73	68.47	14.42	75.68	16.14
	25	40.24	8.36	47.28	10.06	54.45	12.03	57.85	13.08	61.44	14.16	68.47	16.42	75.68	18.81
	30	40.24	9.80	47.28	11.99	54.45	16.75	57.85	15.55	61.44	16.78	68.47	19.50	75.68	22.37
	35	40.24	11.53	47.28	14.09	54.45	16.86	57.85	18.31	61.44	19.83	68.47	22.98	75.68	26.37
	41	40.24	13.30	47.28	13.75	54.45	19.37	57.85	20.43	61.44	22.94	68.47	26.70	75.68	30.70
	43	40.24	14.48	47.28	14.61	54.45	20.53	57.85	22.58	61.44	25.00	68.47	28.93	75.68	32.21
50%	5	33.44	5.96	39.48	7.06	45.34	8.14	48.18	8.67	51.02	9.21	57.09	10.32	62.97	11.57
	10	33.44	6.10	39.48	7.21	45.34	8.36	48.18	8.93	51.02	9.51	57.09	10.75	62.97	11.99
	15	33.44	6.34	39.48	7.46	45.34	8.71	48.18	9.32	51.02	9.95	57.09	11.21	62.97	12.53
	20	33.44	6.63	39.48	7.84	45.34	9.10	48.18	9.75	51.02	10.41	57.09	11.75	62.97	13.14
	25	33.44	6.93	39.48	8.19	45.34	9.56	48.18	10.34	51.02	11.16	57.09	12.88	62.97	14.66
	30	33.44	7.95	39.48	9.60	45.34	11.36	48.18	12.31	51.02	13.29	57.09	15.31	62.97	17.44
	35	33.44	9.36	39.48	11.32	45.34	13.42	48.18	14.49	51.02	15.64	57.09	18.03	62.97	20.53
	41	33.44	10.80	39.48	12.70	45.34	15.43	48.18	16.68	51.02	18.08	57.09	21.23	62.97	23.96
	43	33.44	11.99	39.48	13.88	45.34	16.74	48.18	18.71	51.02	19.59	57.09	22.69	62.97	26.49

14) 36HP capacity

cooling

capacity factor %	outdoor temp.(℃ DB)	indoor temp.(℃ WB)													
		14(℃)		16(℃)		18(℃)		19(℃)		20(℃)		22(℃)		24(℃)	
		TC	PI	TC	PI	TC	PI	TC	PI	TC	PI	TC	PI	TC	PI
		KW	KW	KW	KW	KW	KW	KW	KW	KW	KW	KW	KW	KW	KW
130%	5	91.08	17.51	107.46	21.16	123.75	24.61	131.54	27.56	136.33	27.12	139.52	24.61	142.80	23.27
	10	91.08	18.07	107.46	21.80	123.75	25.61	132.34	27.49	133.53	27.01	136.73	25.80	140.00	24.58
	15	91.08	18.91	107.46	22.79	123.75	26.76	128.95	27.45	130.34	27.17	132.34	27.25	136.00	27.34
	20	91.08	19.90	107.46	25.31	122.36	30.66	124.95	30.79	125.15	30.96	128.35	31.23	131.60	31.53
	25	91.08	23.94	107.46	30.43	118.37	34.65	120.56	34.81	121.16	34.99	124.35	35.34	127.40	35.68
	30	91.08	28.37	107.46	34.89	113.97	38.77	115.17	38.89	116.97	39.01	117.96	39.38	123.20	40.22
	35	91.08	33.59	106.50	42.28	110.78	42.74	111.18	43.07	112.78	43.18	115.97	43.61	119.00	44.05
	41	91.08	38.59	104.48	45.65	105.79	46.17	107.39	46.30	108.78	46.41	111.98	46.85	114.60	47.22
	43	91.08	41.73	102.40	46.70	103.39	47.00	105.19	47.47	106.39	47.77	109.78	48.14	111.60	48.50
120%	5	84.42	16.12	99.08	19.08	114.37	21.99	121.76	24.23	129.94	26.15	137.12	26.62	140.20	25.13
	10	84.42	16.46	99.08	19.90	114.37	23.39	121.76	25.13	129.14	26.87	134.53	26.69	137.40	25.57
	15	84.42	17.24	99.08	20.84	114.37	24.49	121.76	26.28	127.55	27.54	130.14	27.06	133.20	27.01
	20	84.42	18.07	99.08	22.49	114.37	27.74	121.76	30.54	123.35	30.75	125.95	31.00	129.00	31.30
	25	84.42	21.37	99.08	27.06	114.37	33.37	117.77	34.60	119.36	34.76	122.16	35.08	124.80	35.38
	30	84.42	25.22	99.08	32.20	111.58	38.43	113.37	38.71	114.97	38.89	117.37	39.19	120.60	39.56
	35	84.42	29.97	99.08	38.02	108.59	42.37	109.38	42.70	110.78	42.81	113.57	43.22	116.40	43.66
	41	84.42	34.62	99.08	43.80	103.59	45.98	105.39	46.00	106.99	46.00	108.78	46.85	111.80	46.85
	43	84.42	37.62	99.08	46.30	101.40	46.87	103.20	47.17	104.39	47.47	106.19	47.87	109.80	48.26
110%	5	77.38	14.43	90.88	17.29	104.79	20.32	111.58	22.05	118.36	23.66	134.93	27.72	138.00	26.48
	10	77.38	14.90	90.88	18.02	104.79	21.19	111.58	22.79	118.36	24.40	132.14	27.56	135.00	26.58
	15	77.38	15.61	90.88	18.85	104.79	22.17	111.58	23.78	118.36	25.50	127.75	27.43	130.80	27.01
	20	77.38	16.37	90.88	19.83	104.79	24.37	111.58	26.78	118.36	29.30	123.75	30.82	126.60	31.05
	25	77.38	18.94	90.88	23.87	104.79	29.30	111.58	33.26	116.17	35.26	118.77	35.53	121.60	35.83
	30	77.38	22.51	90.88	28.39	104.79	35.14	111.58	38.14	111.98	38.57	115.37	38.94	118.20	39.24
	35	77.38	26.53	90.88	33.50	104.79	39.74	107.39	42.35	108.78	42.68	111.18	43.07	114.00	43.49
	41	77.38	30.90	90.88	39.09	102.00	43.57	103.59	45.85	104.79	45.75	106.39	46.40	109.80	46.82
	43	77.38	33.41	90.88	42.10	99.40	45.40	101.40	46.38	102.40	46.88	103.99	47.43	107.20	47.83
100%	5	70.12	13.20	82.50	15.53	95.01	18.41	101.00	20.34	107.59	21.09	120.16	24.03	138.00	27.67
	10	70.12	13.39	82.50	16.16	95.01	18.98	101.00	20.43	107.59	21.87	120.16	24.79	134.80	27.54
	15	70.12	13.99	82.50	16.90	95.01	19.86	101.00	21.39	107.59	22.88	120.16	25.93	131.40	27.40
	20	70.12	14.67	82.50	17.72	95.01	21.19	101.00	23.27	107.59	25.43	120.16	29.99	128.40	30.82
	25	70.12	16.60	82.50	20.84	95.01	25.50	101.00	28.00	107.59	30.57	117.37	34.58	124.00	34.85
	30	70.12	19.72	82.50	24.67	95.01	30.34	101.00	33.03	107.59	36.28	112.98	38.69	118.80	38.91
	35	70.12	23.27	82.50	29.23	95.01	35.82	101.00	36.10	106.79	42.28	108.98	42.70	113.80	43.09
	41	70.12	27.08	82.50	33.91	95.01	41.68	101.00	43.66	102.80	45.57	104.99	46.18	107.40	45.91
	43	70.12	29.97	82.50	36.63	95.01	44.72	101.00	45.40	100.20	46.63	103.00	47.03	105.00	47.18

MRVIII R22

Haier

cooling

capacity factor %	outdoor temp.(℃ DB)	indoor temp.(℃ WB)													
		14(℃)		16(℃)		18(℃)		19(℃)		20(℃)		22(℃)		24(℃)	
		TC	PI	TC	PI	TC	PI	TC	PI	TC	PI	TC	PI	TC	PI
		KW	KW	KW	KW	KW	KW	KW	KW	KW	KW	KW	KW	KW	KW
90%	5	63.46	11.52	74.50	13.91	85.83	16.34	91.42	17.46	97.21	18.90	108.18	21.20	119.60	23.75
	10	63.46	11.90	74.50	14.33	85.83	16.83	91.42	18.11	97.21	19.40	108.18	22.01	119.60	24.63
	15	63.46	12.45	74.50	14.97	85.83	17.59	91.42	18.91	97.21	20.32	108.18	23.00	119.60	25.75
	20	63.46	13.04	74.50	15.71	85.83	18.46	91.42	19.97	97.21	21.78	108.18	25.61	119.60	29.69
	25	63.46	14.42	74.50	18.02	85.83	21.92	91.42	24.01	97.21	26.19	108.18	30.79	117.40	34.56
	30	63.46	17.15	74.50	21.41	85.83	26.09	91.42	28.57	97.21	31.16	108.18	36.73	113.40	38.55
	35	63.46	20.20	74.50	25.22	85.83	30.77	91.42	33.73	97.21	36.80	106.79	42.31	109.20	42.68
	41	63.46	23.26	74.50	29.32	85.83	35.76	91.42	38.27	97.21	42.43	102.40	46.03	104.80	46.18
	43	63.46	24.85	74.50	31.55	85.83	38.26	91.42	41.16	97.21	43.52	98.80	45.73	102.60	47.03
80%	5	56.62	10.19	65.92	12.21	76.45	14.27	81.44	15.45	86.03	16.33	96.21	18.56	106.40	20.40
	10	56.62	10.48	65.92	12.56	76.45	14.72	81.44	15.99	86.03	16.94	96.21	19.24	106.40	21.53
	15	56.62	10.91	65.92	13.11	76.45	15.41	81.44	16.55	86.03	17.72	96.21	20.13	106.40	22.54
	20	56.62	11.44	65.92	13.73	76.45	16.12	81.44	17.36	86.03	18.59	96.21	21.53	106.40	25.35
	25	56.62	12.36	65.92	15.34	76.45	18.59	81.44	20.32	86.03	22.10	96.21	25.91	106.40	30.93
	30	56.62	14.69	65.92	18.25	76.45	22.10	81.44	24.19	86.03	26.30	96.21	30.82	106.40	35.68
	35	56.62	17.33	65.92	21.51	76.45	26.09	81.44	28.52	86.03	31.05	96.21	36.39	106.40	42.20
	41	56.62	19.95	65.92	25.24	76.45	30.26	81.44	33.10	86.03	36.10	95.21	41.98	101.80	45.53
	43	56.62	22.11	65.92	26.19	76.45	32.49	81.44	35.57	86.03	38.67	92.81	43.57	98.40	46.48
70%	5	49.16	8.79	58.32	10.51	66.87	12.06	70.86	13.27	75.25	14.04	84.03	15.94	93.20	15.43
	10	49.16	9.05	58.32	10.82	66.87	12.65	70.86	13.60	75.25	14.56	84.03	16.51	93.20	18.50
	15	49.16	9.44	58.32	11.30	66.87	13.25	70.86	14.21	75.25	15.20	84.03	17.24	93.20	19.35
	20	49.16	9.88	58.32	11.83	66.87	13.87	70.86	14.90	75.25	15.96	84.03	18.11	93.20	20.50
	25	49.16	10.43	58.32	12.86	66.87	15.50	70.86	16.90	75.25	18.37	84.03	21.41	93.20	24.65
	30	49.16	12.43	58.32	15.27	66.87	18.46	70.86	20.11	75.25	21.83	84.03	25.48	93.20	29.33
	35	49.16	14.65	58.32	18.02	66.87	21.74	70.86	23.71	75.25	25.73	84.03	30.04	93.20	34.60
	41	49.16	16.70	58.32	20.73	66.87	25.27	70.86	27.34	75.25	29.87	84.03	34.84	93.20	40.42
	43	49.16	17.85	58.32	22.20	66.87	27.66	70.86	30.11	75.25	32.36	81.63	37.16	92.00	42.92
60%	5	42.32	7.48	49.74	8.93	57.29	10.32	60.88	11.20	64.67	11.84	72.06	13.11	79.80	14.62
	10	42.32	7.70	49.74	9.17	57.29	10.66	60.88	11.68	64.67	12.24	72.06	13.85	79.80	15.50
	15	42.32	8.04	49.74	9.56	57.29	11.14	60.88	11.97	64.67	12.79	72.06	14.47	79.80	16.21
	20	42.32	8.39	49.74	9.99	57.29	11.65	60.88	12.52	64.67	13.39	72.06	15.18	79.80	16.99
	25	42.32	8.78	49.74	10.57	57.29	12.65	60.88	13.76	64.67	14.90	72.06	17.29	79.80	19.81
	30	42.32	10.29	49.74	12.61	57.29	17.50	60.88	16.37	64.67	17.67	72.06	20.54	79.80	23.57
	35	42.32	12.13	49.74	14.83	57.29	17.75	60.88	19.28	64.67	20.89	72.06	24.21	79.80	27.79
	41	42.32	13.98	49.74	14.59	57.29	20.39	60.88	21.55	64.67	24.16	72.06	28.13	79.80	32.35
	43	42.32	15.22	49.74	15.47	57.29	21.65	60.88	23.83	64.67	26.34	72.06	30.47	79.80	34.02
50%	5	35.18	6.24	41.54	7.41	47.71	8.54	50.70	9.09	53.69	9.66	60.08	10.84	66.40	12.16
	10	35.18	6.39	41.54	7.56	47.71	8.78	50.70	9.38	53.69	9.99	60.08	11.30	66.40	12.61
	15	35.18	6.65	41.54	7.82	47.71	9.14	50.70	9.79	53.69	10.45	60.08	11.78	66.40	13.18
	20	35.18	6.95	41.54	8.23	47.71	9.56	50.70	10.25	53.69	10.94	60.08	12.36	66.40	13.82
	25	35.18	7.26	41.54	8.60	47.71	10.04	50.70	10.87	53.69	11.74	60.08	13.55	66.40	15.43
	30	35.18	8.34	41.54	10.09	47.71	11.94	50.70	12.95	53.69	13.99	60.08	16.11	66.40	18.37
	35	35.18	9.83	41.54	11.90	47.71	14.12	50.70	15.25	53.69	16.46	60.08	18.98	66.40	21.62
	41	35.18	11.34	41.54	13.32	47.71	16.22	50.70	17.55	53.69	19.02	60.08	22.33	66.40	25.23
	43	35.18	12.58	41.54	14.56	47.71	17.62	50.70	19.66	53.69	20.61	60.08	23.89	66.40	27.87

15) 38HP capacity

cooling

capacity factor %	outdoor temp.(℃ DB)	indoor temp.(℃ WB)													
		14(℃)		16(℃)		18(℃)		19(℃)		20(℃)		22(℃)		24(℃)	
		TC	PI	TC	PI	TC	PI	TC	PI	TC	PI	TC	PI	TC	PI
		KW	KW	KW	KW	KW	KW	KW	KW	KW	KW	KW	KW	KW	KW
130%	5	96.2	18.47	113.54	22.30	130.76	25.93	139.36	29.02	144.73	28.57	148.56	25.92	151.58	24.56
	10	96.2	19.04	113.54	22.97	130.76	26.97	139.76	28.95	141.10	28.44	144.43	27.17	147.94	25.89
	15	96.2	19.93	113.54	24.01	130.76	28.18	135.59	28.90	137.28	28.61	139.76	28.70	143.71	28.79
	20	96.2	20.97	113.54	26.66	129.32	32.28	131.36	32.42	132.20	32.59	135.54	32.88	139.03	33.19
	25	96.2	25.21	113.54	32.04	124.85	36.47	126.69	36.65	127.98	36.84	131.31	37.20	134.69	37.56
	30	96.2	29.88	113.54	36.67	120.42	40.80	121.76	40.94	123.65	41.07	125.64	41.46	130.36	42.32
	35	96.2	35.36	112.61	44.51	116.59	44.99	117.54	45.34	119.08	45.44	122.41	45.90	125.78	46.36
	41	96.2	40.66	109.58	48.07	111.87	48.62	113.41	48.75	115.10	48.85	118.18	49.30	121.59	49.68
	43	96.2	43.95	107.20	49.15	109.18	49.55	111.07	50.04	112.66	50.44	115.85	50.87	118.60	51.50
120%	5	89.0	16.99	104.64	20.11	120.87	23.19	128.53	25.53	137.82	27.55	145.62	28.04	148.79	26.49
	10	89.0	17.35	104.64	20.97	120.87	24.64	128.53	26.47	136.43	28.30	142.10	28.11	145.15	26.93
	15	89.0	18.17	104.64	21.96	120.87	25.79	128.53	27.67	134.89	29.00	137.67	28.49	140.82	28.45
	20	89.0	19.04	104.64	23.69	120.87	29.22	128.53	32.16	130.31	32.37	133.10	32.64	136.24	32.95
	25	89.0	22.51	104.64	28.49	120.87	35.13	124.30	36.43	126.09	36.60	128.97	36.93	131.90	37.25
	30	89.0	26.57	104.64	33.90	117.98	40.45	119.87	40.75	121.66	40.93	124.10	41.25	127.32	41.64
	35	89.0	31.55	104.64	40.02	114.26	44.59	115.65	44.94	117.09	45.05	119.97	45.49	122.99	45.94
	41	89.0	36.47	104.64	46.09	109.53	48.43	111.17	48.45	112.96	48.45	115.35	49.30	118.45	49.30
	43	89.0	39.64	104.64	48.73	107.19	49.34	108.84	49.64	110.18	49.94	112.56	50.34	116.21	50.74
110%	5	81.5	15.22	96.06	18.23	110.63	21.41	117.74	23.23	125.09	24.94	143.29	29.19	146.70	27.90
	10	81.5	15.71	96.06	18.99	110.63	22.32	117.74	24.01	125.09	25.70	139.66	29.02	142.71	27.99
	15	81.5	16.46	96.06	19.86	110.63	23.36	117.74	25.05	125.09	26.85	134.99	28.88	138.13	28.44
	20	81.5	17.25	96.06	20.90	110.63	25.67	117.74	28.20	125.09	30.86	130.76	32.45	133.80	32.69
	25	81.5	19.95	96.06	25.14	110.63	30.86	117.74	34.96	122.26	37.08	125.05	37.37	128.07	37.68
	30	81.5	23.71	96.06	29.89	110.63	37.01	117.74	40.14	118.43	40.60	121.86	40.99	124.88	41.30
	35	81.5	27.94	96.06	35.27	110.63	41.77	113.41	44.57	114.85	44.92	117.54	45.34	120.55	45.77
	41	81.5	32.55	96.06	41.16	107.49	45.77	109.28	48.26	110.63	48.15	112.66	48.82	116.21	49.25
	43	81.5	35.19	96.06	44.35	104.71	47.77	106.95	48.81	108.19	49.31	110.23	49.87	113.42	50.27
100%	5	74.0	13.91	87.17	16.37	100.28	19.41	106.50	21.46	113.76	22.22	126.98	25.33	145.21	29.14
	10	74.0	14.12	87.17	17.04	100.28	20.00	106.50	21.52	113.76	23.04	126.98	26.11	141.12	29.00
	15	74.0	14.75	87.17	17.81	100.28	20.92	106.50	22.54	113.76	24.10	126.98	27.31	136.94	28.85
	20	74.0	15.47	87.17	18.68	100.28	22.32	106.50	24.51	113.76	26.78	126.98	31.58	133.21	32.45
	25	74.0	17.49	87.17	21.96	100.28	26.85	106.50	29.48	113.76	32.18	124.10	36.41	128.77	36.69
	30	74.0	20.78	87.17	25.97	100.28	31.94	106.50	34.76	113.76	38.20	119.43	40.73	123.69	40.96
	35	74.0	24.51	87.17	30.78	100.28	37.71	106.50	37.90	112.86	44.51	115.20	44.94	118.96	45.36
	41	74.0	28.52	87.17	35.72	100.28	43.88	106.50	45.94	108.64	47.95	110.97	48.61	113.52	48.29
	43	74.0	31.58	87.17	38.59	100.28	47.09	106.50	47.77	105.85	49.07	108.74	49.47	111.08	49.61

MRVIII R22

Haier
cooling

capacity factor %	outdoor temp.(℃ DB)	indoor temp.(℃ WB)													
		14(℃)		16(℃)		18(℃)		19(℃)		20(℃)		22(℃)		24(℃)	
		TC	PI	TC	PI	TC	PI	TC	PI	TC	PI	TC	PI	TC	PI
		KW	KW	KW	KW	KW	KW	KW	KW	KW	KW	KW	KW	KW	KW
90%	5	66.9	12.16	78.69	14.67	90.74	17.23	96.51	18.40	102.62	19.93	114.30	22.33	126.33	25.02
	10	66.9	12.55	78.69	15.11	90.74	17.73	96.51	19.09	102.62	20.44	114.30	23.19	126.33	25.93
	15	66.9	13.13	78.69	15.78	90.74	18.53	96.51	19.93	102.62	21.40	114.30	24.23	126.33	27.12
	20	66.9	13.75	78.69	16.56	90.74	19.45	96.51	21.04	102.62	22.95	114.30	26.97	126.33	31.27
	25	66.9	15.20	78.69	18.99	90.74	23.09	96.51	25.29	102.62	27.58	114.30	32.42	123.98	36.38
	30	66.9	18.07	78.69	22.56	90.74	27.48	96.51	30.08	102.62	32.81	114.30	38.66	119.75	40.58
	35	66.9	21.28	78.69	26.56	90.74	32.40	96.51	35.51	102.62	38.74	112.86	44.53	115.42	44.92
	41	66.9	24.50	78.69	30.88	90.74	37.65	96.51	40.35	102.62	44.66	108.44	48.46	110.49	48.61
	43	66.9	26.14	78.69	33.25	90.74	40.29	96.51	43.33	102.62	45.81	105.15	48.17	108.14	49.47
80%	5	59.4	10.76	69.70	12.88	80.60	15.06	86.06	16.30	90.84	17.22	101.63	19.57	112.53	21.49
	10	59.4	11.05	69.70	13.25	80.60	15.52	86.06	16.86	90.84	17.86	101.63	20.27	112.53	22.68
	15	59.4	11.51	69.70	13.83	80.60	16.24	86.06	17.45	90.84	18.68	101.63	21.21	112.53	23.74
	20	59.4	12.07	69.70	14.48	80.60	16.99	86.06	18.29	90.84	19.59	101.63	22.68	112.53	26.67
	25	59.4	13.03	69.70	16.17	80.60	19.59	86.06	21.40	90.84	23.28	101.63	27.29	112.53	32.51
	30	59.4	15.49	69.70	19.23	80.60	23.28	86.06	25.48	90.84	27.70	101.63	32.45	112.53	37.56
	35	59.4	18.27	69.70	22.65	80.60	27.48	86.06	30.04	90.84	32.69	101.63	38.31	112.53	44.42
	41	59.4	21.01	69.70	26.60	80.60	31.87	86.06	34.86	90.84	38.00	101.13	44.18	107.50	47.90
	43	59.4	23.24	69.70	27.56	80.60	34.23	86.06	37.44	90.84	40.67	99.93	45.86	103.07	48.91
70%	5	51.9	9.28	61.42	11.10	70.35	12.72	74.83	14.01	79.50	14.80	88.85	16.81	98.48	16.37
	10	51.9	9.56	61.42	11.42	70.35	13.34	74.83	14.34	79.50	15.35	88.85	17.40	98.48	19.50
	15	51.9	9.97	61.42	11.92	70.35	13.97	74.83	14.98	79.50	16.02	88.85	18.17	98.48	20.39
	20	51.9	10.43	61.42	12.48	70.35	14.62	74.83	15.71	79.50	16.82	88.85	19.09	98.48	21.59
	25	51.9	11.01	61.42	13.56	70.35	16.34	74.83	17.81	79.50	19.35	88.85	22.56	98.48	25.96
	30	51.9	13.10	61.42	16.09	70.35	19.45	74.83	21.18	79.50	23.00	88.85	26.83	98.48	30.88
	35	51.9	15.44	61.42	18.99	70.35	22.90	74.83	24.97	79.50	27.10	88.85	31.63	98.48	36.43
	41	51.9	17.60	61.42	21.86	70.35	26.62	74.83	28.82	79.50	31.46	88.85	36.69	98.48	42.56
	43	51.9	18.83	61.42	23.42	70.35	29.13	74.83	31.72	79.50	34.08	87.65	39.09	97.88	45.14
60%	5	44.5	7.91	52.42	9.43	60.36	10.90	64.39	11.82	68.51	12.49	76.17	13.82	84.33	15.41
	10	44.5	8.14	52.42	9.68	60.36	11.25	64.39	12.33	68.51	12.91	76.17	14.60	84.33	16.34
	15	44.5	8.50	52.42	10.09	60.36	11.75	64.39	12.62	68.51	13.49	76.17	15.25	84.33	17.08
	20	44.5	8.86	52.42	10.55	60.36	12.28	64.39	13.20	68.51	14.12	76.17	16.00	84.33	17.90
	25	44.5	9.27	52.42	11.15	60.36	13.34	64.39	14.51	68.51	15.71	76.17	18.22	84.33	20.87
	30	44.5	10.86	52.42	13.30	60.36	18.54	64.39	17.25	68.51	18.62	76.17	21.64	84.33	24.83
	35	44.5	12.79	52.42	15.63	60.36	18.70	64.39	20.32	68.51	22.00	76.17	25.50	84.33	29.26
	41	44.5	14.75	52.42	15.29	60.36	21.49	64.39	22.68	68.51	25.46	76.17	29.63	84.33	34.07
	43	44.5	16.06	52.42	16.24	60.36	22.79	64.39	25.07	68.51	27.75	76.17	32.10	84.33	35.77
50%	5	37.1	6.60	43.84	7.83	50.37	9.02	53.60	9.61	56.83	10.20	63.49	11.44	70.19	12.83
	10	37.1	6.76	43.84	7.99	50.37	9.27	53.60	9.90	56.83	10.55	63.49	11.92	70.19	13.30
	15	37.1	7.03	43.84	8.26	50.37	9.65	53.60	10.33	56.83	11.03	63.49	12.43	70.19	13.90
	20	37.1	7.34	43.84	8.69	50.37	10.09	53.60	10.81	56.83	11.54	63.49	13.03	70.19	14.57
	25	37.1	7.68	43.84	9.08	50.37	10.60	53.60	11.46	56.83	12.38	63.49	14.29	70.19	16.26
	30	37.1	8.81	43.84	10.64	50.37	12.60	53.60	13.66	56.83	14.75	63.49	16.98	70.19	19.35
	35	37.1	10.38	43.84	12.55	50.37	14.89	53.60	16.07	56.83	17.35	63.49	20.00	70.19	22.78
	41	37.1	11.98	43.84	14.07	50.37	17.11	53.60	18.51	56.83	20.06	63.49	23.54	70.19	26.58
	43	37.1	13.29	43.84	15.38	50.37	18.57	53.60	20.74	56.83	21.73	63.49	25.17	70.19	29.38

16) 40HP capacity

cooling

capacity factor %	outdoor temp.(℃ DB)	indoor temp.(℃ WB)													
		14(℃)		16(℃)		18(℃)		19(℃)		20(℃)		22(℃)		24(℃)	
		TC	PI	TC	PI	TC	PI	TC	PI	TC	PI	TC	PI	TC	PI
		KW	KW	KW	KW	KW	KW	KW	KW	KW	KW	KW	KW	KW	KW
130%	5	102.0	18.56	120.48	22.59	138.76	26.49	147.90	29.84	153.62	29.21	157.70	26.51	160.87	24.41
	10	102.0	19.37	120.48	23.50	138.76	27.69	148.30	29.77	149.73	29.24	153.26	27.90	156.98	26.56
	15	102.0	20.32	120.48	24.58	138.76	28.97	143.84	29.72	145.65	29.41	148.30	29.42	152.48	29.55
	20	102.0	21.40	120.48	27.36	137.23	33.26	139.36	33.42	140.29	33.59	143.82	33.90	147.51	34.23
	25	102.0	25.85	120.48	33.00	132.47	37.67	134.40	37.84	135.80	38.04	139.33	38.42	142.92	38.80
	30	102.0	30.65	120.48	38.76	127.78	42.28	129.21	42.34	131.22	42.43	133.37	42.79	138.33	44.06
	35	102.0	36.49	119.50	46.09	123.70	46.62	124.73	46.90	126.35	47.10	129.89	47.58	133.46	48.06
	41	102.0	41.55	116.24	49.51	118.71	50.03	120.34	50.27	122.15	50.47	125.40	51.31	129.04	51.79
	43	102.0	45.05	113.70	50.93	115.86	51.49	117.86	52.14	119.57	52.70	122.92	53.30	125.88	54.50
120%	5	94.5	17.19	111.04	20.43	128.26	23.24	136.38	26.00	146.28	28.16	154.57	28.60	157.91	26.71
	10	94.5	17.60	111.04	21.40	128.26	25.23	136.38	27.16	144.77	29.08	150.78	28.87	154.01	27.64
	15	94.5	18.45	111.04	22.43	128.26	26.48	136.38	28.43	143.14	29.83	146.10	29.29	149.42	29.06
	20	94.5	19.37	111.04	24.25	128.26	30.05	136.38	33.12	138.28	33.37	141.24	33.64	144.55	33.97
	25	94.5	23.01	111.04	29.29	128.26	36.23	131.89	37.61	133.80	37.78	136.85	38.15	139.96	38.47
	30	94.5	27.08	111.04	34.94	125.20	41.85	127.21	42.11	129.11	42.31	131.69	42.67	135.09	43.09
	35	94.5	32.51	111.04	41.38	121.22	46.25	122.72	46.54	124.25	46.74	127.31	47.18	130.49	47.66
	41	94.5	37.33	111.04	47.94	116.23	49.67	117.96	49.71	119.87	49.71	122.42	51.31	125.70	51.31
	43	94.5	40.33	111.04	50.45	113.75	51.01	115.48	51.58	116.91	52.14	119.47	52.89	123.32	53.50
110%	5	86.4	15.23	101.94	18.45	117.38	21.79	124.93	23.65	132.74	25.31	152.09	30.01	155.70	28.45
	10	86.4	15.88	101.94	19.31	117.38	22.80	124.93	24.58	132.74	26.35	148.20	29.84	151.43	28.76
	15	86.4	16.64	101.94	20.23	117.38	23.89	124.93	25.63	132.74	27.57	143.24	29.68	146.56	29.24
	20	86.4	17.49	101.94	21.31	117.38	26.34	124.93	28.98	132.74	31.77	138.76	33.43	141.97	33.69
	25	86.4	20.33	101.94	25.76	117.38	31.77	124.93	36.94	129.71	38.88	132.67	39.20	135.86	39.52
	30	86.4	24.29	101.94	30.75	117.38	38.06	124.93	41.50	125.68	42.00	129.31	42.37	132.50	42.72
	35	86.4	28.71	101.94	36.39	117.38	44.18	120.34	46.21	121.87	46.50	124.73	46.90	127.91	47.34
	41	86.4	33.36	101.94	42.41	114.05	48.85	115.96	50.11	117.38	49.91	119.57	50.79	123.32	51.59
	43	86.4	36.08	101.94	45.42	111.10	49.58	113.48	50.77	114.80	51.71	116.98	52.39	120.35	53.14
100%	5	78.6	14.06	92.50	16.51	106.41	19.72	113.00	21.38	120.72	22.55	134.75	25.70	154.04	29.98
	10	78.6	14.21	92.50	17.27	106.41	20.38	113.00	21.99	120.72	23.56	134.75	26.78	149.67	29.83
	15	78.6	14.86	92.50	18.08	106.41	21.35	113.00	23.03	120.72	24.68	134.75	28.05	145.20	29.67
	20	78.6	15.61	92.50	18.99	106.41	22.80	113.00	25.11	120.72	27.48	134.75	32.52	141.20	33.43
	25	78.6	17.75	92.50	22.43	106.41	27.57	113.00	30.32	120.72	33.16	131.69	37.57	136.51	37.89
	30	78.6	21.16	92.50	26.72	106.41	32.90	113.00	36.03	120.72	39.39	126.73	42.07	131.14	42.38
	35	78.6	25.11	92.50	31.70	106.41	38.96	113.00	40.80	119.77	46.09	122.25	46.54	126.15	46.94
	41	78.6	29.13	92.50	36.62	106.41	45.29	113.00	47.66	115.28	49.91	117.76	50.39	120.45	50.55
	43	78.6	32.07	92.50	39.48	106.41	48.31	113.00	49.58	112.32	50.89	115.38	51.64	117.87	52.27

MRVIII R22

Haier
cooling

capacity factor %	outdoor temp.(℃ DB)	indoor temp.(℃ WB)													
		14(℃)		16(℃)		18(℃)		19(℃)		20(℃)		22(℃)		24(℃)	
		TC	PI	TC	PI	TC	PI	TC	PI	TC	PI	TC	PI	TC	PI
		KW	KW	KW	KW	KW	KW	KW	KW	KW	KW	KW	KW	KW	KW
90%	5	71.0	12.01	83.50	14.64	96.29	17.33	102.40	18.59	108.89	20.02	121.29	22.72	134.03	25.49
	10	71.0	12.55	83.50	15.24	96.29	18.01	102.40	19.42	108.89	20.82	121.29	23.72	134.03	26.61
	15	71.0	13.18	83.50	15.94	96.29	18.83	102.40	20.32	108.89	21.84	121.29	24.80	134.03	27.85
	20	71.0	13.83	83.50	16.75	96.29	19.80	102.40	21.46	108.89	23.46	121.29	27.69	134.03	32.20
	25	71.0	15.34	83.50	19.31	96.29	23.61	102.40	25.92	108.89	28.33	121.29	33.42	131.55	37.56
	30	71.0	18.35	83.50	23.07	96.29	28.22	102.40	30.96	108.89	33.81	121.29	40.03	127.06	41.96
	35	71.0	21.72	83.50	27.26	96.29	33.38	102.40	36.65	108.89	40.04	119.77	46.13	122.46	46.50
	41	71.0	25.01	83.50	31.63	96.29	38.81	102.40	40.71	108.89	46.37	115.08	50.11	117.22	50.39
	43	71.0	27.34	83.50	33.80	96.29	41.50	102.40	44.65	108.89	47.41	111.62	49.20	114.73	51.64
80%	5	63.1	10.58	73.96	12.80	85.51	15.03	91.33	16.27	96.39	17.36	107.84	19.79	119.40	22.00
	10	63.1	10.99	73.96	13.30	85.51	15.67	91.33	16.98	96.39	18.13	107.84	20.66	119.40	23.18
	15	63.1	11.47	73.96	13.90	85.51	16.42	91.33	17.70	96.39	18.99	107.84	21.63	119.40	24.30
	20	63.1	12.06	73.96	14.59	85.51	17.22	91.33	18.57	96.39	19.95	107.84	23.18	119.40	27.73
	25	63.1	13.08	73.96	16.36	85.51	19.95	91.33	21.84	96.39	23.82	107.84	28.01	119.40	34.31
	30	63.1	15.65	73.96	19.58	85.51	23.82	91.33	26.13	96.39	28.44	107.84	33.43	119.40	38.80
	35	63.1	18.56	73.96	23.17	85.51	28.22	91.33	30.91	96.39	33.69	107.84	39.59	119.40	45.93
	41	63.1	21.63	73.96	26.91	85.51	32.66	91.33	35.84	96.39	39.21	107.34	45.85	114.05	49.83
	43	63.1	24.65	73.96	28.71	85.51	34.88	91.33	38.83	96.39	42.70	106.14	47.50	109.31	50.96
70%	5	55.1	9.06	65.16	10.92	74.64	12.75	79.40	13.89	84.36	14.86	94.28	16.93	104.49	14.88
	10	55.1	9.43	65.16	11.37	74.64	13.40	79.40	14.43	84.36	15.50	94.28	17.65	104.49	19.85
	15	55.1	9.86	65.16	11.90	74.64	14.05	79.40	15.12	84.36	16.20	94.28	18.45	104.49	20.77
	20	55.1	10.34	65.16	12.49	74.64	14.74	79.40	15.88	84.36	17.05	94.28	19.42	104.49	22.05
	25	55.1	10.94	65.16	13.62	74.64	16.53	79.40	18.08	84.36	19.69	94.28	23.07	104.49	26.62
	30	55.1	13.14	65.16	16.29	74.64	19.80	79.40	21.62	84.36	23.51	94.28	27.53	104.49	31.78
	35	55.1	15.60	65.16	19.31	74.64	23.40	79.40	25.59	84.36	27.81	94.28	32.57	104.49	37.61
	41	55.1	17.80	65.16	22.05	74.64	27.10	79.40	29.26	84.36	32.23	94.28	37.76	104.49	43.84
	43	55.1	18.97	65.16	23.40	74.64	29.91	79.40	32.44	84.36	34.88	93.08	40.77	103.89	47.29
60%	5	47.2	7.61	55.62	9.19	64.04	10.74	68.33	11.68	72.71	12.41	80.83	13.95	89.48	15.65
	10	47.2	7.93	55.62	9.55	64.04	11.20	68.33	12.18	72.71	12.93	80.83	14.70	89.48	16.53
	15	47.2	8.31	55.62	9.98	64.04	11.73	68.33	12.65	72.71	13.53	80.83	15.39	89.48	17.32
	20	47.2	8.69	55.62	10.46	64.04	12.28	68.33	13.24	72.71	14.21	80.83	16.19	89.48	18.18
	25	47.2	9.12	55.62	11.10	64.04	13.40	68.33	14.60	72.71	15.88	80.83	18.51	89.48	21.29
	30	47.2	10.78	55.62	13.35	64.04	17.29	68.33	17.49	72.71	18.96	80.83	22.10	89.48	25.44
	35	47.2	12.82	55.62	15.81	64.04	19.00	68.33	20.71	72.71	22.48	80.83	26.14	89.48	30.10
	41	47.2	14.68	55.62	16.83	64.04	21.82	68.33	23.48	72.71	25.94	80.83	30.30	89.48	34.96
	43	47.2	16.01	55.62	17.48	64.04	23.51	68.33	26.12	72.71	28.35	80.83	32.67	89.48	37.56
50%	5	39.3	6.26	46.52	7.58	53.44	8.76	56.88	9.30	60.31	10.00	67.37	11.38	74.47	12.77
	10	39.3	6.48	46.52	7.77	53.44	9.12	56.88	9.77	60.31	10.46	67.37	11.90	74.47	13.35
	15	39.3	6.76	46.52	8.02	53.44	9.53	56.88	10.24	60.31	10.98	67.37	12.44	74.47	13.99
	20	39.3	7.08	46.52	8.52	53.44	9.98	56.88	10.73	60.31	11.49	67.37	13.08	74.47	14.69
	25	39.3	7.45	46.52	8.91	53.44	10.51	56.88	11.42	60.31	12.39	67.37	14.38	74.47	16.46
	30	39.3	8.63	46.52	10.56	53.44	12.61	56.88	13.73	60.31	14.86	67.37	17.25	74.47	19.69
	35	39.3	10.29	46.52	12.55	53.44	15.02	56.88	16.25	60.31	17.60	67.37	20.38	74.47	23.29
	41	39.3	11.78	46.52	13.68	53.44	17.18	56.88	18.67	60.31	20.26	67.37	23.67	74.47	27.00
	43	39.3	13.10	46.52	15.00	53.44	18.76	56.88	20.60	60.31	21.93	67.37	25.59	74.47	29.64

17) 42HP capacity

cooling

capacity factor %	outdoor temp.(℃ DB)	indoor temp.(℃ WB)													
		14(℃)		16(℃)		18(℃)		19(℃)		20(℃)		22(℃)		24(℃)	
		TC	PI	TC	PI	TC	PI	TC	PI	TC	PI	TC	PI	TC	PI
		KW	KW	KW	KW	KW	KW	KW	KW	KW	KW	KW	KW	KW	KW
130%	5	106.6	19.42	125.82	23.64	144.91	27.73	154.47	31.25	160.45	30.58	164.74	27.76	168.30	25.53
	10	106.6	20.27	125.82	24.60	144.91	29.00	154.87	31.18	156.37	30.62	160.06	29.22	164.20	27.81
	15	106.6	21.27	125.82	25.73	144.91	30.34	150.19	31.13	152.08	30.80	154.87	30.81	159.50	30.95
	20	106.6	22.41	125.82	28.66	143.31	34.84	145.51	35.01	146.50	35.18	150.19	35.51	154.30	35.85
	25	106.6	27.07	125.82	34.57	138.33	39.46	140.33	39.63	141.82	39.85	145.51	40.25	149.50	40.64
	30	106.6	32.10	125.82	40.63	133.45	44.29	134.94	44.36	137.03	44.45	139.32	44.82	144.70	46.17
	35	106.6	38.22	124.80	48.29	129.16	48.84	130.26	49.13	131.95	49.34	135.64	49.85	139.60	50.35
	41	106.6	43.50	121.36	51.86	123.98	52.40	125.67	52.66	127.57	52.87	130.96	53.77	135.00	54.27
	43	106.6	47.18	118.70	53.35	120.99	53.95	123.08	54.64	124.88	55.24	128.36	55.87	131.70	56.50
120%	5	98.6	17.99	115.96	21.39	133.95	24.31	142.42	27.22	152.78	29.49	161.45	29.95	165.20	27.96
	10	98.6	18.42	115.96	22.41	133.95	26.42	142.42	28.44	151.19	30.46	157.47	30.24	161.10	28.94
	15	98.6	19.32	115.96	23.48	133.95	27.73	142.42	29.78	149.49	31.24	152.58	30.68	156.30	30.43
	20	98.6	20.27	115.96	25.39	133.95	31.47	142.42	34.69	144.41	34.95	147.50	35.24	151.20	35.58
	25	98.6	24.10	115.96	30.68	133.95	37.95	137.73	39.40	139.73	39.58	142.92	39.96	146.40	40.30
	30	98.6	28.35	115.96	36.60	130.76	43.84	132.85	44.11	134.84	44.32	137.53	44.70	141.30	45.13
	35	98.6	34.05	115.96	43.34	126.57	48.46	128.16	48.75	129.76	48.96	132.95	49.43	136.50	49.93
	41	98.6	39.09	115.96	50.23	121.39	52.02	123.18	52.06	125.18	52.06	127.86	53.77	131.50	53.77
	43	98.6	42.22	115.96	52.85	118.80	53.44	120.59	54.04	122.09	54.64	124.78	55.44	129.00	56.08
110%	5	90.3	15.93	106.46	19.31	122.58	22.81	130.46	24.76	138.63	26.49	158.86	31.43	162.90	29.78
	10	90.3	16.62	106.46	20.22	122.58	23.88	130.46	25.73	138.63	27.59	154.77	31.25	158.40	30.12
	15	90.3	17.42	106.46	21.18	122.58	25.01	130.46	26.84	138.63	28.88	149.59	31.09	153.30	30.62
	20	90.3	18.31	106.46	22.31	122.58	27.58	130.46	30.35	138.63	33.27	144.91	35.02	148.50	35.29
	25	90.3	21.29	106.46	26.98	122.58	33.27	130.46	38.73	135.44	40.75	138.53	41.08	142.10	41.42
	30	90.3	25.44	106.46	32.21	122.58	39.86	130.46	43.47	131.25	44.00	135.04	44.38	138.60	44.75
	35	90.3	30.06	106.46	38.12	122.58	46.31	125.67	48.42	127.27	48.71	130.26	49.13	133.80	49.59
	41	90.3	34.93	106.46	44.42	119.10	51.23	121.09	52.50	122.58	52.29	124.88	53.22	129.00	54.07
	43	90.3	37.78	106.46	47.56	116.01	51.95	118.50	53.19	119.89	54.19	122.18	54.91	125.90	55.71
100%	5	82.0	14.71	96.60	17.28	111.12	20.64	118.00	22.37	126.07	23.60	140.72	26.90	161.10	31.40
	10	82.0	14.87	96.60	18.08	111.12	21.34	118.00	23.02	126.07	24.67	140.72	28.04	156.50	31.24
	15	82.0	15.55	96.60	18.92	111.12	22.35	118.00	24.11	126.07	25.84	140.72	29.38	151.80	31.07
	20	82.0	16.34	96.60	19.88	111.12	23.88	118.00	26.29	126.07	28.78	140.72	34.06	147.60	35.02
	25	82.0	18.58	96.60	23.48	111.12	28.88	118.00	31.76	126.07	34.73	137.53	39.36	142.70	39.69
	30	82.0	22.16	96.60	27.98	111.12	34.46	118.00	37.75	126.07	41.26	132.35	44.06	137.10	44.40
	35	82.0	26.29	96.60	33.20	111.12	40.81	118.00	42.80	125.08	48.29	127.67	48.75	131.90	49.17
	41	82.0	30.50	96.60	38.35	111.12	47.44	118.00	49.93	120.39	52.29	122.98	52.79	126.00	52.97
	43	82.0	33.57	96.60	41.34	111.12	50.59	118.00	51.95	117.30	53.31	120.49	54.11	123.30	54.79

MRVIII R22

Haier
cooling

capacity factor %	outdoor temp.(℃ DB)	indoor temp.(℃ WB)													
		14(℃)		16(℃)		18(℃)		19(℃)		20(℃)		22(℃)		24(℃)	
		TC	PI	TC	PI	TC	PI	TC	PI	TC	PI	TC	PI	TC	PI
		KW	KW	KW	KW	KW	KW	KW	KW	KW	KW	KW	KW	KW	KW
90%	5	74.1	12.56	87.20	15.32	100.56	18.13	106.94	19.46	113.71	20.94	126.67	23.79	140.20	26.69
	10	74.1	13.13	87.20	15.95	100.56	18.86	106.94	20.33	113.71	21.80	126.67	24.83	140.20	27.87
	15	74.1	13.79	87.20	16.68	100.56	19.71	106.94	21.27	113.71	22.87	126.67	25.97	140.20	29.16
	20	74.1	14.47	87.20	17.53	100.56	20.73	106.94	22.47	113.71	24.56	126.67	29.00	140.20	33.72
	25	74.1	16.06	87.20	20.22	100.56	24.72	106.94	27.14	113.71	29.67	126.67	35.01	137.60	39.35
	30	74.1	19.21	87.20	24.15	100.56	29.56	106.94	32.42	113.71	35.41	126.67	41.93	132.90	43.96
	35	74.1	22.75	87.20	28.55	100.56	34.96	106.94	38.39	113.71	41.94	125.08	48.33	128.10	48.71
	41	74.1	26.19	87.20	33.12	100.56	40.65	106.94	42.61	113.71	48.59	120.19	52.49	122.60	52.79
	43	74.1	28.65	87.20	35.38	100.56	43.47	106.94	46.77	113.71	49.66	116.60	51.51	120.00	54.11
80%	5	65.8	11.07	77.24	13.38	89.30	15.73	95.38	17.02	100.66	18.16	112.62	20.71	124.90	23.04
	10	65.8	11.50	77.24	13.91	89.30	16.40	95.38	17.77	100.66	18.98	112.62	21.63	124.90	24.27
	15	65.8	12.00	77.24	14.54	89.30	17.19	95.38	18.53	100.66	19.88	112.62	22.65	124.90	25.45
	20	65.8	12.62	77.24	15.27	89.30	18.02	95.38	19.44	100.66	20.89	112.62	24.27	124.90	29.06
	25	65.8	13.68	77.24	17.12	89.30	20.89	95.38	22.87	100.66	24.94	112.62	29.34	124.90	35.97
	30	65.8	16.39	77.24	20.49	89.30	24.94	95.38	27.36	100.66	29.79	112.62	35.02	124.90	40.64
	35	65.8	19.43	77.24	24.26	89.30	29.56	95.38	32.37	100.66	35.29	112.62	41.48	124.90	48.12
	41	65.8	22.65	77.24	28.17	89.30	34.20	95.38	37.53	100.66	41.07	112.12	48.04	119.30	52.21
	43	65.8	25.84	77.24	30.09	89.30	36.52	95.38	40.68	100.66	44.76	110.92	49.76	114.30	53.39
70%	5	57.5	9.47	68.04	11.42	77.94	13.34	82.92	14.52	88.10	15.55	98.47	17.71	109.30	15.51
	10	57.5	9.86	68.04	11.89	77.94	14.02	82.92	15.10	88.10	16.22	98.47	18.47	109.30	20.78
	15	57.5	10.31	68.04	12.45	77.94	14.71	82.92	15.83	88.10	16.96	98.47	19.32	109.30	21.75
	20	57.5	10.82	68.04	13.07	77.94	15.43	82.92	16.62	88.10	17.85	98.47	20.33	109.30	23.09
	25	57.5	11.44	68.04	14.25	77.94	17.30	82.92	18.92	88.10	20.62	98.47	24.15	109.30	27.88
	30	57.5	13.75	68.04	17.05	77.94	20.73	82.92	22.64	88.10	24.61	98.47	28.83	109.30	33.28
	35	57.5	16.33	68.04	20.22	77.94	24.51	82.92	26.80	88.10	29.12	98.47	34.12	109.30	39.40
	41	57.5	18.63	68.04	23.08	77.94	28.38	82.92	30.63	88.10	33.75	98.47	39.55	109.30	45.92
	43	57.5	19.85	68.04	24.48	77.94	31.33	82.92	33.97	88.10	36.52	97.27	42.72	108.70	49.56
60%	5	49.2	7.95	58.08	9.60	66.87	11.23	71.36	12.21	75.94	12.98	84.41	14.60	93.60	16.38
	10	49.2	8.29	58.08	9.98	66.87	11.72	71.36	12.74	75.94	13.53	84.41	15.39	93.60	17.30
	15	49.2	8.68	58.08	10.43	66.87	12.28	71.36	13.23	75.94	14.16	84.41	16.11	93.60	18.13
	20	49.2	9.08	58.08	10.94	66.87	12.85	71.36	13.86	75.94	14.87	84.41	16.95	93.60	19.03
	25	49.2	9.53	58.08	11.61	66.87	14.02	71.36	15.28	75.94	16.62	84.41	19.37	93.60	22.30
	30	49.2	11.28	58.08	13.97	66.87	18.04	71.36	18.31	75.94	19.85	84.41	23.14	93.60	26.64
	35	49.2	13.41	58.08	16.55	66.87	19.89	71.36	21.68	75.94	23.54	84.41	27.37	93.60	31.52
	41	49.2	15.36	58.08	17.67	66.87	22.84	71.36	24.60	75.94	27.15	84.41	31.72	93.60	36.61
	43	49.2	16.74	58.08	18.34	66.87	24.62	71.36	27.37	75.94	29.68	84.41	34.20	93.60	39.36
50%	5	41.1	6.54	48.58	7.92	55.81	9.15	59.40	9.72	62.99	10.45	70.36	11.91	77.90	13.36
	10	41.1	6.77	48.58	8.12	55.81	9.53	59.40	10.21	62.99	10.94	70.36	12.45	77.90	13.97
	15	41.1	7.06	48.58	8.38	55.81	9.97	59.40	10.71	62.99	11.49	70.36	13.01	77.90	14.64
	20	41.1	7.40	48.58	8.90	55.81	10.43	59.40	11.22	62.99	12.01	70.36	13.68	77.90	15.37
	25	41.1	7.78	48.58	9.31	55.81	10.99	59.40	11.95	62.99	12.96	70.36	15.05	77.90	17.23
	30	41.1	9.03	48.58	11.05	55.81	13.19	59.40	14.36	62.99	15.55	70.36	18.05	77.90	20.62
	35	41.1	10.76	48.58	13.13	55.81	15.72	59.40	17.01	62.99	18.42	70.36	21.34	77.90	24.38
	41	41.1	12.31	48.58	14.29	55.81	17.98	59.40	19.54	62.99	21.20	70.36	24.77	77.90	28.26
	43	41.1	13.70	48.58	15.68	55.81	19.64	59.40	21.55	62.99	22.95	70.36	26.79	77.90	31.02

18) 44HP capacity

cooling

capacity factor %	outdoor temp.(℃ DB)	indoor temp.(℃ WB)													
		14(℃)		16(℃)		18(℃)		19(℃)		20(℃)		22(℃)		24(℃)	
		TC	PI	TC	PI	TC	PI	TC	PI	TC	PI	TC	PI	TC	PI
		KW	KW	KW	KW	KW	KW	KW	KW	KW	KW	KW	KW	KW	KW
130%	5	111.6	20.38	131.90	24.78	151.92	29.05	162.30	32.71	168.86	32.03	173.77	29.08	177.08	26.82
	10	111.6	21.25	131.90	25.77	151.92	30.36	162.30	32.64	163.94	32.06	167.76	30.59	172.14	29.12
	15	111.6	22.29	131.90	26.95	151.92	31.76	156.83	32.58	159.02	32.24	162.30	32.26	167.21	32.40
	20	111.6	23.47	131.90	30.00	150.28	36.46	151.92	36.63	153.56	36.82	157.38	37.16	161.73	37.52
	25	111.6	28.35	131.90	36.18	144.81	41.28	146.45	41.47	148.64	41.70	152.46	42.11	156.79	42.52
	30	111.6	33.61	131.90	42.41	139.89	46.33	141.53	46.40	143.72	46.50	147.00	46.90	151.86	48.27
	35	111.6	39.99	130.91	50.51	134.98	51.08	136.62	51.39	138.25	51.61	142.08	52.13	146.38	52.66
	41	111.6	45.57	126.46	54.27	130.06	54.85	131.70	55.10	133.88	55.32	137.16	56.21	141.99	56.73
	43	111.6	49.40	123.50	55.80	126.78	56.50	128.96	57.20	131.15	57.90	134.43	58.60	138.70	59.50
120%	5	103.2	18.86	121.52	22.42	140.44	25.52	149.18	28.52	160.66	30.89	169.95	31.37	173.79	29.32
	10	103.2	19.31	121.52	23.47	140.44	27.66	149.18	29.77	158.47	31.88	165.03	31.66	168.85	30.30
	15	103.2	20.25	121.52	24.60	140.44	29.03	149.18	31.17	156.83	32.70	160.11	32.11	163.92	31.87
	20	103.2	21.25	121.52	26.59	140.44	32.94	149.18	36.31	151.37	36.58	154.65	36.88	158.44	37.23
	25	103.2	25.24	121.52	32.11	140.44	39.71	144.27	41.23	146.45	41.41	149.73	41.81	153.50	42.17
	30	103.2	29.70	121.52	38.30	137.16	45.86	139.35	46.15	141.53	46.37	144.27	46.76	148.02	47.21
	35	103.2	35.63	121.52	45.35	132.24	50.68	134.43	50.99	136.07	51.21	139.35	51.69	143.09	52.22
	41	103.2	40.94	121.52	52.52	127.33	54.47	128.96	54.51	131.15	54.51	134.43	56.21	138.15	56.21
	43	103.2	44.24	121.52	55.28	124.59	55.90	126.23	56.50	127.87	57.10	131.15	57.90	135.41	58.56
110%	5	94.4	16.73	111.64	20.25	128.42	23.90	136.62	25.94	145.36	27.77	167.22	32.90	171.60	31.20
	10	94.4	17.42	111.64	21.19	128.42	25.01	136.62	26.95	145.36	28.89	162.30	32.71	166.11	31.53
	15	94.4	18.27	111.64	22.19	128.42	26.19	136.62	28.11	145.36	30.23	156.83	32.54	160.63	32.06
	20	94.4	19.19	111.64	23.37	128.42	28.88	136.62	31.77	145.36	34.82	151.92	36.65	155.70	36.93
	25	94.4	22.30	111.64	28.25	128.42	34.82	136.62	40.43	141.53	42.57	144.81	42.92	148.57	43.27
	30	94.4	26.64	111.64	33.71	128.42	41.73	136.62	45.48	137.71	46.03	141.53	46.43	145.28	46.82
	35	94.4	31.47	111.64	39.88	128.42	48.34	131.70	50.64	133.34	50.95	136.62	51.39	140.35	51.88
	41	94.4	36.58	111.64	46.49	124.59	53.43	126.78	54.90	128.42	54.69	131.15	55.64	135.41	56.49
	43	94.4	39.56	111.64	49.80	121.31	54.33	124.05	55.62	125.69	56.62	128.42	57.36	132.12	58.16
100%	5	86.0	15.43	101.27	18.12	116.40	21.63	123.50	23.49	132.24	24.74	147.54	28.19	168.31	32.87
	10	86.0	15.60	101.27	18.95	116.40	22.36	123.50	24.11	132.24	25.84	147.54	29.36	162.82	32.70
	15	86.0	16.31	101.27	19.83	116.40	23.41	123.50	25.25	132.24	27.06	147.54	30.76	157.34	32.53
	20	86.0	17.14	101.27	20.83	116.40	25.01	123.50	27.53	132.24	30.13	147.54	35.65	152.41	36.65
	25	86.0	19.48	101.27	24.60	116.40	30.23	123.50	33.24	132.24	36.35	144.27	41.18	147.47	41.52
	30	86.0	23.21	101.27	29.29	116.40	36.06	123.50	39.48	132.24	43.18	138.80	46.10	141.99	46.44
	35	86.0	27.53	101.27	34.75	116.40	42.69	123.50	44.60	131.15	50.51	133.88	50.99	137.06	51.44
	41	86.0	31.94	101.27	40.16	116.40	49.64	123.50	52.22	126.23	54.67	128.96	55.22	132.12	55.35
	43	86.0	35.18	101.27	43.30	116.40	52.97	123.50	54.33	122.95	55.76	126.23	56.56	129.38	57.22

capacity factor %	outdoor temp.(℃ DB)	indoor temp.(℃ WB)													
		14(℃)		16(℃)		18(℃)		19(℃)		20(℃)		22(℃)		24(℃)	
		TC	PI	TC	PI	TC	PI	TC	PI	TC	PI	TC	PI	TC	PI
		KW	KW	KW	KW	KW	KW	KW	KW	KW	KW	KW	KW	KW	KW
90%	5	77.6	13.20	91.39	16.08	105.47	19.02	112.02	20.41	119.13	21.98	132.79	24.93	146.93	27.96
	10	77.6	13.79	91.39	16.73	105.47	19.76	112.02	21.30	119.13	22.84	132.79	26.01	146.93	29.17
	15	77.6	14.47	91.39	17.50	105.47	20.66	112.02	22.29	119.13	23.96	132.79	27.19	146.93	30.53
	20	77.6	15.18	91.39	18.38	105.47	21.72	112.02	23.54	119.13	25.72	132.79	30.36	146.93	35.29
	25	77.6	16.84	91.39	21.19	105.47	25.89	112.02	28.42	119.13	31.06	132.79	36.63	144.18	41.17
	30	77.6	20.13	91.39	25.30	105.47	30.94	112.02	33.94	119.13	37.06	132.79	43.86	139.25	45.99
	35	77.6	23.83	91.39	29.89	105.47	36.59	112.02	40.17	119.13	43.88	131.15	50.55	134.32	50.95
	41	77.6	27.44	91.39	34.68	105.47	42.54	112.02	44.69	119.13	50.81	126.23	54.92	128.29	55.22
	43	77.6	29.94	91.39	37.08	105.47	45.49	112.02	48.94	119.13	51.95	122.95	53.96	125.54	56.56
80%	5	68.7	11.64	81.02	14.06	93.44	16.51	100.00	17.87	105.47	19.05	118.04	21.72	131.03	24.13
	10	68.7	12.08	81.02	14.60	93.44	17.20	100.00	18.64	105.47	19.89	118.04	22.66	131.03	25.42
	15	68.7	12.60	81.02	15.26	93.44	18.02	100.00	19.42	105.47	20.83	118.04	23.73	131.03	26.65
	20	68.7	13.25	81.02	16.01	93.44	18.89	100.00	20.38	105.47	21.89	118.04	25.42	131.03	30.38
	25	68.7	14.36	81.02	17.95	93.44	21.89	100.00	23.96	105.47	26.12	118.04	30.72	131.03	37.55
	30	68.7	17.18	81.02	21.47	93.44	26.12	100.00	28.65	105.47	31.19	118.04	36.65	131.03	42.52
	35	68.7	20.36	81.02	25.41	93.44	30.94	100.00	33.88	105.47	36.93	118.04	43.39	131.03	50.34
	41	68.7	23.71	81.02	29.54	93.44	35.81	100.00	39.29	105.47	42.98	118.04	50.24	125.00	54.59
	43	68.7	26.97	81.02	31.45	93.44	38.26	100.00	42.55	105.47	46.75	118.04	52.05	118.97	55.82
70%	5	60.3	9.97	71.14	12.01	81.42	14.00	86.89	15.26	92.35	16.31	103.28	18.58	114.58	16.44
	10	60.3	10.36	71.14	12.49	81.42	14.71	86.89	15.84	92.35	17.01	103.28	19.36	114.58	21.77
	15	60.3	10.84	71.14	13.07	81.42	15.43	86.89	16.60	92.35	17.78	103.28	20.25	114.58	22.79
	20	60.3	11.36	71.14	13.72	81.42	16.18	86.89	17.42	92.35	18.71	103.28	21.30	114.58	24.18
	25	60.3	12.02	71.14	14.96	81.42	18.14	86.89	19.83	92.35	21.60	103.28	25.30	114.58	29.19
	30	60.3	14.43	71.14	17.88	81.42	21.72	86.89	23.71	92.35	25.78	103.28	30.19	114.58	34.84
	35	60.3	17.12	71.14	21.19	81.42	25.67	86.89	28.06	92.35	30.49	103.28	35.71	114.58	41.23
	41	60.3	19.54	71.14	24.20	81.42	29.73	86.89	32.10	92.35	35.34	103.28	41.40	114.58	48.06
	43	60.3	20.82	71.14	25.70	81.42	32.80	86.89	35.58	92.35	38.25	103.28	44.66	114.58	51.79
60%	5	51.4	8.38	60.76	10.11	69.95	11.81	74.87	12.83	79.78	13.63	88.53	15.31	98.13	17.17
	10	51.4	8.72	60.76	10.49	69.95	12.30	74.87	13.39	79.78	14.20	88.53	16.14	98.13	18.14
	15	51.4	9.14	60.76	10.96	69.95	12.89	74.87	13.89	79.78	14.86	88.53	16.90	98.13	19.01
	20	51.4	9.55	60.76	11.49	69.95	13.49	74.87	14.54	79.78	15.60	88.53	17.77	98.13	19.95
	25	51.4	10.02	60.76	12.19	69.95	14.71	74.87	16.03	79.78	17.42	88.53	20.30	98.13	23.36
	30	51.4	11.85	60.76	14.66	69.95	19.08	74.87	19.19	79.78	20.80	88.53	24.24	98.13	27.89
	35	51.4	14.07	60.76	17.35	69.95	20.85	74.87	22.71	79.78	24.65	88.53	28.66	98.13	33.00
	41	51.4	16.13	60.76	18.38	69.95	23.94	74.87	25.73	79.78	28.45	88.53	33.23	98.13	38.33
	43	51.4	17.58	60.76	19.11	69.95	25.76	74.87	28.61	79.78	31.09	88.53	35.84	98.13	41.12
50%	5	43.0	6.90	50.88	8.34	58.47	9.64	62.30	10.24	66.12	10.99	73.77	12.50	81.69	14.03
	10	43.0	7.14	50.88	8.55	58.47	10.02	62.30	10.74	66.12	11.49	73.77	13.07	81.69	14.66
	15	43.0	7.44	50.88	8.83	58.47	10.48	62.30	11.25	66.12	12.06	73.77	13.66	81.69	15.36
	20	43.0	7.80	50.88	9.37	58.47	10.96	62.30	11.79	66.12	12.62	73.77	14.36	81.69	16.13
	25	43.0	8.20	50.88	9.79	58.47	11.55	62.30	12.55	66.12	13.60	73.77	15.78	81.69	18.07
	30	43.0	9.49	50.88	11.61	58.47	13.84	62.30	15.07	66.12	16.31	73.77	18.92	81.69	21.60
	35	43.0	11.31	50.88	13.79	58.47	16.48	62.30	17.84	66.12	19.31	73.77	22.36	81.69	25.54
	41	43.0	12.95	50.88	15.05	58.47	18.87	62.30	20.49	66.12	22.23	73.77	25.99	81.69	29.62
	43	43.0	14.40	50.88	16.50	58.47	20.59	62.30	22.64	66.12	24.07	73.77	28.08	81.69	32.53

20) 46HP capacity

cooling

capacity factor %	outdoor temp.(℃ DB)	indoor temp.(℃ WB)													
		14(℃)		16(℃)		18(℃)		19(℃)		20(℃)		22(℃)		24(℃)	
		TC	PI	TC	PI	TC	PI	TC	PI	TC	PI	TC	PI	TC	PI
		KW	KW	KW	KW	KW	KW	KW	KW	KW	KW	KW	KW	KW	KW
130%	5	117.5	20.47	138.84	25.07	159.91	29.60	170.84	33.53	177.74	32.67	182.92	29.66	186.37	26.66
	10	117.5	21.57	138.84	26.29	159.91	31.07	170.84	33.46	172.57	32.85	176.59	31.32	181.18	29.79
	15	117.5	22.68	138.84	27.52	159.91	32.55	165.09	33.40	167.39	33.04	170.84	32.97	175.98	33.16
	20	117.5	23.90	138.84	30.71	158.19	37.45	159.91	37.63	161.64	37.82	165.66	38.18	170.21	38.55
	25	117.5	28.99	138.84	37.14	152.43	42.47	154.16	42.66	156.46	42.90	160.49	43.33	165.02	43.76
	30	117.5	34.38	138.84	44.50	147.26	47.81	148.98	47.81	151.28	47.87	154.73	48.24	159.83	50.01
	35	117.5	41.13	137.80	52.10	142.08	52.71	143.81	52.95	145.53	53.26	149.56	53.81	154.06	54.36
	41	117.5	46.46	133.12	55.71	136.90	56.26	138.63	56.63	140.93	56.94	144.38	58.23	149.44	58.84
	43	117.5	50.50	130.00	57.58	133.45	58.44	135.75	59.30	138.05	60.17	141.50	61.03	145.98	62.50
120%	5	108.7	19.06	127.92	22.74	147.83	25.56	157.04	28.99	169.12	31.50	178.89	31.93	182.91	29.54
	10	108.7	19.55	127.92	23.90	147.83	28.25	157.04	30.46	166.81	32.67	173.72	32.42	177.71	31.01
	15	108.7	20.53	127.92	25.07	147.83	29.73	157.04	31.93	165.09	33.53	168.54	32.91	172.52	32.48
	20	108.7	21.57	127.92	27.15	147.83	33.77	157.04	37.26	159.34	37.57	162.79	37.88	166.75	38.25
	25	108.7	25.74	127.92	32.91	147.83	40.82	151.86	42.41	154.16	42.60	157.61	43.03	161.56	43.39
	30	108.7	30.22	127.92	39.35	144.38	47.25	146.68	47.50	148.98	47.75	151.86	48.17	155.79	48.66
	35	108.7	36.59	127.92	46.70	139.20	52.34	141.50	52.59	143.23	52.89	146.68	53.38	150.59	53.94
	41	108.7	41.80	127.92	54.36	134.03	55.71	135.75	55.77	138.05	55.77	141.50	58.23	145.40	58.23
	43	108.7	44.93	127.92	57.00	131.15	57.58	132.88	58.44	134.60	59.30	138.05	60.45	142.52	61.32
110%	5	99.3	16.73	117.52	20.47	135.18	24.27	143.81	26.35	153.01	28.13	176.02	33.71	180.60	31.75
	10	99.3	17.59	117.52	21.51	135.18	25.50	143.81	27.52	153.01	29.54	170.84	33.53	174.83	32.30
	15	99.3	18.45	117.52	22.55	135.18	26.72	143.81	28.68	153.01	30.95	165.09	33.34	169.06	32.85
	20	99.3	19.43	117.52	23.78	135.18	29.54	143.81	32.55	153.01	35.73	159.91	37.63	163.87	37.94
	25	99.3	22.68	117.52	28.87	135.18	35.73	143.81	42.41	148.98	44.37	152.43	44.74	156.36	45.11
	30	99.3	27.21	117.52	34.57	135.18	42.78	143.81	46.83	144.96	47.44	148.98	47.81	152.90	48.24
	35	99.3	32.24	117.52	41.00	135.18	50.75	138.63	52.28	140.35	52.53	143.81	52.95	147.71	53.45
	41	99.3	37.39	117.52	47.75	131.15	56.51	133.45	56.75	135.18	56.45	138.05	57.61	142.52	58.84
	43	99.3	40.45	117.52	50.87	127.70	56.14	130.58	57.58	132.30	59.02	135.18	59.88	139.05	61.03
100%	5	90.5	15.57	106.60	18.26	122.52	21.94	130.00	23.41	139.20	25.07	155.31	28.56	177.14	33.71
	10	90.5	15.69	106.60	19.18	122.52	22.74	130.00	24.58	139.20	26.35	155.31	30.03	171.37	33.53
	15	90.5	16.43	106.60	20.10	122.52	23.84	130.00	25.74	139.20	27.64	155.31	31.50	165.60	33.34
	20	90.5	17.28	106.60	21.15	122.52	25.50	130.00	28.13	139.20	30.83	155.31	36.59	160.40	37.63
	25	90.5	19.74	106.60	25.07	122.52	30.95	130.00	34.08	139.20	37.33	151.86	42.35	155.21	42.72
	30	90.5	23.60	106.60	30.03	122.52	37.02	130.00	40.76	139.20	44.37	146.11	47.44	149.44	47.87
	35	90.5	28.13	106.60	35.67	122.52	43.95	130.00	47.50	138.05	52.10	140.93	52.59	144.25	53.02
	41	90.5	32.55	106.60	41.06	122.52	51.05	130.00	53.94	132.88	56.63	135.75	57.00	139.05	57.61
	43	90.5	35.67	106.60	44.19	122.52	54.18	130.00	56.14	129.42	57.58	132.88	58.73	136.17	59.88

MRVIII R22

Haier

cooling

capacity factor %	outdoor temp.(℃ DB)	indoor temp.(℃ WB)													
		14(℃)		16(℃)		18(℃)		19(℃)		20(℃)		22(℃)		24(℃)	
		TC	PI	TC	PI	TC	PI	TC	PI	TC	PI	TC	PI	TC	PI
		KW	KW	KW	KW	KW	KW	KW	KW	KW	KW	KW	KW	KW	KW
90%	5	81.6	13.05	96.20	16.06	111.02	19.12	117.92	20.59	125.40	22.06	139.78	25.31	154.63	28.44
	10	81.6	13.79	96.20	16.85	111.02	20.04	117.92	21.64	125.40	23.23	139.78	26.54	154.63	29.85
	15	81.6	14.53	96.20	17.65	111.02	20.96	117.92	22.68	125.40	24.39	139.78	27.76	154.63	31.26
	20	81.6	15.26	96.20	18.57	111.02	22.06	117.92	23.96	125.40	26.23	139.78	31.07	154.63	36.22
	25	81.6	16.98	96.20	21.51	111.02	26.42	117.92	29.05	125.40	31.81	139.78	37.63	151.75	42.35
	30	81.6	20.41	96.20	25.80	111.02	31.69	117.92	34.81	125.40	38.06	139.78	45.23	146.56	47.38
	35	81.6	24.27	96.20	30.58	111.02	37.57	117.92	41.31	125.40	45.17	138.05	52.16	141.36	52.53
	41	81.6	27.95	96.20	35.43	111.02	43.70	117.92	45.05	125.40	52.53	132.88	56.57	135.02	57.00
	43	81.6	31.14	96.20	37.63	111.02	46.70	117.92	50.26	125.40	53.55	129.42	54.98	132.13	58.73
80%	5	72.3	11.46	85.28	13.97	98.36	16.49	105.27	17.84	111.02	19.18	124.25	21.94	137.90	24.64
	10	72.3	12.01	85.28	14.65	98.36	17.35	105.27	18.75	111.02	20.16	124.25	23.05	137.90	25.93
	15	72.3	12.56	85.28	15.32	98.36	18.20	105.27	19.67	111.02	21.15	124.25	24.15	137.90	27.21
	20	72.3	13.24	85.28	16.12	98.36	19.12	105.27	20.65	111.02	22.25	124.25	25.93	137.90	31.44
	25	72.3	14.40	85.28	18.14	98.36	22.25	105.27	24.39	111.02	26.66	124.25	31.44	137.90	39.35
	30	72.3	17.35	85.28	21.82	98.36	26.66	105.27	29.30	111.02	31.93	124.25	37.63	137.90	43.76
	35	72.3	20.65	85.28	25.93	98.36	31.69	105.27	34.75	111.02	37.94	124.25	44.68	137.90	51.85
	41	72.3	24.33	85.28	29.85	98.36	36.59	105.27	40.27	111.02	44.19	124.25	51.91	131.55	56.51
	43	72.3	28.38	85.28	32.61	98.36	38.92	105.27	43.95	111.02	48.79	124.25	53.69	125.21	57.86
70%	5	63.4	9.75	74.88	11.83	85.71	14.04	91.46	15.14	97.21	16.36	108.72	18.69	120.59	14.95
	10	63.4	10.24	74.88	12.44	85.71	14.77	91.46	15.94	97.21	17.16	108.72	19.61	120.59	22.13
	15	63.4	10.73	74.88	13.05	85.71	15.51	91.46	16.73	97.21	17.96	108.72	20.53	120.59	23.17
	20	63.4	11.28	74.88	13.73	85.71	16.30	91.46	17.59	97.21	18.94	108.72	21.64	120.59	24.64
	25	63.4	11.95	74.88	15.02	85.71	18.33	91.46	20.10	97.21	21.94	108.72	25.80	120.59	29.85
	30	63.4	14.46	74.88	18.08	85.71	22.06	91.46	24.15	97.21	26.29	108.72	30.89	120.59	35.73
	35	63.4	17.28	74.88	21.51	85.71	26.17	91.46	28.68	97.21	31.20	108.72	36.65	120.59	42.41
	41	63.4	19.74	74.88	24.39	85.71	30.22	91.46	32.55	97.21	36.10	108.72	42.47	120.59	49.34
	43	63.4	20.96	74.88	25.68	85.71	33.59	91.46	36.30	97.21	39.04	108.72	46.34	120.59	53.94
60%	5	54.1	8.09	63.96	9.87	73.63	11.65	78.81	12.69	83.98	13.55	93.19	15.45	103.28	17.41
	10	54.1	8.52	63.96	10.36	73.63	12.26	78.81	13.24	83.98	14.22	93.19	16.24	103.28	18.33
	15	54.1	8.95	63.96	10.85	73.63	12.87	78.81	13.91	83.98	14.89	93.19	17.04	103.28	19.25
	20	54.1	9.38	63.96	11.40	73.63	13.48	78.81	14.59	83.98	15.69	93.19	17.96	103.28	20.23
	25	54.1	9.87	63.96	12.14	73.63	14.77	78.81	16.12	83.98	17.59	93.19	20.59	103.28	23.78
	30	54.1	11.77	63.96	14.71	73.63	17.84	78.81	19.43	83.98	21.15	93.19	24.70	103.28	28.50
	35	54.1	14.10	63.96	17.53	73.63	21.15	78.81	23.11	83.98	25.13	93.19	29.30	103.28	33.83
	41	54.1	16.06	63.96	19.92	73.63	24.27	78.81	26.54	83.98	28.93	93.19	33.89	103.28	39.23
	43	54.1	17.53	63.96	20.35	73.63	26.48	78.81	29.66	83.98	31.69	93.19	36.41	103.28	42.90
50%	5	45.2	6.56	53.56	8.09	61.55	9.38	65.58	9.93	69.60	10.79	77.65	12.44	85.97	13.97
	10	45.2	6.86	53.56	8.34	61.55	9.87	65.58	10.60	69.60	11.40	77.65	13.05	85.97	14.71
	15	45.2	7.17	53.56	8.58	61.55	10.36	65.58	11.15	69.60	12.01	77.65	13.67	85.97	15.45
	20	45.2	7.54	53.56	9.19	61.55	10.85	65.58	11.71	69.60	12.56	77.65	14.40	85.97	16.24
	25	45.2	7.97	53.56	9.62	61.55	11.46	65.58	12.50	69.60	13.61	77.65	15.87	85.97	18.26
	30	45.2	9.32	53.56	11.52	61.55	13.85	65.58	15.14	69.60	16.43	77.65	19.18	85.97	21.94
	35	45.2	11.22	53.56	13.79	61.55	16.61	65.58	18.02	69.60	19.55	77.65	22.74	85.97	26.05
	41	45.2	12.75	53.56	14.65	61.55	18.94	65.58	20.65	69.60	22.43	77.65	26.11	85.97	30.03
	43	45.2	14.22	53.56	16.12	61.55	20.78	65.58	22.49	69.60	24.27	77.65	28.50	85.97	32.79

21) 48HP capacity

cooling

capacity factor %	outdoor temp.(℃ DB)	indoor temp.(℃ WB)													
		14(℃)		16(℃)		18(℃)		19(℃)		20(℃)		22(℃)		24(℃)	
		TC	PI	TC	PI	TC	PI	TC	PI	TC	PI	TC	PI	TC	PI
		KW	KW	KW	KW	KW	KW	KW	KW	KW	KW	KW	KW	KW	KW
130%	5	122.04	21.33	144.18	26.12	166.06	30.85	177.41	34.94	184.58	34.04	189.96	30.91	193.80	27.78
	10	122.04	22.48	144.18	27.40	166.06	32.38	177.41	34.87	179.20	34.23	183.38	32.64	188.40	31.04
	15	122.04	23.63	144.18	28.68	166.06	33.92	171.44	34.81	173.83	34.43	177.41	34.36	183.00	34.55
	20	122.04	24.91	144.18	32.00	164.27	39.03	166.06	39.22	167.85	39.41	172.04	39.79	177.00	40.17
	25	122.04	30.21	144.18	38.71	158.30	44.26	160.09	44.45	162.48	44.71	166.66	45.16	171.60	45.60
	30	122.04	35.83	144.18	46.37	152.92	49.82	154.71	49.82	157.10	49.88	160.69	50.27	166.20	52.12
	35	122.04	42.86	143.10	54.29	147.54	54.93	149.34	55.18	151.13	55.50	155.31	56.08	160.20	56.65
	41	122.04	48.41	138.24	58.06	142.17	58.63	143.96	59.02	146.35	59.34	149.93	60.68	155.40	61.32
	43	122.04	52.63	135.00	60.00	138.58	60.90	140.97	61.80	143.36	62.70	146.95	63.60	151.80	64.50
120%	5	112.86	19.86	132.84	23.70	153.52	26.63	163.08	30.21	175.62	32.83	185.77	33.28	190.20	30.79
	10	112.86	20.37	132.84	24.91	153.52	29.44	163.08	31.74	173.23	34.04	180.40	33.79	184.80	32.32
	15	112.86	21.40	132.84	26.12	153.52	30.98	163.08	33.28	171.44	34.94	175.02	34.30	179.40	33.85
	20	112.86	22.48	132.84	28.29	153.52	35.19	163.08	38.83	165.46	39.15	169.05	39.47	173.40	39.86
	25	112.86	26.83	132.84	34.30	153.52	42.54	157.70	44.20	160.09	44.39	163.67	44.84	168.00	45.22
	30	112.86	31.49	132.84	41.01	149.93	49.24	152.32	49.50	154.71	49.76	157.70	50.20	162.00	50.71
	35	112.86	38.13	132.84	48.67	144.56	54.55	146.95	54.80	148.74	55.12	152.32	55.63	156.60	56.21
	41	112.86	43.56	132.84	56.65	139.18	58.06	140.97	58.12	143.36	58.12	146.95	60.68	151.20	60.68
	43	112.86	46.82	132.84	59.40	136.19	60.00	137.99	60.90	139.78	61.80	143.36	63.00	148.20	63.90
110%	5	103.14	17.44	122.04	21.33	140.38	25.29	149.34	27.46	158.89	29.32	182.79	35.13	187.80	33.09
	10	103.14	18.33	122.04	22.42	140.38	26.57	149.34	28.68	158.89	30.79	177.41	34.94	181.80	33.66
	15	103.14	19.23	122.04	23.50	140.38	27.85	149.34	29.89	158.89	32.25	171.44	34.75	175.80	34.23
	20	103.14	20.25	122.04	24.78	140.38	30.79	149.34	33.92	158.89	37.24	166.06	39.22	170.40	39.54
	25	103.14	23.63	122.04	30.08	140.38	37.24	149.34	44.20	154.71	46.24	158.30	46.63	162.60	47.01
	30	103.14	28.36	122.04	36.02	140.38	44.58	149.34	48.80	150.53	49.44	154.71	49.82	159.00	50.27
	35	103.14	33.60	122.04	42.73	140.38	52.89	143.96	54.48	145.75	54.74	149.34	55.18	153.60	55.70
	41	103.14	38.96	122.04	49.76	136.19	58.89	138.58	59.14	140.38	58.83	143.36	60.04	148.20	61.32
	43	103.14	42.15	122.04	53.01	132.61	58.50	135.60	60.00	137.39	61.50	140.38	62.40	144.60	63.60
100%	5	93.96	16.22	110.70	19.03	127.23	22.87	135.00	24.40	144.56	26.12	161.28	29.76	184.20	35.13
	10	93.96	16.35	110.70	19.99	127.23	23.70	135.00	25.61	144.56	27.46	161.28	31.30	178.20	34.94
	15	93.96	17.12	110.70	20.95	127.23	24.85	135.00	26.83	144.56	28.81	161.28	32.83	172.20	34.75
	20	93.96	18.01	110.70	22.04	127.23	26.57	135.00	29.32	144.56	32.13	161.28	38.13	166.80	39.22
	25	93.96	20.57	110.70	26.12	127.23	32.25	135.00	35.51	144.56	38.90	157.70	44.13	161.40	44.52
	30	93.96	24.59	110.70	31.30	127.23	38.58	135.00	42.47	144.56	46.24	151.73	49.44	155.40	49.88
	35	93.96	29.32	110.70	37.17	127.23	45.80	135.00	49.50	143.36	54.29	146.35	54.80	150.00	55.25
	41	93.96	33.92	110.70	42.79	127.23	53.20	135.00	56.21	137.99	59.02	140.97	59.40	144.60	60.04
	43	93.96	37.17	110.70	46.05	127.23	56.46	135.00	58.50	134.40	60.00	137.99	61.20	141.60	62.40

capacity factor %	outdoor temp.(℃ DB)	indoor temp.(℃ WB)													
		14(℃)		16(℃)		18(℃)		19(℃)		20(℃)		22(℃)		24(℃)	
		TC	PI	TC	PI	TC	PI	TC	PI	TC	PI	TC	PI	TC	PI
		KW	KW	KW	KW	KW	KW	KW	KW	KW	KW	KW	KW	KW	KW
90%	5	84.78	13.60	99.90	16.73	115.29	19.93	122.46	21.46	130.22	22.99	145.15	26.38	160.80	29.64
	10	84.78	14.37	99.90	17.56	115.29	20.89	122.46	22.55	130.22	24.21	145.15	27.66	160.80	31.11
	15	84.78	15.14	99.90	18.39	115.29	21.84	122.46	23.63	130.22	25.42	145.15	28.93	160.80	32.57
	20	84.78	15.90	99.90	19.35	115.29	22.99	122.46	24.97	130.22	27.34	145.15	32.38	160.80	37.75
	25	84.78	17.69	99.90	22.42	115.29	27.53	122.46	30.27	130.22	33.15	145.15	39.22	157.80	44.13
	30	84.78	21.27	99.90	26.89	115.29	33.02	122.46	36.28	130.22	39.66	145.15	47.14	152.40	49.37
	35	84.78	25.29	99.90	31.87	115.29	39.15	122.46	43.05	130.22	47.07	143.36	54.35	147.00	54.74
	41	84.78	29.13	99.90	36.92	115.29	45.54	122.46	46.95	130.22	54.74	137.99	58.95	140.40	59.40
	43	84.78	32.45	99.90	39.22	115.29	48.67	122.46	52.37	130.22	55.80	134.40	57.30	137.40	61.20
80%	5	75.06	11.94	88.56	14.56	102.15	17.18	109.31	18.59	115.29	19.99	129.03	22.87	143.40	25.68
	10	75.06	12.52	88.56	15.27	102.15	18.08	109.31	19.54	115.29	21.01	129.03	24.02	143.40	27.02
	15	75.06	13.09	88.56	15.97	102.15	18.97	109.31	20.50	115.29	22.04	129.03	25.17	143.40	28.36
	20	75.06	13.80	88.56	16.80	102.15	19.93	109.31	21.52	115.29	23.19	129.03	27.02	143.40	32.77
	25	75.06	15.01	88.56	18.91	102.15	23.19	109.31	25.42	115.29	27.78	129.03	32.77	143.40	41.01
	30	75.06	18.08	88.56	22.74	102.15	27.78	109.31	30.53	115.29	33.28	129.03	39.22	143.40	45.60
	35	75.06	21.52	88.56	27.02	102.15	33.02	109.31	36.21	115.29	39.54	129.03	46.56	143.40	54.03
	41	75.06	25.36	88.56	31.11	102.15	38.13	109.31	41.96	115.29	46.05	129.03	54.10	136.80	58.89
	43	75.06	29.57	88.56	33.98	102.15	40.56	109.31	45.80	115.29	50.84	129.03	55.95	130.20	60.30
70%	5	65.88	10.16	77.76	12.33	89.00	14.63	94.98	15.78	100.95	17.05	112.90	19.48	125.40	15.58
	10	65.88	10.67	77.76	12.97	89.00	15.39	94.98	16.61	100.95	17.88	112.90	20.44	125.40	23.06
	15	65.88	11.18	77.76	13.60	89.00	16.16	94.98	17.44	100.95	18.71	112.90	21.40	125.40	24.14
	20	65.88	11.75	77.76	14.31	89.00	16.99	94.98	18.33	100.95	19.74	112.90	22.55	125.40	25.68
	25	65.88	12.45	77.76	15.65	89.00	19.10	94.98	20.95	100.95	22.87	112.90	26.89	125.40	31.11
	30	65.88	15.07	77.76	18.84	89.00	22.99	94.98	25.17	100.95	27.40	112.90	32.19	125.40	37.24
	35	65.88	18.01	77.76	22.42	89.00	27.27	94.98	29.89	100.95	32.51	112.90	38.19	125.40	44.20
	41	65.88	20.57	77.76	25.42	89.00	31.49	94.98	33.92	100.95	37.62	112.90	44.26	125.40	51.42
	43	65.88	21.84	77.76	26.76	89.00	35.00	94.98	37.83	100.95	40.69	112.90	48.29	125.40	56.21
60%	5	56.16	8.43	66.42	10.28	76.46	12.14	81.84	13.22	87.21	14.12	96.77	16.10	107.40	18.14
	10	56.16	8.88	66.42	10.79	76.46	12.77	81.84	13.80	87.21	14.82	96.77	16.93	107.40	19.10
	15	56.16	9.33	66.42	11.31	76.46	13.41	81.84	14.50	87.21	15.52	96.77	17.76	107.40	20.06
	20	56.16	9.77	66.42	11.88	76.46	14.05	81.84	15.20	87.21	16.35	96.77	18.71	107.40	21.08
	25	56.16	10.28	66.42	12.65	76.46	15.39	81.84	16.80	87.21	18.33	96.77	21.46	107.40	24.78
	30	56.16	12.26	66.42	15.33	76.46	18.59	81.84	20.25	87.21	22.04	96.77	25.74	107.40	29.70
	35	56.16	14.69	66.42	18.27	76.46	22.04	81.84	24.08	87.21	26.19	96.77	30.53	107.40	35.26
	41	56.16	16.73	66.42	20.76	76.46	25.29	81.84	27.66	87.21	30.15	96.77	35.32	107.40	40.88
	43	56.16	18.27	66.42	21.21	76.46	27.59	81.84	30.91	87.21	33.02	96.77	37.94	107.40	44.71
50%	5	46.98	6.83	55.62	8.43	63.92	9.77	68.10	10.35	72.28	11.24	80.64	12.97	89.40	14.56
	10	46.98	7.15	55.62	8.69	63.92	10.28	68.10	11.05	72.28	11.88	80.64	13.60	89.40	15.33
	15	46.98	7.47	55.62	8.94	63.92	10.79	68.10	11.62	72.28	12.52	80.64	14.24	89.40	16.10
	20	46.98	7.86	55.62	9.58	63.92	11.31	68.10	12.20	72.28	13.09	80.64	15.01	89.40	16.93
	25	46.98	8.30	55.62	10.03	63.92	11.94	68.10	13.03	72.28	14.18	80.64	16.54	89.40	19.03
	30	46.98	9.71	55.62	12.01	63.92	14.43	68.10	15.78	72.28	17.12	80.64	19.99	89.40	22.87
	35	46.98	11.69	55.62	14.37	63.92	17.31	68.10	18.78	72.28	20.37	80.64	23.70	89.40	27.15
	41	46.98	13.29	55.62	15.27	63.92	19.74	68.10	21.52	72.28	23.38	80.64	27.21	89.40	31.30
	43	46.98	14.82	55.62	16.80	63.92	21.65	68.10	23.44	72.28	25.29	80.64	29.70	89.40	34.17

Heat mode:

1) 8HP capacity

heating

capacity factor(%)	outdoor temp.		indoor temp.℃WB											
			16.0		18.0		20.0		21.0		22.0		24.0	
			TC	PI	TC	PI	TC	PI	TC	PI	TC	PI	TC	PI
	℃DB	℃WB	KW	KW	KW	KW	KW	KW	KW	KW	KW	KW	KW	KW
130	-14.7	-15.0	15.9	4.35	15.9	4.61	15.9	4.87	15.9	5.00	15.9	5.13	15.9	5.39
	-12.6	-13.0	16.8	4.62	16.8	4.87	16.8	5.11	16.8	5.23	16.8	5.35	16.8	5.59
	-10.5	-11.0	17.6	4.86	17.6	5.09	17.6	5.32	17.6	5.43	17.6	5.55	17.6	5.76
	-9.5	-10.0	18.1	4.97	18.1	5.19	18.1	5.41	18.1	5.53	18.1	5.64	18.1	5.87
	-8.5	-9.1	18.5	5.06	18.5	5.28	18.5	5.50	18.5	5.61	18.5	5.70	18.5	5.93
	-7.0	-7.6	19.1	5.21	19.1	5.42	19.1	5.63	19.1	5.76	19.1	5.81	19.1	6.04
	-5.0	-5.6	20.0	5.39	20.0	5.58	20.0	5.76	20.0	5.87	20.0	5.98	20.0	6.15
	-3.0	-3.7	20.8	5.54	20.8	5.70	20.8	5.93	20.8	6.04	20.8	6.10	20.8	6.32
	0.0	-0.7	22.1	5.76	22.1	5.93	22.1	6.10	22.1	6.21	22.1	6.27	22.1	6.44
	3.0	2.2	23.5	5.93	23.5	6.10	23.5	6.27	23.5	6.32	23.5	6.44	23.5	6.60
	5.0	4.1	24.2	6.04	24.2	6.21	24.2	6.38	24.2	6.44	24.2	6.55	24.2	6.66
	7.0	6.0	25.0	6.15	25.0	6.32	25.0	6.44	25.0	6.55	25.0	6.60	25.0	6.77
	9.0	7.9	25.8	6.21	25.8	6.38	25.8	6.55	25.8	6.60	25.8	6.66	25.8	6.83
	11.0	9.8	26.7	6.32	26.7	6.44	26.7	6.60	26.7	6.66	26.7	6.77	26.7	6.89
	13.0	11.8	27.5	6.38	27.5	6.55	27.5	6.66	27.5	6.77	27.5	6.83	27.5	6.94
	15.0	13.7	28.3	6.49	28.3	6.60	28.3	6.72	28.3	6.83	28.3	6.89	28.3	6.89
	19.0	14.2	28.3	6.55	28.3	6.68	28.3	6.78	28.3	6.89	28.3	6.95	28.3	6.75
	21.0	15.0	28.3	6.60	28.3	6.74	28.3	6.85	28.3	6.93	28.3	6.84	28.3	6.68
120	-14.7	-15.0	15.9	4.70	15.9	4.94	15.9	5.18	15.9	5.30	15.9	5.41	15.9	5.65
	-12.6	-13.0	16.8	4.95	16.8	5.17	16.8	5.40	16.8	5.51	16.8	5.62	16.8	5.87
	-10.5	-11.0	17.6	5.17	17.6	5.38	17.6	5.59	17.6	5.70	17.6	5.81	17.6	6.04
	-9.5	-10.0	18.1	5.27	18.1	5.48	18.1	5.70	18.1	5.76	18.1	5.87	18.1	6.10
	-8.5	-9.1	18.5	5.36	18.5	5.55	18.5	5.76	18.5	5.87	18.5	5.98	18.5	6.15
	-7.0	-7.6	19.1	5.49	19.1	5.70	19.1	5.87	19.1	5.98	19.1	6.04	19.1	6.27
	-5.0	-5.6	20.0	5.65	20.0	5.81	20.0	6.04	20.0	6.10	20.0	6.21	20.0	6.38
	-3.0	-3.7	20.8	5.81	20.8	5.98	20.8	6.15	20.8	6.21	20.8	6.32	20.8	6.49
	0.0	-0.7	22.1	5.98	22.1	6.15	22.1	6.32	22.1	6.38	22.1	6.49	22.1	6.66
	3.0	2.2	23.5	6.15	23.5	6.32	23.5	6.49	23.5	6.55	23.5	6.60	23.5	6.77
	5.0	4.1	24.2	6.27	24.2	6.38	24.2	6.55	24.2	6.60	24.2	6.72	24.2	6.83
	7.0	6.0	25.0	6.32	25.0	6.49	25.0	6.66	25.0	6.72	25.0	6.77	25.0	6.94
	9.0	7.9	25.8	6.44	25.8	6.55	25.8	6.72	25.8	6.77	25.8	6.83	25.8	7.00
	11.0	9.8	26.7	6.49	26.7	6.66	26.7	6.77	26.6	6.83	26.6	6.89	26.1	6.77
	13.0	11.8	27.5	6.60	27.5	6.72	27.5	6.83	27.5	6.89	27.5	7.00	26.1	6.55
	15.0	13.7	28.3	6.66	28.3	6.77	28.3	6.89	28.3	6.94	28.1	6.83	26.1	6.27
	19.0	14.2	28.3	6.72	28.3	6.77	29.9	6.89	29.9	6.94	29.7	6.72	26.1	6.12
	21.0	15.0	28.3	6.79	28.3	6.77	30.7	6.89	30.7	6.94	30.5	6.51	26.1	6.01
110	-14.7	-15.0	15.9	5.05	15.9	5.27	15.9	5.48	15.9	5.59	15.9	5.70	15.9	5.93
	-12.6	-13.0	16.8	5.28	16.8	5.48	16.8	5.70	16.8	5.81	16.8	5.87	16.8	6.10
	-10.5	-11.0	17.6	5.48	17.6	5.65	17.6	5.87	17.6	5.98	17.6	6.04	17.6	6.27
	-9.5	-10.0	18.1	5.57	18.1	5.76	18.1	5.93	18.1	6.04	18.1	6.15	18.1	6.32
	-8.5	-9.1	18.5	5.65	18.5	5.81	18.5	6.04	18.5	6.10	18.5	6.21	18.5	6.38
	-7.0	-7.6	19.1	5.76	19.1	5.93	19.1	6.10	19.1	6.21	19.1	6.32	19.1	6.49
	-5.0	-5.6	20.0	5.93	20.0	6.10	20.0	6.27	20.0	6.32	20.0	6.44	20.0	6.60
	-3.0	-3.7	20.8	6.04	20.8	6.21	20.8	6.38	20.8	6.44	20.8	6.55	20.8	6.66
	0.0	-0.7	22.1	6.21	22.1	6.38	22.1	6.55	22.1	6.60	22.1	6.66	22.1	6.83
	3.0	2.2	23.5	6.38	23.5	6.55	23.5	6.66	23.5	6.72	23.5	6.83	23.5	6.94
	5.0	4.1	24.2	6.49	24.2	6.60	24.2	6.72	24.2	6.83	24.2	6.89	24.1	6.94
	7.0	6.0	25.0	6.55	25.0	6.66	25.0	6.83	25.0	6.89	25.0	6.94	24.1	6.66
	9.0	7.9	25.8	6.66	25.8	6.77	25.8	6.89	25.8	6.94	25.6	6.94	24.1	6.38
	11.0	9.8	26.7	6.72	26.6	6.83	26.6	6.94	26.6	6.94	25.6	6.66	24.1	6.15

heating

capacity factor(%)	outdoor temp.		indoor temp.℃WB											
			16.0		18.0		20.0		21.0		22.0		24.0	
			TC	PI	TC	PI	TC	PI	TC	PI	TC	PI	TC	PI
	℃DB	℃WB	KW	KW	KW	KW	KW	KW	KW	KW	KW	KW	KW	KW
110	13.0	11.8	27.5	6.77	27.5	6.89	27.5	6.89	26.6	6.66	25.6	6.38	24.1	5.93
	15.0	13.7	28.3	6.83	28.3	6.94	27.5	6.66	26.6	6.44	25.6	6.15	24.1	5.70
	19.0	14.2	28.3	6.39	28.3	6.88	27.5	6.45	26.6	6.18	25.6	5.95	24.1	5.52
	21.0	15.0	28.3	6.44	28.3	6.68	27.5	6.10	26.6	5.99	25.6	5.78	24.1	5.44
100	-14.7	-15.0	15.9	5.40	15.9	5.59	15.9	5.81	15.9	5.87	15.9	5.98	15.9	6.21
	-12.6	-13.0	16.8	5.61	16.8	5.81	16.8	5.98	16.8	6.04	16.8	6.15	16.8	6.32
	-10.5	-11.0	17.6	5.81	17.6	5.98	17.6	6.15	17.6	6.21	17.6	6.32	17.6	6.49
	-9.5	-10.0	18.1	5.87	18.1	6.04	18.1	6.21	18.1	6.32	18.1	6.38	18.1	6.55
	-8.5	-9.1	18.5	5.93	18.5	6.10	18.5	6.27	18.5	6.38	18.5	6.44	18.5	6.60
	-7.0	-7.6	19.1	6.04	19.1	6.21	19.1	6.38	19.1	6.44	19.1	6.55	19.1	6.72
	-5.0	-5.6	20.0	6.21	20.0	6.32	20.0	6.49	20.0	6.55	20.0	6.66	20.0	6.77
	-3.0	-3.7	20.8	6.32	20.8	6.44	20.8	6.60	20.8	6.66	20.8	6.72	20.8	6.89
	0.0	-0.7	22.1	6.49	22.1	6.60	22.1	6.72	22.1	6.83	22.1	6.89	21.8	7.00
	3.0	2.2	23.5	6.60	23.5	6.72	23.5	6.89	23.5	6.94	23.5	7.00	21.8	6.55
	5.0	4.1	24.2	6.66	24.2	6.83	24.2	6.94	24.2	7.00	23.5	6.77	21.8	6.27
	7.0	6.0	25.0	6.77	25.0	6.89	25.0	7.00	24.2	6.72	23.5	6.49	21.8	5.98
	9.0	7.9	25.8	6.83	25.8	6.94	25.0	6.72	24.2	6.49	23.5	6.21	21.8	5.76
	11.0	9.8	26.6	6.89	26.6	6.94	25.0	6.44	24.2	6.21	23.5	5.98	21.8	5.54
	13.0	11.8	27.5	6.94	26.6	6.66	25.0	6.21	24.2	5.98	23.5	5.76	21.8	5.33
	15.0	13.7	28.2	6.83	26.6	6.44	25.0	5.98	24.2	5.76	23.5	5.55	21.8	5.14
	19.0	14.2	28.2	6.65	26.6	6.22	25.0	5.84	24.2	5.52	23.5	5.34	21.8	5.01
	21.0	15.0	28.2	6.44	26.6	5.95	25.0	5.62	24.2	5.44	23.5	5.18	21.8	4.90
90	-14.7	-15.0	15.9	5.76	15.9	5.93	15.9	6.10	15.9	6.21	15.9	6.27	15.9	6.44
	-12.6	-13.0	16.8	5.93	16.8	6.10	16.8	6.27	16.8	6.32	16.8	6.44	16.8	6.60
	-10.5	-11.0	17.6	6.10	17.6	6.27	17.6	6.44	17.6	6.49	17.6	6.55	17.6	6.72
	-9.5	-10.0	18.1	6.15	18.1	6.32	18.1	6.49	18.1	6.55	18.1	6.60	18.1	6.77
	-8.5	-9.1	18.5	6.21	18.5	6.38	18.5	6.55	18.5	6.60	18.5	6.66	18.5	6.83
	-7.0	-7.6	19.1	6.32	19.1	6.49	19.1	6.60	19.1	6.72	19.1	6.77	19.1	6.89
	-5.0	-5.6	20.0	6.44	20.0	6.60	20.0	6.72	20.0	6.77	20.0	6.89	19.6	7.00
	-3.0	-3.7	20.8	6.55	20.8	6.72	20.8	6.83	20.8	6.89	20.8	6.94	19.6	6.72
	0.0	-0.7	22.1	6.72	22.1	6.83	22.1	6.94	21.8	7.00	21.1	6.72	19.6	6.21
	3.0	2.2	23.5	6.83	23.5	6.94	22.5	6.77	21.8	6.55	21.1	6.27	19.6	5.81
	5.0	4.1	24.2	6.89	23.9	6.94	22.5	6.49	21.8	6.27	21.1	5.98	19.6	5.55
	7.0	6.0	25.0	6.94	23.9	6.66	22.5	6.21	21.8	5.98	21.1	5.76	19.6	5.33
	9.0	7.9	25.5	6.83	23.9	6.38	22.5	5.98	21.8	5.76	21.1	5.54	19.6	5.13
	11.0	9.8	25.5	6.55	23.9	6.15	22.5	5.76	21.8	5.53	21.1	5.33	19.6	4.95
	13.0	11.8	25.5	6.32	23.9	5.93	22.5	5.52	21.8	5.32	21.1	5.14	19.6	4.76
	15.0	13.7	25.5	6.10	23.9	5.70	22.5	5.32	21.8	5.14	21.1	4.96	19.6	4.60
	19.0	14.2	25.5	5.95	23.9	5.54	22.5	5.16	21.8	4.99	21.1	4.79	19.6	4.44
	21.0	15.0	25.5	5.73	23.9	5.34	22.5	5.06	21.8	4.83	21.1	4.62	19.6	4.26
80	-14.7	-15.0	15.9	6.10	15.9	6.27	15.9	6.44	15.9	6.49	15.9	6.55	15.9	6.72
	-12.6	-13.0	16.8	6.27	16.8	6.38	16.8	6.55	16.8	6.60	16.8	6.72	16.8	6.83
	-10.5	-11.0	17.6	6.38	17.6	6.55	17.6	6.66	17.6	6.77	17.6	6.83	17.5	6.94
	-9.5	-10.0	18.1	6.49	18.1	6.60	18.1	6.72	18.1	6.83	18.1	6.89	17.5	7.00
	-8.5	-9.1	18.5	6.55	18.5	6.66	18.5	6.77	18.5	6.89	18.5	6.94	17.5	6.89
	-7.0	-7.6	19.1	6.60	19.1	6.72	19.1	6.89	19.1	6.94	18.7	7.00	17.5	6.55
	-5.0	-5.6	20.0	6.72	20.0	6.83	20.0	6.94	19.5	7.00	18.7	6.72	17.5	6.21
	-3.0	-3.7	20.8	6.83	20.8	6.94	20.0	6.89	19.5	6.60	18.7	6.38	17.5	5.87
	0.0	-0.7	22.1	6.94	21.3	6.83	20.0	6.38	19.5	6.15	18.7	5.87	17.5	5.45
	3.0	2.2	22.6	6.77	21.3	6.38	20.0	5.93	19.5	5.70	18.7	5.51	17.5	5.10
	5.0	4.1	22.6	6.49	21.3	6.10	20.0	5.70	19.5	5.48	18.7	5.28	17.5	4.89
	7.0	6.0	22.6	6.21	21.3	5.81	20.0	5.45	19.5	5.26	18.7	5.08	17.5	4.71
	9.0	7.9	22.6	5.98	21.3	5.61	20.0	5.24	19.5	5.06	18.7	4.88	17.5	4.53
	11.0	9.8	22.6	5.76	21.3	5.40	20.0	5.05	19.5	4.88	18.7	4.71	17.5	4.37
	13.0	11.8	22.6	5.54	21.3	5.19	20.0	4.86	19.5	4.70	18.7	4.53	17.5	4.22
	15.0	13.7	22.6	5.35	21.3	4.97	20.0	4.70	19.5	4.54	18.7	4.39	17.5	4.08
	19.0	14.2	22.6	5.16	21.3	4.88	20.0	4.51	19.5	4.37	18.7	4.20	17.5	3.98
	21.0	15.0	22.6	5.02	21.3	4.67	20.0	4.39	19.5	4.23	18.7	4.06	17.5	3.77

heating

capacity factor(%)	outdoor temp.		indoor temp.℃WB											
			16.0		18.0		20.0		21.0		22.0		24.0	
			TC	PI	TC	PI	TC	PI	TC	PI	TC	PI	TC	PI
	℃DB	℃WB	KW	KW	KW	KW	KW	KW	KW	KW	KW	KW	KW	KW
70	-14.7	-15.0	15.9	6.44	15.9	6.60	15.9	6.72	15.9	6.77	15.9	6.83	15.3	7.00
	-12.6	-13.0	16.8	6.60	16.8	6.72	16.8	6.83	16.8	6.89	16.5	7.00	15.3	6.72
	-10.5	-11.0	17.6	6.72	17.6	6.83	17.5	6.94	16.9	7.00	16.5	6.77	15.3	6.27
	-9.5	-10.0	18.1	6.77	18.1	6.89	17.5	7.00	16.9	6.83	16.5	6.55	15.3	6.04
	-8.5	-9.1	18.5	6.83	18.5	6.94	17.5	6.89	16.9	6.66	16.5	6.38	15.3	5.93
	-7.0	-7.6	19.1	6.89	18.6	7.00	17.5	6.60	16.9	6.32	16.5	6.10	15.3	5.65
	-5.0	-5.6	19.7	7.00	18.6	6.66	17.5	6.21	16.9	5.98	16.5	5.76	15.3	5.35
	-3.0	-3.7	19.7	6.77	18.6	6.32	17.5	5.93	16.9	5.70	16.5	5.49	15.3	5.09
	0.0	-0.7	19.7	6.27	18.6	5.87	17.5	5.48	16.9	5.29	16.5	5.10	15.3	4.73
	3.0	2.2	19.7	5.87	18.6	5.48	17.5	5.12	16.9	4.95	16.5	4.78	15.3	4.43
	5.0	4.1	19.7	5.60	18.6	5.26	17.5	4.92	16.9	4.75	16.5	4.58	15.3	4.26
	7.0	6.0	19.7	5.37	18.6	5.05	17.5	4.73	16.9	4.57	16.5	4.41	15.3	4.10
	9.0	7.9	19.7	5.17	18.6	4.85	17.5	4.55	16.9	4.40	16.5	4.25	15.3	3.96
	11.0	9.8	19.7	4.98	18.6	4.68	17.5	4.39	16.9	4.25	16.5	4.07	15.3	3.82
	13.0	11.8	19.7	4.80	18.6	4.51	17.5	4.23	16.9	4.10	16.5	3.96	15.3	3.69
	15.0	13.7	19.7	4.63	18.6	4.36	17.5	4.10	16.9	3.96	16.5	3.83	15.3	3.58
	19.0	14.2	19.7	4.40	18.6	4.25	17.5	3.99	16.9	3.78	16.5	3.62	15.3	3.43
	21.0	15.0	19.7	4.25	18.6	4.04	17.5	3.81	16.9	3.61	16.5	3.44	15.3	3.25
60	-14.7	-15.0	15.9	6.77	15.9	6.89	15.0	7.00	14.5	6.77	14.0	6.55	13.1	6.04
	-12.6	-13.0	16.8	6.89	16.0	7.00	15.0	6.55	14.5	6.32	14.0	6.10	13.1	5.63
	-10.5	-11.0	16.9	7.00	16.0	6.60	15.0	6.15	14.5	5.93	14.0	5.70	13.1	5.28
	-9.5	-10.0	16.9	6.83	16.0	6.38	15.0	5.98	14.5	5.76	14.0	5.54	13.1	5.13
	-8.5	-9.1	16.9	6.66	16.0	6.21	15.0	5.81	14.5	5.59	14.0	5.39	13.1	5.00
	-7.0	-7.6	16.9	6.32	16.0	5.93	15.0	5.55	14.5	5.35	14.0	5.17	13.1	4.79
	-5.0	-5.6	16.9	5.98	16.0	5.62	15.0	5.25	14.5	5.07	14.0	4.89	13.1	4.54
	-3.0	-3.7	16.9	5.70	16.0	5.34	15.0	5.00	14.5	4.83	14.0	4.66	13.1	4.33
	0.0	-0.7	16.9	5.28	16.0	4.96	15.0	4.65	14.5	4.49	14.0	4.34	13.1	4.04
	3.0	2.2	16.9	4.95	16.0	4.65	15.0	4.36	14.5	4.22	14.0	4.08	13.1	3.80
	5.0	4.1	16.9	4.75	16.0	4.47	15.0	4.19	14.5	4.05	14.0	3.92	13.1	3.65
	7.0	6.0	16.9	4.56	16.0	4.30	15.0	4.04	14.5	3.91	14.0	3.78	13.1	3.52
	9.0	7.9	16.9	4.40	16.0	4.14	15.0	3.89	14.5	3.77	14.0	3.65	13.1	3.40
	11.0	9.8	16.9	4.25	16.0	4.00	15.0	3.76	14.5	3.64	14.0	3.52	13.1	3.30
	13.0	11.8	16.9	4.09	16.0	3.86	15.0	3.63	14.5	3.52	14.0	3.41	13.1	3.19
	15.0	13.7	16.9	3.96	16.0	3.74	15.0	3.52	14.5	3.41	14.0	3.30	13.1	3.09
	19.0	14.2	16.9	3.85	16.0	3.56	15.0	3.41	14.5	3.31	14.0	3.18	13.1	2.96
	21.0	15.0	16.9	3.69	16.0	3.46	15.0	3.27	14.5	3.20	14.0	3.08	13.1	2.85
50	-14.7	-15.0	14.1	6.55	13.3	6.15	12.5	5.76	12.1	5.54	11.7	5.34	10.9	4.95
	-12.6	-13.0	14.1	6.15	13.3	5.76	12.5	5.36	12.1	5.18	11.7	5.00	10.9	4.63
	-10.5	-11.0	14.1	5.76	13.3	5.39	12.5	5.04	12.1	4.87	11.7	4.70	10.9	4.36
	-9.5	-10.0	14.1	5.57	13.3	5.22	12.5	4.89	12.1	4.73	11.7	4.56	10.9	4.24
	-8.5	-9.1	14.1	5.42	13.3	5.09	12.5	4.76	12.1	4.60	11.7	4.44	10.9	4.13
	-7.0	-7.6	14.1	5.19	13.3	4.88	12.5	4.57	12.1	4.41	11.7	4.27	10.9	3.97
	-5.0	-5.6	14.1	4.92	13.3	4.62	12.5	4.34	12.1	4.19	11.7	4.05	10.9	3.78
	-3.0	-3.7	14.1	4.69	13.3	4.41	12.5	4.14	12.1	4.00	11.7	3.87	10.9	3.61
	0.0	-0.7	14.1	4.36	13.3	4.11	12.5	3.86	12.1	3.74	11.7	3.62	10.9	3.38
	3.0	2.2	14.1	4.09	13.3	3.86	12.5	3.64	12.1	3.52	11.7	3.41	10.9	3.19
	5.0	4.1	14.1	3.94	13.3	3.72	12.5	3.50	12.1	3.39	11.7	3.16	10.9	3.08
	7.0	6.0	14.1	3.79	13.3	3.58	12.5	3.38	12.1	3.27	11.7	3.17	10.9	2.98
	9.0	7.9	14.1	3.66	13.3	3.46	12.5	3.26	12.1	3.17	11.7	3.07	10.9	2.88
	11.0	9.8	14.1	3.54	13.3	3.35	12.5	3.16	12.1	3.07	11.7	2.98	10.9	2.79
	13.0	11.8	14.1	3.43	13.3	3.24	12.5	3.06	12.1	2.97	11.7	2.88	10.9	2.70
	15.0	13.7	14.1	3.32	13.3	3.14	12.5	2.97	12.1	2.88	11.7	2.79	10.9	2.63
	19.0	14.2	14.1	3.22	13.3	3.02	12.5	2.87	12.1	2.76	11.7	2.70	10.9	2.52
	21.0	15.0	14.1	3.01	13.3	2.94	12.5	2.79	12.1	2.64	11.7	2.60	10.9	2.42

2) 10HP capacity

heating

capacity factor(%)	outdoor temp.		indoor temp.℃WB											
			16.0		18.0		20.0		21.0		22.0		24.0	
			TC	PI	TC	PI	TC	PI	TC	PI	TC	PI	TC	PI
	℃DB	℃WB	KW	KW	KW	KW	KW	KW	KW	KW	KW	KW	KW	KW
130	-14.7	-15.0	20.1	5.97	20.1	6.33	20.1	6.67	20.0	6.85	20.0	7.03	20.0	7.39
	-12.6	-13.0	21.1	6.34	21.1	6.67	21.1	7.01	21.1	7.17	21.1	7.34	21.1	7.66
	-10.5	-11.0	22.2	6.67	22.2	6.98	22.2	7.29	22.2	7.45	22.2	7.61	22.2	7.90
	-9.5	-10.0	22.8	6.82	22.8	7.12	22.8	7.42	22.8	7.58	22.8	7.73	22.8	8.05
	-8.5	-9.1	23.3	6.94	23.3	7.25	23.3	7.54	23.3	7.69	23.3	7.82	23.3	8.13
	-7.0	-7.6	24.2	7.15	24.2	7.43	24.2	7.72	24.2	7.90	24.2	7.97	24.2	8.28
	-5.0	-5.6	25.2	7.39	25.2	7.66	25.2	7.90	25.2	8.05	25.2	8.21	25.2	8.44
	-3.0	-3.7	26.2	7.60	26.2	7.82	26.2	8.13	26.2	8.28	26.2	8.36	26.2	8.67
	0.0	-0.7	27.9	7.90	27.9	8.13	27.9	8.36	27.9	8.52	27.9	8.59	27.9	8.83
	3.0	2.2	29.3	8.13	29.3	8.36	29.3	8.59	29.3	8.67	29.3	8.83	29.3	9.06
	5.0	4.1	30.5	8.28	30.5	8.52	30.5	8.75	30.5	8.83	30.5	8.98	30.5	9.14
	7.0	6.0	31.5	8.44	31.5	8.67	31.5	8.83	31.5	8.98	31.5	9.06	31.5	9.29
	9.0	7.9	32.6	8.52	32.5	8.75	32.5	8.98	32.5	9.06	32.5	9.14	32.5	9.37
	11.0	9.8	33.6	8.67	33.6	8.83	33.6	9.06	33.6	9.14	33.6	9.29	33.6	9.45
	13.0	11.8	34.7	8.75	34.7	8.98	34.7	9.14	34.7	9.29	34.7	9.37	34.7	9.52
	15.0	13.7	35.7	8.90	35.7	9.06	35.7	9.21	35.7	9.37	35.7	9.45	35.7	9.45
	19.0	14.2	35.7	8.98	35.7	9.15	35.7	9.30	35.7	9.45	35.7	9.53	35.7	9.26
	21.0	15.0	35.7	9.05	35.7	9.24	35.7	9.39	35.7	9.50	35.7	9.38	35.7	9.16
120	-14.7	-15.0	20.1	6.45	20.0	6.77	20.0	7.10	20.0	7.26	20.0	7.42	20.0	7.74
	-12.6	-13.0	21.1	6.79	21.1	7.09	21.1	7.40	21.1	7.56	21.1	7.71	21.1	8.05
	-10.5	-11.0	22.2	7.09	22.2	7.38	22.2	7.66	22.2	7.82	22.2	7.97	22.2	8.28
	-9.5	-10.0	22.8	7.23	22.8	7.51	22.8	7.82	22.8	7.90	22.8	8.05	22.8	8.36
	-8.5	-9.1	23.3	7.35	23.3	7.62	23.3	7.90	23.3	8.05	23.3	8.21	23.3	8.44
	-7.0	-7.6	24.2	7.53	24.2	7.82	24.2	8.05	24.2	8.21	24.2	8.28	24.2	8.59
	-5.0	-5.6	25.2	7.74	25.2	7.97	25.2	8.28	25.2	8.36	25.2	8.52	25.2	8.75
	-3.0	-3.7	26.2	7.97	26.2	8.21	26.2	8.44	26.2	8.52	26.2	8.67	26.2	8.90
	0.0	-0.7	27.9	8.21	27.9	8.44	27.9	8.67	27.9	8.75	27.9	8.90	27.9	9.14
	3.0	2.2	29.3	8.44	29.3	8.67	29.3	8.90	29.3	8.98	29.3	9.06	29.3	9.29
	5.0	4.1	30.5	8.59	30.5	8.75	30.5	8.98	30.5	9.06	30.5	9.21	30.5	9.37
	7.0	6.0	31.5	8.67	31.5	8.90	31.5	9.14	31.5	9.21	31.5	9.29	31.5	9.52
	9.0	7.9	32.5	8.83	32.5	8.98	32.5	9.21	32.5	9.29	32.5	9.37	32.5	9.60
	11.0	9.8	33.6	8.90	33.6	9.14	33.6	9.29	33.6	9.37	33.6	9.45	32.9	9.29
	13.0	11.8	34.7	9.06	34.7	9.21	34.7	9.37	34.7	9.45	34.7	9.60	32.9	8.98
	15.0	13.7	35.7	9.14	35.7	9.29	35.7	9.45	35.7	9.52	35.7	9.37	32.9	8.59
	19.0	14.2	35.7	9.21	35.7	9.37	35.7	9.46	35.7	9.44	35.7	9.21	32.9	8.39
	21.0	15.0	35.7	9.31	35.7	9.44	35.7	9.51	35.7	9.36	35.7	8.93	32.9	8.24
110	-14.7	-15.0	20.0	6.92	20.0	7.22	20.0	7.51	20.0	7.66	20.0	7.82	20.0	8.13
	-12.6	-13.0	21.1	7.24	21.1	7.52	21.1	7.82	21.1	7.97	21.1	8.05	21.1	8.36
	-10.5	-11.0	22.2	7.51	22.2	7.74	22.2	8.05	22.2	8.21	22.2	8.28	22.2	8.59
	-9.5	-10.0	22.8	7.64	22.8	7.90	22.8	8.13	22.8	8.28	22.8	8.44	22.8	8.67
	-8.5	-9.1	23.3	7.74	23.3	7.97	23.3	8.28	23.3	8.36	23.3	8.52	23.3	8.75
	-7.0	-7.6	24.2	7.90	24.2	8.13	24.2	8.36	24.2	8.52	24.2	8.67	24.2	8.90
	-5.0	-5.6	25.2	8.13	25.2	8.36	25.2	8.59	25.2	8.67	25.2	8.83	25.2	9.06
	-3.0	-3.7	26.2	8.28	26.2	8.52	26.2	8.75	26.2	8.83	26.2	8.98	26.2	9.14
	0.0	-0.7	27.9	8.52	27.8	8.75	27.8	8.98	27.8	9.06	27.8	9.14	27.8	9.37
	3.0	2.2	29.3	8.75	29.3	8.98	29.3	9.14	29.3	9.21	29.3	9.37	29.3	9.52
	5.0	4.1	30.5	8.90	30.5	9.06	30.5	9.21	30.5	9.37	30.5	9.45	30.2	9.52
	7.0	6.0	31.5	8.98	31.5	9.14	31.5	9.37	31.5	9.45	31.5	9.52	30.2	9.14
	9.0	7.9	32.5	9.14	32.5	9.29	32.5	9.45	32.5	9.52	32.3	9.52	30.2	8.75
	11.0	9.8	33.6	9.21	33.6	9.37	33.6	9.52	33.5	9.52	32.3	9.14	30.2	8.44

heating

capacity factor(%)	outdoor temp.		indoor temp.℃WB											
			16.0		18.0		20.0		21.0		22.0		24.0	
			TC	PI	TC	PI	TC	PI	TC	PI	TC	PI	TC	PI
	℃DB	℃WB	KW	KW	KW	KW	KW	KW	KW	KW	KW	KW	KW	KW
110	13.0	11.8	34.7	9.29	34.7	9.45	34.7	9.45	33.5	9.14	32.3	8.75	30.2	8.13
	15.0	13.7	35.7	9.37	35.7	9.52	34.7	9.14	33.5	8.83	32.3	8.44	30.2	7.82
	19.0	14.2	35.7	8.76	35.7	9.44	34.7	8.84	33.5	8.47	32.3	8.15	30.2	7.56
	21.0	15.0	35.7	8.83	35.7	9.16	34.7	8.37	33.5	8.21	32.3	7.93	30.2	7.45
100	-14.7	-15.0	20.0	7.40	20.0	7.67	20.0	7.97	20.0	8.05	20.0	8.21	20.0	8.52
	-12.6	-13.0	21.1	7.69	21.1	7.97	21.1	8.21	21.1	8.28	21.1	8.44	21.1	8.67
	-10.5	-11.0	22.2	7.97	22.2	8.21	22.2	8.44	22.2	8.52	22.2	8.67	22.2	8.90
	-9.5	-10.0	22.8	8.05	22.8	8.28	22.8	8.52	22.8	8.67	22.8	8.75	22.8	8.98
	-8.5	-9.1	23.3	8.13	23.3	8.36	23.3	8.59	23.3	8.75	23.3	8.83	23.3	9.06
	-7.0	-7.6	24.2	8.28	24.2	8.52	24.2	8.75	24.2	8.83	24.2	8.98	24.2	9.21
	-5.0	-5.6	25.2	8.52	25.2	8.67	25.2	8.90	25.2	8.98	25.2	9.14	25.2	9.29
	-3.0	-3.7	26.2	8.67	26.2	8.83	26.2	9.06	26.2	9.14	26.2	9.21	26.2	9.45
	0.0	-0.7	27.8	8.90	27.8	9.06	27.8	9.21	27.8	9.37	27.8	9.45	27.5	9.60
	3.0	2.2	29.3	9.06	29.3	9.21	29.3	9.45	29.3	9.52	29.3	9.60	27.5	8.98
	5.0	4.1	30.5	9.14	30.5	9.37	30.5	9.52	30.5	9.60	29.5	9.29	27.5	8.59
	7.0	6.0	31.5	9.29	31.5	9.45	31.5	9.60	30.5	9.21	29.5	8.90	27.5	8.21
	9.0	7.9	32.5	9.37	32.5	9.52	31.5	9.21	30.5	8.90	29.5	8.52	27.5	7.90
	11.0	9.8	33.6	9.45	33.5	9.52	31.5	8.83	30.5	8.52	29.5	8.21	27.5	7.59
	13.0	11.8	34.7	9.52	33.5	9.14	31.5	8.52	30.5	8.21	29.5	7.90	27.5	7.31
	15.0	13.7	35.5	9.37	33.5	8.83	31.5	8.21	30.5	7.90	29.5	7.62	27.5	7.05
	19.0	14.2	35.5	9.12	33.5	8.52	31.5	8.00	30.5	7.57	29.5	7.32	27.5	6.86
	21.0	15.0	35.5	8.83	33.5	8.15	31.5	7.70	30.5	7.45	29.5	7.10	27.5	6.71
90	-14.7	-15.0	20.0	7.90	20.0	8.13	20.0	8.36	20.0	8.52	20.0	8.59	20.0	8.83
	-12.6	-13.0	21.1	8.13	21.1	8.36	21.1	8.59	21.1	8.67	21.1	8.83	21.1	9.06
	-10.5	-11.0	22.2	8.36	22.2	8.59	22.2	8.83	22.2	8.90	22.2	8.98	22.2	9.21
	-9.5	-10.0	22.8	8.44	22.8	8.67	22.8	8.90	22.8	8.98	22.8	9.06	22.8	9.29
	-8.5	-9.1	23.3	8.52	23.3	8.75	23.3	8.98	23.3	9.06	23.3	9.14	23.3	9.37
	-7.0	-7.6	24.2	8.67	24.2	8.90	24.2	9.06	24.2	9.21	24.2	9.29	24.1	9.45
	-5.0	-5.6	25.2	8.83	25.2	9.06	25.2	9.21	25.2	9.29	25.2	9.45	24.6	9.60
	-3.0	-3.7	26.2	8.98	26.2	9.21	26.2	9.37	26.2	9.45	26.2	9.52	24.6	9.21
	0.0	-0.7	27.8	9.21	27.8	9.37	27.8	9.52	27.3	9.60	26.5	9.21	24.6	8.52
	3.0	2.2	29.3	9.37	29.3	9.52	28.3	9.29	27.3	8.98	26.5	8.59	24.6	7.97
	5.0	4.1	30.5	9.45	30.3	9.52	28.3	8.90	27.3	8.59	26.5	8.21	24.6	7.62
	7.0	6.0	31.5	9.52	30.3	9.14	28.3	8.52	27.3	8.21	26.5	7.90	24.6	7.32
	9.0	7.9	32.0	9.37	30.3	8.75	28.3	8.21	27.3	7.90	26.5	7.60	24.6	7.04
	11.0	9.8	32.0	8.98	30.3	8.44	28.3	7.90	27.3	7.59	26.5	7.32	24.6	6.78
	13.0	11.8	32.0	8.67	30.3	8.13	28.3	7.56	27.3	7.30	26.5	7.05	24.6	6.53
	15.0	13.7	32.0	8.36	30.3	7.82	28.3	7.30	27.3	7.05	26.5	6.81	24.6	6.31
	19.0	14.2	32.0	8.15	30.3	7.60	28.3	7.07	27.3	6.84	26.5	6.56	24.6	6.08
	21.0	15.0	32.0	7.86	30.3	7.32	28.3	6.94	27.3	6.62	26.5	6.33	24.6	5.84
80	-14.7	-15.0	20.0	8.36	20.0	8.59	20.0	8.83	20.0	8.90	20.0	8.98	20.0	9.21
	-12.6	-13.0	21.1	8.59	21.1	8.75	21.1	8.98	21.1	9.06	21.1	9.21	21.1	9.37
	-10.5	-11.0	22.2	8.75	22.2	8.98	22.2	9.14	22.2	9.29	22.2	9.37	22.0	9.52
	-9.5	-10.0	22.8	8.90	22.8	9.06	22.8	9.21	22.8	9.37	22.8	9.45	22.0	9.60
	-8.5	-9.1	23.3	8.98	23.3	9.14	23.3	9.29	23.3	9.45	23.3	9.52	22.0	9.45
	-7.0	-7.6	24.2	9.06	24.2	9.21	24.1	9.45	24.1	9.52	23.6	9.60	22.0	8.98
	-5.0	-5.6	25.2	9.21	25.2	9.37	25.2	9.52	24.3	9.60	23.6	9.21	22.0	8.52
	-3.0	-3.7	26.2	9.37	26.2	9.52	25.2	9.45	24.3	9.06	23.6	8.75	22.0	8.05
	0.0	-0.7	27.8	9.52	26.8	9.37	25.2	8.75	24.3	8.44	23.6	8.05	22.0	7.48
	3.0	2.2	28.3	9.29	26.8	8.75	25.2	8.13	24.3	7.82	23.6	7.56	22.0	7.00
	5.0	4.1	28.3	8.90	26.8	8.36	25.2	7.82	24.3	7.51	23.6	7.24	22.0	6.71
	7.0	6.0	28.3	8.52	26.8	7.97	25.2	7.47	24.3	7.22	23.6	6.96	22.0	6.46
	9.0	7.9	28.3	8.21	26.8	7.69	25.2	7.18	24.3	6.94	23.6	6.70	22.0	6.22
	11.0	9.8	28.3	7.90	26.8	7.40	25.2	6.92	24.3	6.69	23.6	6.46	22.0	5.99
	13.0	11.8	28.3	7.59	26.8	7.12	25.2	6.67	24.3	6.44	23.6	6.22	22.0	5.78
	15.0	13.7	28.3	7.33	26.8	6.81	25.2	6.44	24.3	6.22	23.6	6.02	22.0	5.60
	19.0	14.2	28.3	7.08	26.8	6.69	25.2	6.19	24.3	5.99	23.6	5.76	22.0	5.46
	21.0	15.0	28.3	6.88	26.8	6.40	25.2	6.02	24.3	5.80	23.6	5.56	22.0	5.17

capacity factor(%)	outdoor temp.		indoor temp.℃WB											
			16.0		18.0		20.0		21.0		22.0		24.0	
			TC	PI	TC	PI	TC	PI	TC	PI	TC	PI	TC	PI
	℃DB	℃WB	KW	KW	KW	KW	KW	KW	KW	KW	KW	KW	KW	KW
70	-14.7	-15.0	20.0	8.83	20.0	9.06	20.0	9.21	20.0	9.29	20.0	9.37	19.2	9.60
	-12.6	-13.0	21.1	9.06	21.1	9.21	21.1	9.37	21.1	9.45	20.6	9.60	19.2	9.21
	-10.5	-11.0	22.2	9.21	22.2	9.37	22.1	9.52	21.3	9.60	20.6	9.29	19.2	8.59
	-9.5	-10.0	22.8	9.29	22.8	9.45	22.1	9.60	21.3	9.37	20.6	8.98	19.2	8.28
	-8.5	-9.1	23.3	9.37	23.3	9.52	22.1	9.45	21.3	9.14	20.6	8.75	19.2	8.13
	-7.0	-7.6	24.1	9.45	23.5	9.60	22.1	9.06	21.3	8.67	20.6	8.36	19.2	7.74
	-5.0	-5.6	24.9	9.60	23.5	9.14	22.1	8.52	21.3	8.21	20.6	7.90	19.2	7.33
	-3.0	-3.7	24.9	9.29	23.5	8.67	22.1	8.13	21.3	7.82	20.6	7.53	19.2	6.98
	0.0	-0.7	24.9	8.59	23.5	8.05	22.1	7.52	21.3	7.25	20.6	6.99	19.2	6.49
	3.0	2.2	24.9	8.05	23.5	7.52	22.1	7.02	21.3	6.78	20.6	6.55	19.2	6.08
	5.0	4.1	24.9	7.68	23.5	7.21	22.1	6.74	21.3	6.51	20.6	6.29	19.2	5.85
	7.0	6.0	24.9	7.37	23.5	6.92	22.1	6.48	21.3	6.26	20.6	6.05	19.2	5.63
	9.0	7.9	24.9	7.09	23.5	6.66	22.1	6.24	21.3	6.03	20.6	5.83	19.2	5.43
	11.0	9.8	24.9	6.83	23.5	6.42	22.1	6.02	21.3	5.82	20.6	5.58	19.2	5.24
	13.0	11.8	24.9	6.58	23.5	6.19	22.1	5.81	21.3	5.62	20.6	5.43	19.2	5.06
	15.0	13.7	24.9	6.36	23.5	5.98	22.1	5.62	21.3	5.43	20.6	5.26	19.2	4.91
	19.0	14.2	24.9	6.03	23.5	5.82	22.1	5.47	21.3	5.18	20.6	4.96	19.2	4.70
	21.0	15.0	24.9	5.82	23.5	5.53	22.1	5.22	21.3	4.94	20.6	4.71	19.2	4.45
60	-14.7	-15.0	20.0	9.29	20.0	9.45	18.9	9.60	18.3	9.29	17.7	8.98	16.5	8.28
	-12.6	-13.0	21.1	9.45	20.1	9.60	18.9	8.98	18.3	8.67	17.7	8.36	16.5	7.73
	-10.5	-11.0	21.3	9.60	20.1	9.06	18.9	8.44	18.3	8.13	17.7	7.82	16.5	7.25
	-9.5	-10.0	21.3	9.37	20.1	8.75	18.9	8.21	18.3	7.90	17.7	7.59	16.5	7.03
	-8.5	-9.1	21.3	9.14	20.1	8.52	18.9	7.97	18.3	7.67	17.7	7.39	16.5	6.85
	-7.0	-7.6	21.3	8.67	20.1	8.13	18.9	7.61	18.3	7.34	17.7	7.08	16.5	6.57
	-5.0	-5.6	21.3	8.21	20.1	7.70	18.9	7.20	18.3	6.95	17.7	6.70	16.5	6.22
	-3.0	-3.7	21.3	7.82	20.1	7.32	18.9	6.85	18.3	6.62	17.7	6.39	16.5	5.94
	0.0	-0.7	21.3	7.25	20.1	6.81	18.9	6.37	18.3	6.16	17.7	5.95	16.5	5.54
	3.0	2.2	21.3	6.78	20.1	6.37	18.9	5.98	18.3	5.78	17.7	5.59	16.5	5.21
	5.0	4.1	21.3	6.51	20.1	6.12	18.9	5.74	18.3	5.56	17.7	5.37	16.5	5.01
	7.0	6.0	21.3	6.26	20.1	5.89	18.9	5.54	18.3	5.36	17.7	5.18	16.5	4.83
	9.0	7.9	21.3	6.03	20.1	5.68	18.9	5.33	18.3	5.17	17.7	5.00	16.5	4.67
	11.0	9.8	21.3	5.82	20.1	5.48	18.9	5.16	18.3	4.99	17.7	4.83	16.5	4.52
	13.0	11.8	21.3	5.61	20.1	5.30	18.9	4.98	18.3	4.82	17.7	4.68	16.5	4.37
	15.0	13.7	21.3	5.43	20.1	5.13	18.9	4.82	18.3	4.68	17.7	4.53	16.5	4.24
	19.0	14.2	21.3	5.28	20.1	4.88	18.9	4.68	18.3	4.53	17.7	4.36	16.5	4.06
	21.0	15.0	21.3	5.06	20.1	4.74	18.9	4.48	18.3	4.38	17.7	4.22	16.5	3.90
50	-14.7	-15.0	17.8	8.98	16.8	8.44	15.8	7.90	15.2	7.60	14.7	7.32	13.7	6.79
	-12.6	-13.0	17.8	8.44	16.8	7.90	15.8	7.35	15.2	7.11	14.7	6.85	13.7	6.36
	-10.5	-11.0	17.8	7.90	16.8	7.39	15.8	6.91	15.2	6.67	14.7	6.44	13.7	5.98
	-9.5	-10.0	17.8	7.63	16.8	7.16	15.8	6.70	15.2	6.48	14.7	6.26	13.7	5.81
	-8.5	-9.1	17.8	7.43	16.8	6.98	15.8	6.53	15.2	6.31	14.7	6.09	13.7	5.67
	-7.0	-7.6	17.8	7.12	16.8	6.69	15.8	6.26	15.2	6.05	14.7	5.85	13.7	5.45
	-5.0	-5.6	17.8	6.74	16.8	6.34	15.8	5.95	15.2	5.75	14.7	5.56	13.7	5.18
	-3.0	-3.7	17.8	6.43	16.8	6.05	15.8	5.67	15.2	5.49	14.7	5.31	13.7	4.95
	0.0	-0.7	17.8	5.98	16.8	5.64	15.8	5.30	15.2	5.13	14.7	4.96	13.7	4.64
	3.0	2.2	17.8	5.61	16.8	5.30	15.8	4.99	15.2	4.83	14.7	4.68	13.7	4.37
	5.0	4.1	17.8	5.40	16.8	5.10	15.8	4.80	15.2	4.65	14.7	4.42	13.7	4.22
	7.0	6.0	17.8	5.20	16.8	4.92	15.8	4.63	15.2	4.49	14.7	4.35	13.7	4.08
	9.0	7.9	17.8	5.02	16.8	4.75	15.8	4.47	15.2	4.34	14.7	4.21	13.7	3.95
	11.0	9.8	17.8	4.85	16.8	4.59	15.8	4.34	15.2	4.20	14.7	4.08	13.7	3.82
	13.0	11.8	17.8	4.70	16.8	4.44	15.8	4.20	15.2	4.07	14.7	3.95	13.7	3.71
	15.0	13.7	17.8	4.55	16.8	4.31	15.8	4.07	15.2	3.96	14.7	3.83	13.7	3.61
	19.0	14.2	17.8	4.41	16.8	4.14	15.8	3.93	15.2	3.78	14.7	3.70	13.7	3.45
	21.0	15.0	17.8	4.12	16.8	4.03	15.8	3.83	15.2	3.62	14.7	3.56	13.7	3.31

3) 12HP capacity

heating

capacity factor(%)	outdoor temp.		indoor temp.℃WB											
			16.0		18.0		20.0		21.0		22.0		24.0	
			TC	PI	TC	PI	TC	PI	TC	PI	TC	PI	TC	PI
	℃DB	℃WB	KW	KW	KW	KW	KW	KW	KW	KW	KW	KW	KW	KW
130	-14.7	-15.0	23.6	7.32	23.6	7.70	23.6	8.10	23.6	8.28	23.6	8.48	23.6	8.88
	-12.6	-13.0	24.8	7.65	24.8	8.05	24.8	8.40	24.8	8.58	24.8	8.77	24.8	9.15
	-10.5	-11.0	26	8.00	26	8.33	26	8.68	26	8.85	26	9.02	26	9.35
	-9.5	-10.0	27.1	8.15	27.1	8.45	27.1	8.80	27.1	9.00	27.1	9.15	27.1	9.48
	-8.5	-9.1	28.2	8.25	28.2	8.58	28.2	8.90	28.2	9.10	28.2	9.25	28.2	9.58
	-7.0	-7.6	29.5	8.45	29.5	8.77	29.5	9.10	29.5	9.25	29.5	9.41	29.5	9.72
	-5.0	-5.6	30.8	8.68	30.8	9.00	30.8	9.30	30.8	9.45	30.8	9.60	30.8	9.90
	-3.0	-3.7	32	8.90	32	9.20	32	9.48	32	9.64	32	9.77	32	10.10
	0.0	-0.7	33.5	9.20	33.5	9.48	33.5	9.75	33.5	9.88	33.5	10.00	33.5	10.30
	3.0	2.2	34.8	9.45	34.8	9.70	34.8	9.95	34.8	10.10	34.8	10.20	34.8	10.50
	5.0	4.1	36.2	9.60	36.2	9.85	36.2	10.10	36.2	10.20	36.2	10.40	36.2	10.60
	7.0	6.0	37.5	9.75	37.5	9.99	37.5	10.20	37.5	10.30	37.5	10.50	37.5	10.70
	9.0	7.9	38.9	9.85	38.9	10.10	38.9	10.30	38.9	10.50	38.9	10.60	38.9	10.80
	11.0	9.8	40.5	10.00	40.5	10.20	40.5	10.50	40.5	10.60	40.5	10.70	40.5	10.90
	13.0	11.8	41.1	10.10	41.1	10.30	41.1	10.60	41.1	10.70	41.1	10.80	41.1	11.00
	15.0	13.7	42.3	10.20	42.3	10.40	42.3	10.70	42.3	10.80	42.3	10.90	42.3	11.10
	19.0	14.2	42.3	10.40	42.3	10.60	42.3	10.80	42.3	10.90	42.3	11.00	42.3	10.80
	21.0	15.0	42.3	10.60	42.3	10.80	42.3	10.90	42.3	11.00	42.3	11.10	42.3	10.30
120	-14.7	-15.0	23.6	7.85	23.6	8.20	23.6	8.56	23.6	8.73	23.6	8.90	23.6	9.28
	-12.6	-13.0	24.8	8.16	24.8	8.50	24.8	8.85	24.8	9.00	24.8	9.15	24.8	9.50
	-10.5	-11.0	26	8.45	26	8.75	26	9.10	26	9.25	26	9.40	26	9.75
	-9.5	-10.0	27.1	8.60	27.1	8.90	27.1	9.20	27.1	9.35	27.1	9.50	27.1	9.85
	-8.5	-9.1	28.2	8.70	28.2	9.00	28.2	9.30	28.2	9.45	28.2	9.60	28.2	9.90
	-7.0	-7.6	29.5	8.88	29.5	9.17	29.5	9.45	29.5	9.60	29.5	9.75	29.5	10.10
	-5.0	-5.6	30.8	9.10	30.8	9.38	30.8	9.65	30.8	9.80	30.8	9.95	30.8	10.20
	-3.0	-3.7	32	9.30	32	9.55	32	9.85	32	10.00	32	10.10	32	10.40
	0.0	-0.7	33.5	9.57	33.5	9.82	33.5	10.10	33.5	10.20	33.5	10.30	33.5	10.00
	3.0	2.2	34.8	9.80	34.8	10.00	34.8	10.30	34.8	10.40	34.8	10.50	34.8	10.80
	5.0	4.1	36.2	9.95	36.2	10.20	36.2	10.40	36.2	10.50	36.2	10.60	36.2	10.90
	7.0	6.0	37.5	10.10	37.5	10.30	37.5	10.50	37.5	10.60	37.5	10.70	37.5	11.00
	9.0	7.9	38.9	10.20	38.9	10.40	38.9	10.60	38.9	10.70	38.9	10.80	39.2	11.10
	11.0	9.8	40.5	10.30	40.5	10.50	40.5	10.70	40.5	10.80	40.5	10.90	39.2	10.90
	13.0	11.8	41.1	10.40	41.1	10.60	41.1	10.80	41.1	10.90	41.1	11.00	39.2	10.50
	15.0	13.7	42.3	10.50	42.3	10.70	42.3	10.90	42.3	11.00	42.1	11.00	39.2	10.10
	19.0	14.2	42.3	10.80	42.3	11.00	42.3	11.10	42.3	10.90	42.1	10.70	39.2	10.00
	21.0	15.0	42.3	11.00	42.3	10.80	42.3	10.70	42.3	10.60	42.1	10.30	39.2	9.85
110	-14.7	-15.0	23.6	8.35	23.6	8.70	23.6	9.00	23.6	9.18	23.6	9.35	23.6	9.65
	-12.6	-13.0	24.8	8.65	24.8	8.98	24.8	9.25	24.8	9.45	24.8	9.60	24.8	9.90
	-10.5	-11.0	26	8.92	26	9.20	26	9.50	26	9.65	26	9.80	26	10.10
	-9.5	-10.0	27.1	9.05	27.1	9.35	27.1	9.60	27.1	9.75	27.1	9.90	27.1	10.20
	-8.5	-9.1	28.2	9.15	28.2	9.45	28.2	9.70	28.2	9.85	28.2	10.00	28.2	10.30
	-7.0	-7.6	29.5	9.30	29.5	9.58	29.5	9.85	29.5	9.98	29.5	10.10	29.5	10.40
	-5.0	-5.6	30.8	9.50	30.8	9.77	30.8	10.00	30.8	10.20	30.8	10.30	30.8	10.50
	-3.0	-3.7	32	9.70	32	9.95	32	10.20	32	10.30	32	10.50	32	10.70
	0.0	-0.7	33.5	9.95	33.5	10.20	33.5	10.40	33.5	10.50	33.5	10.60	33.5	10.90
	3.0	2.2	34.8	10.20	34.8	10.40	34.8	10.60	34.8	10.70	34.8	10.80	34.8	11.00
	5.0	4.1	36.2	10.30	36.2	10.50	36.2	10.70	36.2	10.80	36.2	10.90	36	11.00
	7.0	6.0	37.5	10.40	37.5	10.60	37.5	10.80	37.5	10.90	37.5	11.00	36	10.50
	9.0	7.9	38.9	10.50	38.9	10.70	38.9	10.90	38.9	11.00	38.6	10.80	36	10.20
	11.0	9.8	40.5	10.60	40.5	10.80	40.5	11.00	39.9	11.10	38.6	10.70	36	9.85

capacity factor(%)	outdoor temp.		indoor temp.℃WB											
			16.0		18.0		20.0		21.0		22.0		24.0	
			TC	PI	TC	PI	TC	PI	TC	PI	TC	PI	TC	PI
	℃DB	℃WB	KW	KW	KW	KW	KW	KW	KW	KW	KW	KW	KW	KW
110	13.0	11.8	41.1	10.70	41.1	10.90	41.1	11.10	39.9	10.70	38.6	10.30	36	9.50
	15.0	13.7	42.3	10.80	42.3	11.00	41.3	10.70	39.9	10.30	38.6	9.95	36	9.15
	19.0	14.2	42.3	11.00	42.3	10.80	41.3	10.30	39.9	9.85	38.6	9.45	36	8.98
	21.0	15.0	42.3	10.80	42.3	10.50	41.3	10.00	39.9	9.50	38.6	9.23	36	8.80
100	-14.7	-15.0	23.6	8.88	23.6	9.18	23.6	9.46	23.6	9.65	23.6	9.75	23.6	10.00
	-12.6	-13.0	24.8	9.15	24.8	9.45	24.8	9.70	24.8	9.85	24.8	10.00	24.8	10.30
	-10.5	-11.0	26	9.38	26	9.65	26	9.90	26	10.10	26	10.20	26	10.40
	-9.5	-10.0	27.1	9.50	27.1	9.75	27.1	10.00	27.1	10.10	27.1	10.30	27.1	10.50
	-8.5	-9.1	28.2	9.59	28.2	9.85	28.2	10.10	28.2	10.20	28.2	10.40	28.2	10.60
	-7.0	-7.6	29.5	9.75	29.5	10.00	29.5	10.20	29.5	10.40	29.5	10.50	29.5	10.70
	-5.0	-5.6	30.8	9.90	30.8	10.20	30.8	10.40	30.8	10.50	30.8	10.60	30.8	10.90
	-3.0	-3.7	32	10.10	32	10.30	32	10.50	32	10.60	32	10.80	32	11.00
	0.0	-0.7	33.5	10.30	33.5	10.50	33.5	10.70	33.5	10.80	33.5	10.90	32.6	10.90
	3.0	2.2	34.8	10.50	34.8	10.70	34.8	10.90	34.8	11.00	34.8	11.10	32.6	10.30
	5.0	4.1	36.2	10.60	36.2	10.80	36.2	11.00	36.2	11.10	35.1	10.70	32.6	9.85
	7.0	6.0	37.5	10.70	37.5	10.90	37.5	11.10	36.2	10.70	35.1	10.30	32.6	9.50
	9.0	7.9	38.9	10.80	38.7	11.00	37.5	10.70	36.2	10.30	35.1	9.90	32.6	9.15
	11.0	9.8	40.5	10.90	39.8	11.10	37.5	10.30	36.2	9.95	35.1	9.55	32.6	9.85
	13.0	11.8	41.1	11.00	39.8	10.60	37.5	9.95	36.2	9.56	35.1	9.25	32.6	8.55
	15.0	13.7	42.3	11.00	39.8	10.30	37.5	9.60	36.2	9.25	35.1	8.95	32.6	8.25
	19.0	14.2	42.3	10.60	39.8	10.00	37.5	9.35	36.2	8.85	35.1	8.45	32.6	7.80
	21.0	15.0	42.3	10.38	39.8	9.65	37.5	9.00	36.2	8.50	35.1	8.00	32.6	7.48
90	-14.7	-15.0	23.6	9.40	23.6	9.66	23.6	9.95	23.6	10.10	23.6	10.20	23.6	10.40
	-12.6	-13.0	24.8	9.65	24.8	9.90	24.8	10.10	24.8	10.30	24.8	10.30	24.8	10.60
	-10.5	-11.0	26	9.85	26	10.10	26	10.30	26	10.50	26	10.50	26	10.70
	-9.5	-10.0	27.1	9.96	27.1	10.20	27.1	10.50	27.1	10.60	27.1	10.60	27.1	10.90
	-8.5	-9.1	28.2	10.00	28.2	10.30	28.2	10.60	28.2	10.70	28.2	10.70	28.2	11.00
	-7.0	-7.6	29.5	10.20	29.5	10.40	29.5	10.70	29.5	10.80	29.5	10.90	29.5	11.10
	-5.0	-5.6	30.8	10.30	30.8	10.50	30.8	10.80	30.8	10.90	30.8	11.00	29.4	10.80
	-3.0	-3.7	32	10.50	32	10.70	32	10.90	32	11.00	32	11.10	29.4	10.50
	0.0	-0.7	33.5	10.70	33.5	10.90	33.5	11.10	32.6	10.80	31.5	10.60	29.4	9.50
	3.0	2.2	34.8	10.90	35.8	11.00	33.7	10.60	32.6	10.30	31.5	9.85	29.4	9.11
	5.0	4.1	36.2	11.00	35.8	11.00	33.7	10.20	32.6	9.85	31.5	9.50	29.4	8.78
	7.0	6.0	37.5	11.10	35.8	10.60	33.7	9.85	32.6	9.50	31.5	9.15	29.4	8.45
	9.0	7.9	38.0	10.90	35.8	10.20	33.7	9.50	32.6	9.15	31.5	8.81	29.4	8.15
	11.0	9.8	38.0	10.50	35.8	9.80	33.7	9.15	32.6	8.85	31.5	8.51	29.4	7.90
	13.0	11.8	38.0	10.10	35.8	9.46	33.7	8.85	32.6	8.55	31.5	8.25	29.4	7.65
	15.0	13.7	38.0	9.76	35.8	9.15	33.7	8.55	32.6	8.25	31.5	8.00	29.4	7.40
	19.0	14.2	38.0	9.45	35.8	8.88	33.7	8.30	32.6	7.93	31.5	7.63	29.4	7.02
	21.0	15.0	38.0	9.00	35.8	8.35	33.7	8.03	32.6	7.60	31.5	7.20	29.4	6.78
80	-14.7	-15.0	23.6	9.90	23.6	10.20	23.6	10.40	23.6	10.50	23.6	10.60	23.6	10.80
	-12.6	-13.0	24.8	10.10	24.8	10.40	24.8	10.60	24.8	10.70	24.8	10.80	24.8	11.00
	-10.5	-11.0	26	10.30	26	10.50	26	10.70	26	10.80	26	11.00	26.1	11.00
	-9.5	-10.0	27.1	10.40	27.1	10.60	27.1	10.80	27.1	10.90	27.1	11.00	26.1	10.70
	-8.5	-9.1	28.2	10.50	28.2	10.70	28.2	10.90	28.2	11.00	28.2	11.10	26.1	10.30
	-7.0	-7.6	29.5	10.60	29.5	10.80	29.5	11.00	29.5	11.10	28	10.80	26.1	10.00
	-5.0	-5.6	30.8	10.80	30.8	10.90	30.8	11.10	29	10.70	28	10.30	26.1	9.52
	-3.0	-3.7	32	10.90	32	11.10	30	10.60	29	10.20	28	9.85	26.1	9.11
	0.0	-0.7	33.5	11.10	31.8	10.50	30	9.92	29	9.56	28	9.20	26.1	8.53
	3.0	2.2	33.8	10.70	31.8	10.00	30	9.35	29	9.00	28	8.65	26.1	8.05
	5.0	4.1	33.8	10.30	31.8	9.60	30	8.95	29	8.65	28	8.35	26.1	7.75
	7.0	6.0	33.8	9.88	31.8	9.25	30.00	8.65	29	8.35	28	8.05	26.1	7.45
	9.0	7.9	33.8	9.50	31.8	8.91	30	8.35	29	8.05	28	7.77	26.1	7.20
	11.0	9.8	33.8	9.20	31.8	8.60	30	8.05	29	7.78	28	7.50	26.1	7.00
	13.0	11.8	33.8	8.88	31.8	8.33	30	7.80	29	7.51	28	7.25	26.1	6.75
	15.0	13.7	33.8	8.60	31.8	8.05	30	7.55	29	7.30	28	7.05	26.1	6.55
	19.0	14.2	33.8	8.30	31.8	7.81	30	7.33	29	6.97	28	6.75	26.1	6.23
	21.0	15.0	33.8	8.00	31.8	7.56	30	7.01	29	6.66	28	6.42	26.1	5.98

heating

capacity factor(%)	outdoor temp.		indoor temp.℃WB											
			16.0		18.0		20.0		21.0		22.0		24.0	
			TC	PI	TC	PI	TC	PI	TC	PI	TC	PI	TC	PI
	℃DB	℃WB	KW	KW	KW	KW	KW	KW	KW	KW	KW	KW	KW	KW
70	-14.7	-15.0	23.6	10.40	23.6	10.60	23.6	10.90	23.6	11.00	23.6	11.10	22.9	10.70
	-12.6	-13.0	24.8	10.60	24.8	10.80	24.8	11.00	24.8	11.10	24.5	10.80	22.9	10.10
	-10.5	-11.0	26	10.70	26	11.00	26.2	11.00	25.3	10.50	24.5	10.30	22.9	9.55
	-9.5	-10.0	27.1	10.80	27.1	11.00	26.2	10.70	25.3	10.30	24.5	10.00	22.9	9.20
	-8.5	-9.1	28.2	10.90	28.2	11.10	26.2	10.40	25.3	10.00	24.5	9.71	22.9	9.00
	-7.0	-7.6	29.5	11.00	27.9	10.70	26.2	10.10	25.3	9.70	24.5	9.35	22.9	8.65
	-5.0	-5.6	29.6	11.00	27.9	10.30	26.2	9.55	25.3	9.25	24.5	8.91	22.9	8.25
	-3.0	-3.7	29.6	10.50	27.9	9.80	26.2	9.15	25.3	8.85	24.5	8.50	22.9	7.88
	0.0	-0.7	29.6	9.78	27.9	9.15	26.2	8.55	25.3	8.25	24.5	7.99	22.9	7.39
	3.0	2.2	29.6	9.20	27.9	8.65	26.2	8.05	25.3	7.78	24.5	7.50	22.9	7.00
	5.0	4.1	29.6	8.85	27.9	8.30	26.2	7.75	25.3	7.50	24.5	7.25	22.9	6.74
	7.0	6.0	29.6	8.53	27.9	8.00	26.2	7.50	25.3	7.25	24.5	7.00	22.9	6.50
	9.0	7.9	29.6	8.25	27.9	7.75	26.2	7.25	25.3	7.00	24.5	6.75	22.9	6.30
	11.0	9.8	29.6	7.95	27.9	7.46	26.2	7.00	25.3	6.76	24.5	6.55	22.9	6.10
	13.0	11.8	29.6	7.68	27.9	7.23	26.2	6.77	25.3	6.55	24.5	6.35	22.9	5.90
	15.0	13.7	29.6	7.45	27.9	7.00	26.2	6.59	25.3	6.35	24.5	6.15	22.9	5.75
	19.0	14.2	29.6	7.22	27.9	6.70	26.2	6.34	25.3	6.26	24.5	5.87	22.9	5.56
	21.0	15.0	29.6	6.88	27.9	6.30	26.2	6.01	25.3	5.78	24.5	5.60	22.9	5.23
60	-14.7	-15.0	23.6	11.00	23.6	11.10	22.4	10.50	21.8	10.00	21	9.68	19.5	8.95
	-12.6	-13.0	24.8	11.10	23.9	10.50	22.4	9.80	21.8	9.45	21	9.12	19.5	8.45
	-10.5	-11.0	25.3	10.50	23.9	10.00	22.4	9.30	21.8	8.95	21	8.65	19.5	8.00
	-9.5	-10.0	25.3	10.30	23.9	9.66	22.4	9.00	21.8	8.70	21	8.40	19.5	7.78
	-8.5	-9.1	25.3	10.00	23.9	9.45	22.4	8.83	21.8	8.50	21	8.20	19.5	7.60
	-7.0	-7.6	25.3	9.70	23.9	9.10	22.4	8.50	21.8	8.20	21	7.98	19.5	7.35
	-5.0	-5.6	25.3	9.25	23.9	8.65	22.4	8.10	21.8	7.80	21	7.50	19.5	7.00
	-3.0	-3.7	25.3	8.88	23.9	8.28	22.4	7.75	21.8	7.50	21	7.25	19.5	6.72
	0.0	-0.7	25.3	8.26	23.9	7.75	22.4	7.28	21.8	7.00	21	6.78	19.5	6.30
	3.0	2.2	25.3	7.76	23.9	7.33	22.4	6.88	21.8	6.60	21	6.40	19.5	6.00
	5.0	4.1	25.3	7.50	23.9	7.05	22.4	6.60	21.8	6.40	21	6.20	19.5	5.79
	7.0	6.0	25.3	7.25	23.9	6.82	22.4	6.40	21.8	6.20	21	6.00	19.5	5.60
	9.0	7.9	25.3	7.00	23.9	6.60	22.4	6.20	21.8	6.00	21	5.80	19.5	5.41
	11.0	9.8	25.3	6.76	23.9	6.36	22.4	6.00	21.8	5.80	21	5.65	19.5	5.25
	13.0	11.8	25.3	6.55	23.9	6.16	22.4	5.80	21.8	5.65	21	5.45	19.5	5.10
	15.0	13.7	25.3	6.35	23.9	6.00	22.4	5.65	21.8	5.46	21	5.30	19.5	4.95
	19.0	14.2	25.3	6.10	23.9	5.78	22.4	5.36	21.8	5.16	21	5.03	19.5	4.76
	21.0	15.0	25.3	5.80	23.9	5.53	22.4	5.15	21.8	4.99	21	4.86	19.5	4.49
50	-14.7	-15.0	21.1	9.72	19.9	9.10	18.7	8.50	18.1	8.21	17.5	7.95	16.3	7.35
	-12.6	-13.0	21.1	9.15	19.9	8.60	18.7	8.05	18.1	7.77	17.5	7.50	16.3	7.00
	-10.5	-11.0	21.1	8.66	19.9	8.15	18.7	7.63	18.1	7.36	17.5	7.10	16.3	6.60
	-9.5	-10.0	21.1	8.45	19.9	7.90	18.7	7.45	18.1	7.18	17.5	6.95	16.3	6.45
	-8.5	-9.1	21.1	8.25	19.9	7.75	18.7	7.25	18.1	7.00	17.5	6.78	16.3	6.30
	-7.0	-7.6	21.1	7.95	19.9	7.45	18.7	7.00	18.1	6.77	17.5	6.55	16.3	6.10
	-5.0	-5.6	21.1	7.58	19.9	7.15	18.7	6.68	18.1	6.45	17.5	6.25	16.3	5.85
	-3.0	-3.7	21.1	7.25	19.9	6.85	18.7	6.42	18.1	6.21	17.5	6.00	16.3	5.60
	0.0	-0.7	21.1	6.80	19.9	6.45	18.7	6.05	18.1	5.85	17.5	5.66	16.3	5.30
	3.0	2.2	21.1	6.45	19.9	6.08	18.7	5.71	18.1	5.55	17.5	5.36	16.3	5.00
	5.0	4.1	21.1	6.21	19.9	5.88	18.7	5.55	18.1	5.35	17.5	5.20	16.3	4.90
	7.0	6.0	21.1	6.00	19.9	5.68	18.7	5.35	18.1	5.20	17.5	5.05	16.3	4.70
	9.0	7.9	21.1	5.82	19.9	5.50	18.7	5.20	18.1	5.05	17.5	4.88	16.3	4.60
	11.0	9.8	21.1	5.65	19.9	5.35	18.7	5.05	18.1	4.90	17.5	4.75	16.3	4.45
	13.0	11.8	21.1	5.46	19.9	5.16	18.7	4.88	18.1	4.75	17.5	4.60	16.3	4.30
	15.0	13.7	21.1	5.32	19.9	5.05	18.7	4.75	18.1	4.65	17.5	4.47	16.3	4.20
	19.0	14.2	21.1	5.14	19.9	4.87	18.7	4.51	18.1	4.40	17.5	4.26	16.3	4.08
	21.0	15.0	21.1	4.98	19.9	4.50	18.7	4.31	18.1	4.24	17.5	4.10	16.3	3.91

4) 14HP capacity

capacity factor(%)	outdoor temp.		indoor temp.℃WB											
			16.0		18.0		20.0		21.0		22.0		24.0	
			TC	PI	TC	PI	TC	PI	TC	PI	TC	PI	TC	PI
	℃DB	℃WB	KW	KW	KW	KW	KW	KW	KW	KW	KW	KW	KW	KW
130	-14.7	-15.0	26.8	8.70	26.8	9.22	26.8	9.73	26.8	9.99	26.8	10.25	26.8	10.77
	-12.6	-13.0	28.4	9.25	28.4	9.73	28.4	10.22	28.4	10.45	28.4	10.70	28.4	11.18
	-10.5	-11.0	30.2	9.72	30.2	10.18	30.2	10.64	30.2	10.86	30.2	11.10	30.2	11.52
	-9.5	-10.0	31.2	9.95	31.2	10.39	31.2	10.83	31.2	11.05	31.2	11.28	31.2	11.74
	-8.5	-9.1	31.9	10.13	31.9	10.57	31.9	11.00	31.9	11.21	31.9	11.40	31.9	11.85
	-7.0	-7.6	33.2	10.42	33.2	10.84	33.2	11.26	33.2	11.52	33.2	11.63	33.2	12.08
	-5.0	-5.6	35	10.77	35	11.17	35	11.52	35	11.74	35	11.97	35	12.31
	-3.0	-3.7	36.6	11.09	36.6	11.40	36.6	11.85	36.6	12.08	36.6	12.19	36.6	12.65
	0.0	-0.7	39.2	11.52	39.2	11.85	39.2	12.19	39.2	12.42	39.2	12.53	39.2	12.87
	3.0	2.2	41.7	11.85	41.7	12.19	41.7	12.53	41.7	12.65	41.7	12.87	41.7	13.21
	5.0	4.1	43.3	12.08	43.3	12.42	43.3	12.76	43.3	12.87	43.3	13.10	43.3	13.32
	7.0	6.0	45	12.31	45	12.65	45	12.87	45	13.10	45	13.21	45	13.55
	9.0	7.9	46.6	12.42	46.6	12.76	46.6	13.10	46.6	13.21	46.6	13.32	46.6	13.66
	11.0	9.8	48.2	12.65	48.2	12.87	48.2	13.21	48.2	13.32	48.2	13.55	48.2	13.77
	13.0	11.8	49	12.76	49	13.10	49	13.32	49	13.55	49	13.66	49	13.89
	15.0	13.7	51.6	12.98	51.6	13.21	51.6	13.44	51.6	13.66	51.6	13.77	51	13.77
	19.0	14.2	51.6	13.10	51.6	13.35	51.6	13.56	51.6	13.78	51.6	13.90	51	13.50
	21.0	15.0	51.6	13.20	51.6	13.48	51.6	13.69	51.6	13.86	51.6	13.68	51	13.36
120	-14.7	-15.0	26.8	9.40	26.8	9.88	26.8	10.35	26.8	10.59	26.8	10.83	26.8	11.29
	-12.6	-13.0	28.4	9.90	28.4	10.34	28.4	10.79	28.4	11.02	28.4	11.25	28.4	11.74
	-10.5	-11.0	30.2	10.34	30.2	10.76	30.2	11.18	30.2	11.40	30.2	11.63	30.2	12.08
	-9.5	-10.0	31.2	10.55	31.2	10.95	31.2	11.40	31.2	11.52	31.2	11.74	31.2	12.19
	-8.5	-9.1	31.9	10.71	31.9	11.11	31.9	11.52	31.9	11.74	31.9	11.97	31.9	12.31
	-7.0	-7.6	33.2	10.99	33.2	11.40	33.2	11.74	33.2	11.97	33.2	12.1	33.2	12.53
	-5.0	-5.6	35	11.29	35	11.63	35	12.08	35	12.19	35	12.4	35	12.76
	-3.0	-3.7	36.6	11.63	36.6	11.97	36.6	12.31	36.6	12.42	36.6	12.6	36.6	12.98
	0.0	-0.7	39.2	11.97	39.2	12.31	39.2	12.65	39.2	12.76	39.2	12.98	39.2	13.32
	3.0	2.2	41.7	12.31	41.7	12.65	41.7	12.98	41.7	13.10	41.7	13.21	41.7	13.55
	5.0	4.1	43.3	12.53	43.3	12.76	43.3	13.10	43.3	13.21	43.3	13.44	43.3	13.66
	7.0	6.0	45	12.65	45	12.98	45	13.32	45	13.44	45	13.55	45	13.89
	9.0	7.9	46.6	12.87	46.6	13.10	46.6	13.44	46.6	13.55	46.6	13.66	46.6	14.00
	11.0	9.8	48.2	12.98	48.2	13.32	48.2	13.55	48.2	13.66	48.2	13.77	47.1	13.55
	13.0	11.8	49	13.21	49	13.44	49	13.66	49	13.77	49	14.00	47.1	13.10
	15.0	13.7	51.6	13.32	51.6	13.55	51.6	13.77	51.6	13.89	50.5	13.66	47.1	12.53
	19.0	14.2	51.6	13.43	51.6	13.66	51.6	13.79	51.6	13.76	50.5	13.43	47.1	12.23
	21.0	15.0	51.6	13.57	51.6	13.77	51.6	13.87	51.6	13.65	50.5	13.02	47.1	12.01
110	-14.7	-15.0	26.8	10.09	26.8	10.53	26.8	10.95	26.8	11.18	26.8	11.40	26.8	11.85
	-12.6	-13.0	28.4	10.56	28.4	10.96	28.4	11.40	28.4	11.63	28.4	11.74	28.4	12.19
	-10.5	-11.0	30.2	10.95	30.2	11.29	30.2	11.74	30.2	11.97	30.2	12.08	30.2	12.53
	-9.5	-10.0	31.2	11.14	31.2	11.52	31.2	11.85	31.2	12.1	31.2	12.31	31.2	12.65
	-8.5	-9.1	31.9	11.29	31.9	11.63	31.9	12.08	31.9	12.2	31.9	12.42	31.9	12.76
	-7.0	-7.6	33.2	11.52	33.2	11.85	33.2	12.19	33.2	12.4	33.2	12.65	33.2	12.98
	-5.0	-5.6	35	11.85	35	12.19	35	12.53	35	12.6	35	12.87	35	13.21
	-3.0	-3.7	36.6	12.08	36.6	12.42	36.6	12.76	36.6	12.9	36.6	13.10	36.6	13.32
	0.0	-0.7	39.2	12.42	39.2	12.76	39.2	13.10	39.2	13.2	39.2	13.32	39.2	13.66
	3.0	2.2	41.7	12.76	41.7	13.10	41.7	13.32	41.7	13.44	41.7	13.66	41.7	13.89
	5.0	4.1	43.3	12.98	43.3	13.21	43.3	13.44	43.3	13.66	43.3	13.77	43.2	13.89
	7.0	6.0	45	13.10	45	13.32	45	13.66	45	13.77	45	13.89	43.2	13.32
	9.0	7.9	46.6	13.32	46.6	13.55	46.6	13.77	46.6	13.89	46.3	13.89	43.2	12.76
	11.0	9.8	48.2	13.44	48.2	13.66	48.2	13.89	47.9	13.89	46.3	13.32	43.2	12.31

heating

capacity factor(%)	outdoor temp.		indoor temp.℃WB											
			16.0		18.0		20.0		21.0		22.0		24.0	
			TC	PI	TC	PI	TC	PI	TC	PI	TC	PI	TC	PI
	℃DB	℃WB	KW	KW	KW	KW	KW	KW	KW	KW	KW	KW	KW	KW
110	13.0	11.8	49	13.55	49	13.77	49.6	13.77	47.9	13.32	46.3	12.76	43.2	11.85
	15.0	13.7	51.6	13.66	51.6	13.89	49.6	13.32	47.9	12.87	46.3	12.31	43.2	11.40
	19.0	14.2	51.6	12.77	51.6	13.76	49.6	12.89	47.9	12.35	46.3	11.89	43.2	11.03
	21.0	15.0	51.6	12.88	51.6	13.36	49.6	12.20	47.9	11.98	46.3	11.56	43.2	10.87
100	-14.7	-15.0	26.8	10.79	26.8	11.19	26.8	11.63	26.8	11.74	26.8	11.97	26.8	12.42
	-12.6	-13.0	28.4	11.21	28.4	11.63	28.4	11.97	28.4	12.08	28.4	12.31	28.4	12.65
	-10.5	-11.0	30.2	11.63	30.2	11.97	30.2	12.31	30.2	12.42	30.2	12.65	30.2	12.98
	-9.5	-10.0	31.2	11.74	31.2	12.08	31.2	12.42	31.2	12.65	31.2	12.76	31.2	13.10
	-8.5	-9.1	31.9	11.85	31.9	12.19	31.9	12.53	31.9	12.8	31.9	12.87	31.9	13.21
	-7.0	-7.6	33.2	12.08	33.2	12.42	33.2	12.76	33.2	12.9	33.2	13.10	33.2	13.44
	-5.0	-5.6	35	12.42	35	12.65	35	12.98	35	13.1	35	13.32	35	13.55
	-3.0	-3.7	36.6	12.65	36.6	12.87	36.6	13.21	36.6	13.3	36.6	13.44	36.6	13.77
	0.0	-0.7	39.2	12.98	39.2	13.21	39.2	13.44	39.2	13.7	39.2	13.77	39.3	14.00
	3.0	2.2	41.7	13.21	41.7	13.44	41.7	13.77	41.7	13.9	41.7	14.00	39.3	13.10
	5.0	4.1	43.3	13.32	43.3	13.66	43.3	13.89	43.3	14.00	42.1	13.55	39.3	12.53
	7.0	6.0	45	13.55	45	13.77	45	14.00	43.6	13.44	42.1	12.98	39.3	11.97
	9.0	7.9	46.6	13.66	46.6	13.89	45	13.44	43.6	12.98	42.1	12.42	39.3	11.52
	11.0	9.8	48.2	13.77	47.9	13.89	45	12.87	43.6	12.42	42.1	11.97	39.3	11.08
	13.0	11.8	49	13.89	47.9	13.32	45	12.42	43.6	11.97	42.1	11.52	39.3	10.66
	15.0	13.7	50.7	13.66	47.9	12.87	45	11.97	43.6	11.52	42.1	11.11	39.3	10.29
	19.0	14.2	50.7	13.30	47.9	12.43	45	11.67	43.6	11.04	42.1	10.68	39.3	10.01
	21.0	15.0	50.7	12.88	47.9	11.89	45	11.23	43.6	10.87	42.1	10.36	39.3	9.79
90	-14.7	-15.0	26.8	11.52	26.8	11.85	26.8	12.19	26.8	12.42	26.8	12.53	26.8	12.87
	-12.6	-13.0	28.4	11.85	28.4	12.19	28.4	12.53	28.4	12.65	28.4	12.87	28.4	13.21
	-10.5	-11.0	30.2	12.19	30.2	12.53	30.2	12.87	30.2	12.98	30.2	13.10	30.2	13.44
	-9.5	-10.0	31.2	12.31	31.2	12.65	31.2	12.98	31.2	13.10	31.2	13.21	31.2	13.55
	-8.5	-9.1	31.9	12.42	31.9	12.76	31.9	13.10	31.9	13.21	31.9	13.32	31.9	13.66
	-7.0	-7.6	33.2	12.65	33.2	12.98	33.2	13.21	33.2	13.44	33.2	13.55	33.2	13.77
	-5.0	-5.6	35	12.87	35	13.21	35	13.44	35	13.55	35	13.77	35	14.00
	-3.0	-3.7	36.6	13.10	36.6	13.44	36.6	13.66	36.6	13.77	36.6	13.89	35.2	13.44
	0.0	-0.7	39.2	13.44	39.2	13.66	39.2	13.89	39.1	14.00	37.8	13.44	35.2	12.42
	3.0	2.2	41.7	13.66	41.7	13.89	40.6	13.55	39.1	13.10	37.8	12.53	35.2	11.63
	5.0	4.1	43.3	13.77	43.2	13.89	40.6	12.98	39.1	12.53	37.8	11.97	35.2	11.11
	7.0	6.0	45	13.89	43.2	13.32	40.6	12.42	39.1	11.97	37.8	11.52	35.2	10.67
	9.0	7.9	45.8	13.66	43.2	12.76	40.6	11.97	39.1	11.52	37.8	11.09	35.2	10.26
	11.0	9.8	45.8	13.10	43.2	12.31	40.6	11.52	39.1	11.06	37.8	10.67	35.2	9.89
	13.0	11.8	45.8	12.65	43.2	11.85	40.6	11.03	39.1	10.65	37.8	10.27	35.2	9.53
	15.0	13.7	45.8	12.19	43.2	11.40	40.6	10.65	39.1	10.29	37.8	9.92	35.2	9.20
	19.0	14.2	45.8	11.89	43.2	11.08	40.6	10.31	39.1	9.98	37.8	9.57	35.2	8.87
	21.0	15.0	45.8	11.46	43.2	10.67	40.6	10.12	39.1	9.65	37.8	9.23	35.2	8.51
80	-14.7	-15.0	26.8	12.19	26.8	12.53	26.8	12.87	26.8	12.98	26.8	13.10	26.8	13.44
	-12.6	-13.0	28.4	12.53	28.4	12.76	28.4	13.10	28.4	13.21	28.4	13.44	28.4	13.66
	-10.5	-11.0	30.2	12.76	30.2	13.10	30.2	13.32	30.2	13.55	30.2	13.66	30.2	13.89
	-9.5	-10.0	31.2	12.98	31.2	13.21	31.2	13.44	31.2	13.66	31.2	13.77	31.2	14.00
	-8.5	-9.1	31.9	13.10	31.9	13.32	31.9	13.55	31.9	13.77	31.9	13.89	31.3	13.77
	-7.0	-7.6	33.2	13.21	33.2	13.44	33.2	13.77	33.2	13.89	33.2	14.00	31.3	13.10
	-5.0	-5.6	35	13.44	35	13.66	35	13.89	34.8	14.00	33.7	13.44	31.3	12.42
	-3.0	-3.7	36.6	13.66	36.6	13.89	36	13.77	34.8	13.21	33.7	12.76	31.3	11.74
	0.0	-0.7	39.2	13.89	38.3	13.66	36	12.76	34.8	12.31	33.7	11.74	31.3	10.91
	3.0	2.2	40.7	13.55	38.3	12.76	36	11.85	34.8	11.40	33.7	11.02	31.3	10.21
	5.0	4.1	40.7	12.98	38.3	12.19	36	11.40	34.8	10.95	33.7	10.56	31.3	9.79
	7.0	6.0	40.7	12.42	38.3	11.63	36	10.90	34.8	10.52	33.7	10.15	31.3	9.42
	9.0	7.9	40.7	11.97	38.3	11.21	36	10.48	34.8	10.12	33.7	9.77	31.3	9.07
	11.0	9.8	40.7	11.52	38.3	10.79	36	10.09	34.8	9.75	33.7	9.42	31.3	8.74
	13.0	11.8	40.7	11.08	38.3	10.39	36	9.72	34.8	9.39	33.7	9.07	31.3	8.43
	15.0	13.7	40.7	10.69	38.3	9.94	36	9.39	34.8	9.08	33.7	8.77	31.3	8.16
	19.0	14.2	40.7	10.32	38.3	9.76	36	9.02	34.8	8.74	33.7	8.40	31.3	7.96
	21.0	15.0	40.7	10.03	38.3	9.34	36	8.78	34.8	8.46	33.7	8.11	31.3	7.54

capacity factor(%)	outdoor temp.		indoor temp.℃WB											
			16.0		18.0		20.0		21.0		22.0		24.0	
			TC	PI	TC	PI	TC	PI	TC	PI	TC	PI	TC	PI
	℃DB	℃WB	KW	KW	KW	KW	KW	KW	KW	KW	KW	KW	KW	KW
70	-14.7	-15.0	26.8	12.87	26.8	13.21	26.8	13.44	26.8	13.55	26.8	13.66	26.8	14.00
	-12.6	-13.0	28.4	13.21	28.4	13.44	28.4	13.66	28.4	13.77	28.4	14.00	27.4	13.44
	-10.5	-11.0	30.2	13.44	30.2	13.66	30.2	13.89	30.2	14.00	29.5	13.55	27.4	12.53
	-9.5	-10.0	31.2	13.55	31.2	13.77	31.2	14.00	30.5	13.66	29.5	13.10	27.4	12.08
	-8.5	-9.1	31.9	13.66	31.9	13.89	31.6	13.77	30.5	13.32	29.5	12.76	27.4	11.85
	-7.0	-7.6	33.2	13.77	33.2	14.00	31.6	13.21	30.5	12.65	29.5	12.19	27.4	11.29
	-5.0	-5.6	35	14.00	33.5	13.32	31.6	12.42	30.5	11.97	29.5	11.52	27.4	10.69
	-3.0	-3.7	35.6	13.55	33.5	12.65	31.6	11.85	30.5	11.40	29.5	10.99	27.4	10.17
	0.0	-0.7	35.6	12.53	33.5	11.74	31.6	10.96	30.5	10.58	29.5	10.20	27.4	9.46
	3.0	2.2	35.6	11.74	33.5	10.96	31.6	10.24	30.5	9.89	29.5	9.55	27.4	8.86
	5.0	4.1	35.6	11.20	33.5	10.51	31.6	9.83	30.5	9.50	29.5	9.17	27.4	8.52
	7.0	6.0	35.6	10.75	33.5	10.09	31.6	9.45	30.5	9.13	29.5	8.82	27.4	8.21
	9.0	7.9	35.6	10.34	33.5	9.71	31.6	9.10	30.5	8.80	29.5	8.50	27.4	7.91
	11.0	9.8	35.6	9.96	33.5	9.36	31.6	8.78	30.5	8.49	29.5	8.14	27.4	7.64
	13.0	11.8	35.6	9.60	33.5	9.02	31.6	8.47	30.5	8.20	29.5	7.91	27.4	7.38
	15.0	13.7	35.6	9.27	33.5	8.73	31.6	8.20	30.5	7.93	29.5	7.67	27.4	7.16
	19.0	14.2	35.6	8.80	33.5	8.49	31.6	7.97	30.5	7.56	29.5	7.23	27.4	6.86
	21.0	15.0	35.6	8.49	33.5	8.07	31.6	7.61	30.5	7.21	29.5	6.87	27.4	6.49
60	-14.7	-15.0	26.8	13.55	26.8	13.77	26.8	14.00	26.1	13.55	25.3	13.10	23.5	12.08
	-12.6	-13.0	28.4	13.77	28.4	14.00	27	13.10	26.1	12.65	25.3	12.19	23.5	11.27
	-10.5	-11.0	30.2	14.00	28.7	13.21	27	12.31	26.1	11.85	25.3	11.40	23.5	10.57
	-9.5	-10.0	30.5	13.66	28.7	12.76	27	11.97	26.1	11.52	25.3	11.08	23.5	10.25
	-8.5	-9.1	30.5	13.32	28.7	12.42	27	11.63	26.1	11.19	25.3	10.78	23.5	9.99
	-7.0	-7.6	30.5	12.65	28.7	11.85	27	11.10	26.1	10.70	25.3	10.33	23.5	9.57
	-5.0	-5.6	30.5	11.97	28.7	11.23	27	10.50	26.1	10.14	25.3	9.78	23.5	9.08
	-3.0	-3.7	30.5	11.40	28.7	10.68	27	9.99	26.1	9.65	25.3	9.31	23.5	8.66
	0.0	-0.7	30.5	10.57	28.7	9.92	27	9.29	26.1	8.99	25.3	8.68	23.5	8.07
	3.0	2.2	30.5	9.89	28.7	9.29	27	8.72	26.1	8.43	25.3	8.15	23.5	7.60
	5.0	4.1	30.5	9.50	28.7	8.93	27	8.38	26.1	8.11	25.3	7.84	23.5	7.30
	7.0	6.0	30.5	9.12	28.7	8.59	27	8.07	26.1	7.81	25.3	7.55	23.5	7.05
	9.0	7.9	30.5	8.80	28.7	8.29	27	7.78	26.1	7.54	25.3	7.29	23.5	6.81
	11.0	9.8	30.5	8.49	28.7	7.99	27	7.52	26.1	7.28	25.3	7.05	23.5	6.59
	13.0	11.8	30.5	8.19	28.7	7.72	27	7.26	26.1	7.03	25.3	6.82	23.5	6.38
	15.0	13.7	30.5	7.93	28.7	7.47	27	7.03	26.1	6.82	25.3	6.60	23.5	6.19
	19.0	14.2	30.5	7.70	28.7	7.11	27	6.82	26.1	6.61	25.3	6.36	23.5	5.92
	21.0	15.0	30.5	7.38	28.7	6.91	27	6.53	26.1	6.39	25.3	6.15	23.5	5.69
50	-14.7	-15.0	25.3	13.10	23.9	12.31	22.5	11.52	21.7	11.09	21	10.68	19.6	9.90
	-12.6	-13.0	25.3	12.31	23.9	11.52	22.5	10.73	21.7	10.36	21	9.99	19.6	9.27
	-10.5	-11.0	25.3	11.52	23.9	10.77	22.5	10.07	21.7	9.73	21	9.39	19.6	8.73
	-9.5	-10.0	25.3	11.13	23.9	10.44	22.5	9.78	21.7	9.45	21	9.12	19.6	8.48
	-8.5	-9.1	25.3	10.84	23.9	10.17	22.5	9.53	21.7	9.20	21	8.89	19.6	8.26
	-7.0	-7.6	25.3	10.39	23.9	9.75	22.5	9.13	21.7	8.83	21	8.54	19.6	7.95
	-5.0	-5.6	25.3	9.83	23.9	9.25	22.5	8.67	21.7	8.39	21	8.11	19.6	7.55
	-3.0	-3.7	25.3	9.37	23.9	8.82	22.5	8.28	21.7	8.00	21	7.75	19.6	7.23
	0.0	-0.7	25.3	8.73	23.9	8.22	22.5	7.72	21.7	7.49	21	7.24	19.6	6.76
	3.0	2.2	25.3	8.19	23.9	7.72	22.5	7.27	21.7	7.05	21	6.82	19.6	6.38
	5.0	4.1	25.3	7.88	23.9	7.44	22.5	7.00	21.7	6.79	21	6.43	19.6	6.15
	7.0	6.0	25.3	7.59	23.9	7.17	22.5	6.75	21.7	6.55	21	6.35	19.6	5.95
	9.0	7.9	25.3	7.33	23.9	6.92	22.5	6.53	21.7	6.33	21	6.14	19.6	5.76
	11.0	9.8	25.3	7.08	23.9	6.70	22.5	6.32	21.7	6.13	21	5.95	19.6	5.58
	13.0	11.8	25.3	6.85	23.9	6.48	22.5	6.12	21.7	5.94	21	5.76	19.6	5.41
	15.0	13.7	25.3	6.64	23.9	6.29	22.5	5.94	21.7	5.77	21	5.59	19.6	5.26
	19.0	14.2	25.3	6.43	23.9	6.04	22.5	5.73	21.7	5.51	21	5.40	19.6	5.03
	21.0	15.0	25.3	6.01	23.9	5.87	22.5	5.58	21.7	5.28	21	5.19	19.6	4.83

5) 16HP capacity

heating

capacity factor(%)	outdoor temp.		indoor temp.℃WB											
			16.0		18.0		20.0		21.0		22.0		24.0	
			TC	PI	TC	PI	TC	PI	TC	PI	TC	PI	TC	PI
	℃DB	℃WB	KW	KW	KW	KW	KW	KW	KW	KW	KW	KW	KW	KW
130	-14.7	-15.0	29.3	9.33	29.3	9.88	29.3	10.43	29.3	10.71	29.3	10.98	29.3	11.54
	-12.6	-13.0	31.2	9.91	31.2	10.43	31.2	10.95	31.2	11.20	31.2	11.47	31.2	11.98
	-10.5	-11.0	33.2	10.42	33.2	10.91	33.2	11.40	33.2	11.64	33.2	11.89	33.2	12.34
	-9.5	-10.0	34.3	10.66	34.3	11.13	34.3	11.60	34.3	11.84	34.3	12.08	34.3	12.58
	-8.5	-9.1	35.1	10.85	35.1	11.32	35.1	11.78	35.1	12.01	35.1	12.22	35.1	12.70
	-7.0	-7.6	36.5	11.17	36.5	11.61	36.5	12.06	36.5	12.34	36.5	12.46	36.5	12.94
	-5.0	-5.6	38.5	11.54	38.5	11.96	38.5	12.34	38.5	12.58	38.5	12.82	38.5	13.19
	-3.0	-3.7	40.4	11.88	40.4	12.22	40.4	12.70	40.4	12.94	40.4	13.06	40.4	13.55
	0.0	-0.7	43.4	12.34	43.4	12.70	43.4	13.06	43.4	13.31	43.4	13.43	43.4	13.79
	3.0	2.2	46.2	12.70	46.2	13.06	46.2	13.43	46.2	13.55	46.2	13.79	46.2	14.15
	5.0	4.1	48.1	12.94	48.1	13.31	48.1	13.67	48.1	13.79	48.1	14.03	48.1	14.27
	7.0	6.0	50	13.19	50	13.55	50	13.79	50	14.03	50	14.15	50	14.52
	9.0	7.9	51.8	13.31	51.8	13.67	51.8	14.03	51.8	14.15	51.8	14.27	51.8	14.64
	11.0	9.8	53.7	13.55	53.7	13.79	53.7	14.15	53.7	14.27	53.7	14.52	53.7	14.76
	13.0	11.8	55.78	13.67	55.78	14.03	55.78	14.27	55.78	14.52	55.78	14.64	55.78	14.88
	15.0	13.7	57.6	13.91	57.5	14.15	57.5	14.40	57.5	14.64	57.5	14.76	56.6	14.76
	19.0	14.2	57.6	14.04	57.5	14.30	57.5	14.53	57.5	14.76	57.5	14.89	56.6	14.46
	21.0	15.0	57.6	14.14	57.5	14.44	57.5	14.67	57.5	14.85	57.5	14.66	56.6	14.31
120	-14.7	-15.0	29.3	10.08	29.3	10.58	29.3	11.09	29.3	11.35	29.3	11.60	29.3	12.10
	-12.6	-13.0	31.2	10.61	31.2	11.08	31.2	11.56	31.2	11.81	31.2	12.05	31.2	12.58
	-10.5	-11.0	33.2	11.08	33.2	11.53	33.2	11.98	33.2	12.22	33.2	12.46	33.2	12.94
	-9.5	-10.0	34.3	11.30	34.3	11.73	34.3	12.22	34.3	12.34	34.3	12.58	34.3	13.06
	-8.5	-9.1	35.1	11.48	35.1	11.90	35.1	12.34	35.1	12.58	35.1	12.82	35.1	13.19
	-7.0	-7.6	36.5	11.77	36.5	12.22	36.5	12.58	36.5	12.82	36.5	12.9	36.5	13.43
	-5.0	-5.6	38.5	12.10	38.5	12.46	38.5	12.94	38.5	13.06	38.5	13.3	38.5	13.67
	-3.0	-3.7	40.4	12.46	40.4	12.82	40.4	13.19	40.4	13.31	40.4	13.5	40.4	13.91
	0.0	-0.7	43.4	12.82	43.4	13.19	43.4	13.55	43.4	13.67	43.4	13.91	43.4	14.27
	3.0	2.2	46.2	13.19	46.2	13.55	46.2	13.91	46.2	14.03	46.2	14.15	46.2	14.52
	5.0	4.1	48.1	13.43	48.1	13.67	48.1	14.03	48.1	14.15	48.1	14.40	48.1	14.64
	7.0	6.0	50	13.55	50	13.91	50	14.27	50	14.40	50	14.52	50	14.88
	9.0	7.9	51.8	13.79	51.8	14.03	51.8	14.40	51.8	14.52	51.8	14.64	51.8	15.00
	11.0	9.8	53.7	13.91	53.7	14.27	53.7	14.52	53.7	14.64	53.7	14.76	52.3	14.52
	13.0	11.8	55.78	14.15	55.78	14.40	55.78	14.64	55.78	14.76	55.78	15.00	52.3	14.03
	15.0	13.7	57.5	14.27	57.5	14.52	57.5	14.76	57.5	14.88	56.1	14.64	52.3	13.43
	19.0	14.2	57.5	14.39	57.5	14.64	57.5	14.78	57.5	14.74	56.1	14.39	52.3	13.10
	21.0	15.0	57.5	14.54	57.5	14.75	57.5	14.86	57.5	14.63	56.1	13.95	52.3	12.87
110	-14.7	-15.0	29.3	10.81	29.3	11.29	29.3	11.73	29.3	11.98	29.3	12.22	29.3	12.70
	-12.6	-13.0	31.2	11.31	31.2	11.75	31.2	12.22	31.2	12.46	31.2	12.58	31.2	13.06
	-10.5	-11.0	33.2	11.73	33.2	12.10	33.2	12.58	33.2	12.82	33.2	12.94	33.2	13.43
	-9.5	-10.0	34.3	11.94	34.3	12.34	34.3	12.70	34.3	12.9	34.3	13.19	34.3	13.55
	-8.5	-9.1	35.1	12.10	35.1	12.46	35.1	12.94	35.1	13.1	35.1	13.31	35.1	13.67
	-7.0	-7.6	36.5	12.34	36.5	12.70	36.5	13.06	36.5	13.3	36.5	13.55	36.5	13.91
	-5.0	-5.6	38.5	12.70	38.5	13.06	38.5	13.43	38.5	13.5	38.5	13.79	38.5	14.15
	-3.0	-3.7	40.4	12.94	40.4	13.31	40.4	13.67	40.4	13.8	40.4	14.03	40.4	14.27
	0.0	-0.7	43.4	13.31	43.4	13.67	43.4	14.03	43.4	14.2	43.4	14.27	43.4	14.64
	3.0	2.2	46.2	13.67	46.2	14.03	46.2	14.27	46.2	14.40	46.2	14.64	46.2	14.88
	5.0	4.1	48.1	13.91	48.1	14.15	48.1	14.40	48.1	14.64	48.1	14.76	47.9	14.88
	7.0	6.0	50	14.03	50	14.27	50	14.64	50	14.76	50	14.88	47.9	14.27
	9.0	7.9	51.8	14.27	51.8	14.52	51.8	14.76	51.8	14.88	51.4	14.88	47.9	13.67
	11.0	9.8	53.7	14.40	53.7	14.64	53.7	14.88	53.2	14.88	51.4	14.27	47.9	13.19

capacity factor(%)	outdoor temp.		indoor temp.℃WB											
			16.0		18.0		20.0		21.0		22.0		24.0	
			TC	PI	TC	PI	TC	PI	TC	PI	TC	PI	TC	PI
	℃DB	℃WB	KW	KW	KW	KW	KW	KW	KW	KW	KW	KW	KW	KW
110	13.0	11.8	55.78	14.52	55.78	14.76	55	14.76	53.2	14.27	51.4	13.67	47.9	12.70
	15.0	13.7	57.6	14.64	57.6	14.88	55	14.27	53.2	13.79	51.4	13.19	47.9	12.22
	19.0	14.2	57.6	13.68	57.6	14.74	55	13.81	53.2	13.23	51.4	12.74	47.9	11.82
	21.0	15.0	57.6	13.80	57.6	14.31	55	13.07	53.2	12.84	51.4	12.39	47.9	11.65
100	-14.7	-15.0	29.3	11.56	29.3	11.99	29.3	12.46	29.3	12.58	29.3	12.82	29.3	13.31
	-12.6	-13.0	31.2	12.01	31.2	12.46	31.2	12.82	31.2	12.94	31.2	13.19	31.2	13.55
	-10.5	-11.0	33.2	12.46	33.2	12.82	33.2	13.19	33.2	13.31	33.2	13.55	33.2	13.91
	-9.5	-10.0	34.3	12.58	34.3	12.94	34.3	13.31	34.3	13.55	34.3	13.67	34.3	14.03
	-8.5	-9.1	35.1	12.70	35.1	13.06	35.1	13.43	35.1	13.67	35.1	13.79	35.1	14.15
	-7.0	-7.6	36.5	12.94	36.5	13.31	36.5	13.67	36.5	13.79	36.5	14.03	36.5	14.40
	-5.0	-5.6	38.5	13.31	38.5	13.55	38.5	13.91	38.5	14.03	38.5	14.27	38.5	14.52
	-3.0	-3.7	40.4	13.55	40.4	13.79	40.4	14.15	40.4	14.27	40.4	14.40	40.4	14.76
	0.0	-0.7	43.4	13.91	43.4	14.15	43.4	14.40	43.4	14.64	43.4	14.76	43.4	15.00
	3.0	2.2	46.2	14.15	46.2	14.40	46.2	14.76	46.2	14.88	46.2	15.00	43.6	14.03
	5.0	4.1	48.1	14.27	48.1	14.64	48.1	14.88	48.1	15.00	48.1	14.52	43.6	13.43
	7.0	6.0	50	14.52	50	14.76	50	15.00	48.4	14.40	46.8	13.91	43.6	12.82
	9.0	7.9	51.8	14.64	51.8	14.88	50	14.40	48.4	13.91	46.8	13.31	43.6	12.34
	11.0	9.8	53.7	14.76	53.2	14.88	50	13.79	48.4	13.31	46.8	12.82	43.6	11.87
	13.0	11.8	55.78	14.88	53.2	14.27	50	13.31	48.4	12.82	46.8	12.34	43.6	11.42
	15.0	13.7	56.4	14.64	53.2	13.79	50	12.82	48.4	12.34	46.8	11.90	43.6	11.02
	19.0	14.2	56.4	14.25	53.2	13.32	50	12.50	48.4	11.83	46.8	11.44	43.6	10.73
	21.0	15.0	56.4	13.80	53.2	12.74	50	12.03	48.4	11.65	46.8	11.10	43.6	10.49
90	-14.7	-15.0	29.3	12.34	29.3	12.70	29.3	13.06	29.3	13.31	29.3	13.43	29.3	13.79
	-12.6	-13.0	31.2	12.70	31.2	13.06	31.2	13.43	31.2	13.55	31.2	13.79	31.2	14.15
	-10.5	-11.0	33.2	13.06	33.2	13.43	33.2	13.79	33.2	13.91	33.2	14.03	33.2	14.40
	-9.5	-10.0	34.3	13.19	34.3	13.55	34.3	13.91	34.3	14.03	34.3	14.15	34.3	14.52
	-8.5	-9.1	35.1	13.31	35.1	13.67	35.1	14.03	35.1	14.15	35.1	14.27	35.1	14.64
	-7.0	-7.6	36.5	13.55	36.5	13.91	36.5	14.15	36.5	14.40	36.5	14.52	36.5	14.76
	-5.0	-5.6	38.5	13.79	38.5	14.15	38.5	14.40	38.5	14.52	38.5	14.76	38.5	15.00
	-3.0	-3.7	40.4	14.03	40.4	14.40	40.4	14.64	40.4	14.76	40.4	14.88	39.2	14.40
	0.0	-0.7	43.4	14.40	43.4	14.64	43.4	14.88	43.4	15.00	42.1	14.40	39.2	13.31
	3.0	2.2	46.2	14.64	46.2	14.88	45	14.52	43.5	14.03	42.1	13.43	39.2	12.46
	5.0	4.1	48.1	14.76	47.8	14.88	45	13.91	43.5	13.43	42.1	12.82	39.2	11.90
	7.0	6.0	50	14.88	47.8	14.27	45	13.31	43.5	12.82	42.1	12.34	39.2	11.43
	9.0	7.9	50.8	14.64	47.8	13.67	45	12.82	43.5	12.34	42.1	11.88	39.2	11.00
	11.0	9.8	50.8	14.03	47.8	13.19	45	12.34	43.5	11.85	42.1	11.43	39.2	10.60
	13.0	11.8	50.8	13.55	47.8	12.70	45	11.82	43.5	11.41	42.1	11.01	39.2	10.21
	15.0	13.7	50.8	13.06	47.8	12.22	45	11.41	43.5	11.02	42.1	10.63	39.2	9.86
	19.0	14.2	50.8	12.74	47.8	11.87	45	11.05	43.5	10.69	42.1	10.25	39.2	9.50
	21.0	15.0	50.8	12.28	47.8	11.43	45	10.84	43.5	10.34	42.1	9.89	39.2	9.12
80	-14.7	-15.0	29.3	13.06	29.3	13.43	29.3	13.79	29.3	13.91	29.3	14.03	29.3	14.40
	-12.6	-13.0	31.2	13.43	31.2	13.67	31.2	14.03	31.2	14.15	31.2	14.40	31.2	14.64
	-10.5	-11.0	33.2	13.67	33.2	14.03	33.2	14.27	33.2	14.52	33.2	14.64	33.2	14.88
	-9.5	-10.0	34.3	13.91	34.3	14.15	34.3	14.40	34.3	14.64	34.3	14.76	34.3	15.00
	-8.5	-9.1	35.1	14.03	35.1	14.27	35.1	14.52	35.1	14.76	35.1	14.88	34.8	14.76
	-7.0	-7.6	36.5	14.15	36.5	14.40	36.5	14.76	36.5	14.88	36.5	15.00	34.8	14.03
	-5.0	-5.6	38.5	14.40	38.5	14.64	38.5	14.88	38.6	15.00	37.4	14.40	34.8	13.31
	-3.0	-3.7	40.4	14.64	40.4	14.88	40	14.76	38.6	14.15	37.4	13.67	34.8	12.58
	0.0	-0.7	43.4	14.88	42.5	14.64	40	13.67	38.6	13.19	37.4	12.58	34.8	11.69
	3.0	2.2	45.1	14.52	42.5	13.67	40	12.70	38.6	12.22	37.4	11.81	34.8	10.94
	5.0	4.1	45.1	13.91	42.5	13.06	40	12.22	38.6	11.73	37.4	11.31	34.8	10.49
	7.0	6.0	45.1	13.31	42.5	12.46	40	11.67	38.6	11.27	37.4	10.88	34.8	10.09
	9.0	7.9	45.1	12.82	42.5	12.01	40	11.23	38.6	10.84	37.4	10.46	34.8	9.71
	11.0	9.8	45.1	12.34	42.5	11.56	40	10.81	38.6	10.45	37.4	10.09	34.8	9.36
	13.0	11.8	45.1	11.87	42.5	11.13	40	10.42	38.6	10.06	37.4	9.71	34.8	9.04
	15.0	13.7	45.1	11.46	42.5	10.65	40	10.06	38.6	9.73	37.4	9.40	34.8	8.75
	19.0	14.2	45.1	11.06	42.5	10.46	40	9.66	38.6	9.36	37.4	9.00	34.8	8.53
	21.0	15.0	45.1	10.75	42.5	10.01	40	9.41	38.6	9.06	37.4	8.69	34.8	8.08

heating

capacity factor(%)	outdoor temp.		indoor temp.℃WB											
			16.0		18.0		20.0		21.0		22.0		24.0	
			TC	PI	TC	PI	TC	PI	TC	PI	TC	PI	TC	PI
	℃DB	℃WB	KW	KW	KW	KW	KW	KW	KW	KW	KW	KW	KW	KW
70	-14.7	-15.0	29.3	13.79	29.3	14.15	29.3	14.40	29.3	14.52	29.3	14.64	29.3	15.00
	-12.6	-13.0	31.2	14.15	31.2	14.40	31.2	14.64	31.2	14.76	31.2	15.00	30.5	14.40
	-10.5	-11.0	33.2	14.40	33.2	14.64	33.2	14.88	33.2	15.00	32.7	14.52	30.5	13.43
	-9.5	-10.0	34.3	14.52	34.3	14.76	34.3	15.00	33.8	14.64	32.7	14.03	30.5	12.94
	-8.5	-9.1	35.1	14.64	35.1	14.88	35	14.76	33.8	14.27	32.7	13.67	30.5	12.70
	-7.0	-7.6	36.5	14.76	36.5	15.00	35	14.15	33.8	13.55	32.7	13.06	30.5	12.10
	-5.0	-5.6	38.5	15.00	37.2	14.27	35	13.31	33.8	12.82	32.7	12.34	30.5	11.46
	-3.0	-3.7	39.4	14.52	37.2	13.55	35	12.70	33.8	12.22	32.7	11.77	30.5	10.90
	0.0	-0.7	39.4	13.43	37.2	12.58	35	11.75	33.8	11.33	32.7	10.92	30.5	10.14
	3.0	2.2	39.4	12.58	37.2	11.75	35	10.97	33.8	10.60	32.7	10.23	30.5	9.50
	5.0	4.1	39.4	12.00	37.2	11.26	35	10.54	33.8	10.17	32.7	9.82	30.5	9.13
	7.0	6.0	39.4	11.52	37.2	10.81	35	10.13	33.8	9.79	32.7	9.45	30.5	8.79
	9.0	7.9	39.4	11.08	37.2	10.40	35	9.75	33.8	9.42	32.7	9.11	30.5	8.48
	11.0	9.8	39.4	10.67	37.2	10.03	35	9.41	33.8	9.10	32.7	8.72	30.5	8.19
	13.0	11.8	39.4	10.28	37.2	9.67	35	9.07	33.8	8.78	32.7	8.48	30.5	7.91
	15.0	13.7	39.4	9.93	37.2	9.35	35	8.78	33.8	8.49	32.7	8.21	30.5	7.67
	19.0	14.2	39.4	9.43	37.2	9.10	35	8.54	33.8	8.10	32.7	7.75	30.5	7.35
	21.0	15.0	39.4	9.10	37.2	8.65	35	8.15	33.8	7.73	32.7	7.36	30.5	6.95
60	-14.7	-15.0	29.3	14.52	29.3	14.76	29.3	15.00	29	14.52	28.1	14.03	26.1	12.94
	-12.6	-13.0	31.2	14.76	31.2	15.00	30	14.03	29	13.55	28.1	13.06	26.1	12.07
	-10.5	-11.0	33.2	15.00	31.8	14.15	30	13.19	29	12.70	28.1	12.22	26.1	11.32
	-9.5	-10.0	33.8	14.64	31.8	13.67	30	12.82	29	12.34	28.1	11.87	26.1	10.98
	-8.5	-9.1	33.8	14.27	31.8	13.31	30	12.46	29	11.99	28.1	11.55	26.1	10.71
	-7.0	-7.6	33.8	13.55	31.8	12.70	30	11.89	29	11.47	28.1	11.07	26.1	10.26
	-5.0	-5.6	33.8	12.82	31.8	12.04	30	11.25	29	10.86	28.1	10.48	26.1	9.73
	-3.0	-3.7	33.8	12.22	31.8	11.44	30	10.71	29	10.34	28.1	9.98	26.1	9.28
	0.0	-0.7	33.8	11.32	31.8	10.63	30	9.96	29	9.63	28.1	9.30	26.1	8.65
	3.0	2.2	33.8	10.60	31.8	9.96	30	9.34	29	9.04	28.1	8.73	26.1	8.14
	5.0	4.1	33.8	10.17	31.8	9.57	30	8.98	29	8.69	28.1	8.40	26.1	7.83
	7.0	6.0	33.8	9.77	31.8	9.21	30	8.65	29	8.37	28.1	8.09	26.1	7.55
	9.0	7.9	33.8	9.42	31.8	8.88	30	8.33	29	8.08	28.1	7.81	26.1	7.29
	11.0	9.8	33.8	9.10	31.8	8.56	30	8.06	29	7.80	28.1	7.55	26.1	7.06
	13.0	11.8	33.8	8.77	31.8	8.27	30	7.78	29	7.54	28.1	7.31	26.1	6.83
	15.0	13.7	33.8	8.49	31.8	8.01	30	7.54	29	7.31	28.1	7.08	26.1	6.63
	19.0	14.2	33.8	8.25	31.8	7.62	30	7.31	29	7.08	28.1	6.81	26.1	6.34
	21.0	15.0	33.8	7.91	31.8	7.40	30	7.00	29	6.85	28.1	6.59	26.1	6.10
50	-14.7	-15.0	28.2	14.03	26.5	13.19	25	12.34	24.2	11.88	23.4	11.44	21.7	10.61
	-12.6	-13.0	28.2	13.19	26.5	12.34	25	11.49	24.2	11.10	23.4	10.71	21.7	9.93
	-10.5	-11.0	28.2	12.34	26.5	11.54	25	10.79	24.2	10.43	23.4	10.06	21.7	9.35
	-9.5	-10.0	28.2	11.93	26.5	11.19	25	10.48	24.2	10.13	23.4	9.77	21.7	9.08
	-8.5	-9.1	28.2	11.61	26.5	10.90	25	10.21	24.2	9.86	23.4	9.52	21.7	8.85
	-7.0	-7.6	28.2	11.13	26.5	10.45	25	9.79	24.2	9.46	23.4	9.15	21.7	8.52
	-5.0	-5.6	28.2	10.54	26.5	9.91	25	9.29	24.2	8.99	23.4	8.69	21.7	8.09
	-3.0	-3.7	28.2	10.04	26.5	9.45	25	8.87	24.2	8.58	23.4	8.30	21.7	7.74
	0.0	-0.7	28.2	9.35	26.5	8.81	25	8.27	24.2	8.02	23.4	7.75	21.7	7.25
	3.0	2.2	28.2	8.77	26.5	8.27	25	7.79	24.2	7.55	23.4	7.31	21.7	6.83
	5.0	4.1	28.2	8.44	26.5	7.97	25	7.50	24.2	7.27	23.4	7.13	21.7	6.59
	7.0	6.0	28.2	8.13	26.5	7.68	25	7.23	24.2	7.02	23.4	6.80	21.7	6.38
	9.0	7.9	28.2	7.85	26.5	7.42	25	6.99	24.2	6.79	23.4	6.58	21.7	6.17
	11.0	9.8	28.2	7.58	26.5	7.17	25	6.77	24.2	6.57	23.4	6.38	21.7	5.98
	13.0	11.8	28.2	7.34	26.5	6.94	25	6.56	24.2	6.36	23.4	6.17	21.7	5.79
	15.0	13.7	28.2	7.11	26.5	6.74	25	6.36	24.2	6.18	23.4	5.99	21.7	5.64
	19.0	14.2	28.2	6.89	26.5	6.47	25	6.14	24.2	5.90	23.4	5.79	21.7	5.39
	21.0	15.0	28.2	6.44	26.5	6.29	25	5.98	24.2	5.66	23.4	5.56	21.7	5.18

6) 18HP capacity

heating

capacity factor(%)	outdoor temp.		indoor temp.℃WB											
			16.0		18.0		20.0		21.0		22.0		24.0	
			TC	PI	TC	PI	TC	PI	TC	PI	TC	PI	TC	PI
	℃DB	℃WB	KW	KW	KW	KW	KW	KW	KW	KW	KW	KW	KW	KW
130	-14.7	-15.0	36.0	10.3	36.0	10.9	36.0	11.5	35.9	11.8	35.9	12.2	35.9	12.8
	-12.6	-13.0	37.9	11.0	37.9	11.5	37.9	12.1	37.9	12.4	37.9	12.7	37.9	13.3
	-10.5	-11.0	39.8	11.5	39.8	12.1	39.8	12.6	39.8	12.9	39.8	13.2	39.8	13.7
	-9.5	-10.0	40.9	11.8	40.9	12.3	40.9	12.8	40.9	13.1	40.9	13.4	40.9	13.9
	-8.5	-9.1	41.8	12.0	41.8	12.5	41.8	13.0	41.8	13.3	41.8	13.5	41.8	14.1
	-7.0	-7.6	43.3	12.4	43.3	12.9	43.3	13.3	43.3	13.7	43.3	13.8	43.3	14.3
	-5.0	-5.6	45.2	12.8	45.2	13.2	45.2	13.7	45.2	13.9	45.2	14.2	45.2	14.6
	-3.0	-3.7	47.0	13.1	47.0	13.5	47.0	14.1	47.0	14.3	47.0	14.5	47.0	15.0
	0.0	-0.7	50.0	13.7	50.0	14.1	50.0	14.5	50.0	14.7	50.0	14.9	50.0	15.3
	3.0	2.2	52.8	14.1	52.8	14.5	52.8	14.9	52.8	15.0	52.8	15.3	52.8	15.7
	5.0	4.1	54.7	14.3	54.7	14.7	54.7	15.1	54.7	15.3	54.7	15.5	54.7	15.8
	7.0	6.0	56.5	14.6	56.5	15.0	56.5	15.26	56.5	15.5	56.5	15.7	56.5	16.1
	9.0	7.9	58.4	14.7	58.3	15.1	58.3	15.5	58.3	15.7	58.3	15.8	58.3	16.2
	11.0	9.8	60.3	15.0	60.3	15.3	60.3	15.7	60.3	15.8	60.3	16.1	60.3	16.3
	13.0	11.8	62.2	15.1	62.2	15.5	62.2	15.8	62.2	16.1	62.2	16.2	62.2	16.5
	15.0	13.7	64.0	15.4	64.0	15.7	64.0	15.9	64.0	16.2	64.0	16.3	64.0	16.3
	19.0	14.2	64.0	15.5	64.0	15.8	64.0	16.1	64.0	16.3	64.0	16.5	64.0	16.0
	21.0	15.0	64.0	15.7	64.0	16.0	64.0	16.2	64.0	16.4	64.0	16.2	64.0	15.8
120	-14.7	-15.0	36.0	11.2	35.9	11.7	35.9	12.3	35.9	12.6	35.9	12.8	35.9	13.4
	-12.6	-13.0	37.9	11.7	37.9	12.3	37.9	12.8	37.9	13.1	37.9	13.3	37.9	13.9
	-10.5	-11.0	39.8	12.3	39.8	12.8	39.8	13.3	39.8	13.5	39.8	13.8	39.8	14.3
	-9.5	-10.0	40.9	12.5	40.9	13.0	40.9	13.5	40.9	13.7	40.9	13.9	40.9	14.5
	-8.5	-9.1	41.8	12.7	41.8	13.2	41.8	13.7	41.8	13.9	41.8	14.2	41.8	14.6
	-7.0	-7.6	43.3	13.0	43.3	13.5	43.3	13.9	43.3	14.2	43.3	14.3	43.3	14.9
	-5.0	-5.6	45.2	13.4	45.2	13.8	45.2	14.3	45.2	14.5	45.2	14.7	45.2	15.1
	-3.0	-3.7	47.0	13.8	47.0	14.2	47.0	14.6	47.0	14.7	47.0	15.0	47.0	15.4
	0.0	-0.7	50.0	14.2	50.0	14.6	50.0	15.0	50.0	15.1	50.0	15.4	50.0	15.8
	3.0	2.2	52.8	14.6	52.8	15.0	52.8	15.4	52.8	15.5	52.8	15.7	52.8	16.1
	5.0	4.1	54.7	14.9	54.7	15.1	54.7	15.5	54.7	15.7	54.7	15.9	54.7	16.2
	7.0	6.0	56.5	15.0	56.5	15.4	56.5	15.8	56.5	15.9	56.5	16.1	56.5	16.5
	9.0	7.9	58.3	15.3	58.3	15.5	58.3	15.9	58.3	16.1	58.3	16.2	58.3	16.6
	11.0	9.8	60.3	15.4	60.3	15.8	60.3	16.1	60.2	16.2	60.2	16.3	59.0	16.1
	13.0	11.8	62.2	15.7	62.2	15.9	62.2	16.2	62.2	16.3	62.2	16.6	59.0	15.5
	15.0	13.7	64.0	15.8	64.0	16.1	64.0	16.3	64.0	16.5	63.8	16.2	59.0	14.9
	19.0	14.2	64.0	15.9	64.0	16.1	65.6	16.3	65.6	16.4	65.4	15.9	59.0	14.5
	21.0	15.0	64.0	16.1	64.0	16.2	66.4	16.4	66.4	16.3	66.2	15.4	59.0	14.2
110	-14.7	-15.0	35.9	12.0	35.9	12.5	35.9	13.0	35.9	13.3	35.9	13.5	35.9	14.1
	-12.6	-13.0	37.9	12.5	37.9	13.0	37.9	13.5	37.9	13.8	37.9	13.9	37.9	14.5
	-10.5	-11.0	39.8	13.0	39.8	13.4	39.8	13.9	39.8	14.2	39.8	14.3	39.8	14.9
	-9.5	-10.0	40.9	13.2	40.9	13.7	40.9	14.1	40.9	14.3	40.9	14.6	40.9	15.0
	-8.5	-9.1	41.8	13.4	41.8	13.8	41.8	14.3	41.8	14.5	41.8	14.7	41.8	15.1
	-7.0	-7.6	43.3	13.7	43.3	14.1	43.3	14.5	43.3	14.7	43.3	15.0	43.3	15.4
	-5.0	-5.6	45.2	14.1	45.2	14.5	45.2	14.9	45.2	15.0	45.2	15.3	45.2	15.7
	-3.0	-3.7	47.0	14.3	47.0	14.7	47.0	15.1	47.0	15.3	47.0	15.5	47.0	15.8
	0.0	-0.7	50.0	14.7	49.9	15.1	49.9	15.5	49.9	15.7	49.9	15.8	49.9	16.2
	3.0	2.2	52.8	15.1	52.8	15.5	52.8	15.8	52.8	15.9	52.8	16.2	52.8	16.5
	5.0	4.1	54.7	15.4	54.7	15.7	54.7	15.9	54.7	16.2	54.7	16.3	54.3	16.5
	7.0	6.0	56.5	15.5	56.5	15.8	56.5	16.2	56.5	16.3	56.5	16.5	54.3	15.8
	9.0	7.9	58.3	15.8	58.3	16.1	58.3	16.3	58.3	16.5	57.9	16.5	54.3	15.1
	11.0	9.8	60.3	15.9	60.2	16.2	60.2	16.5	60.1	16.5	57.9	15.8	54.3	14.6

heating

capacity factor(%)	outdoor temp.		indoor temp.℃WB											
			16.0		18.0		20.0		21.0		22.0		24.0	
			TC	PI	TC	PI	TC	PI	TC	PI	TC	PI	TC	PI
	℃DB	℃WB	KW	KW	KW	KW	KW	KW	KW	KW	KW	KW	KW	KW
110	13.0	11.8	62.2	16.1	62.2	16.3	62.2	16.3	60.1	15.8	57.9	15.1	54.3	14.1
	15.0	13.7	64.0	16.2	64.0	16.5	62.2	15.8	60.1	15.3	57.9	14.6	54.3	13.5
	19.0	14.2	64.0	15.1	64.0	16.3	62.2	15.3	60.1	14.6	57.9	14.1	54.3	13.1
	21.0	15.0	64.0	15.3	64.0	15.8	62.2	14.5	60.1	14.2	57.9	13.7	54.3	12.9
100	-14.7	-15.0	35.9	12.8	35.9	13.3	35.9	13.8	35.9	13.9	35.9	14.2	35.9	14.7
	-12.6	-13.0	37.9	13.3	37.9	13.8	37.9	14.2	37.9	14.3	37.9	14.6	37.9	15.0
	-10.5	-11.0	39.8	13.8	39.8	14.2	39.8	14.6	39.8	14.7	39.8	15.0	39.8	15.4
	-9.5	-10.0	40.9	13.9	40.9	14.3	40.9	14.7	40.9	15.0	40.9	15.1	40.9	15.5
	-8.5	-9.1	41.8	14.1	41.8	14.5	41.8	14.9	41.8	15.1	41.8	15.3	41.8	15.7
	-7.0	-7.6	43.3	14.3	43.3	14.7	43.3	15.1	43.3	15.3	43.3	15.5	43.3	15.9
	-5.0	-5.6	45.2	14.7	45.2	15.0	45.2	15.4	45.2	15.5	45.2	15.8	45.2	16.1
	-3.0	-3.7	47.0	15.0	47.0	15.3	47.0	15.7	47.0	15.8	47.0	15.9	47.0	16.3
	0.0	-0.7	49.9	15.4	49.9	15.7	49.9	15.9	49.9	16.2	49.9	16.3	49.3	16.6
	3.0	2.2	52.8	15.7	52.8	15.9	52.8	16.3	52.8	16.5	52.8	16.6	49.3	15.5
	5.0	4.1	54.7	15.8	54.7	16.2	54.7	16.5	54.7	16.6	53.0	16.1	49.3	14.9
	7.0	6.0	56.5	16.1	56.5	16.3	56.5	16.6	54.7	15.9	53.0	15.4	49.3	14.2
	9.0	7.9	58.3	16.2	58.3	16.5	56.5	15.9	54.7	15.4	53.0	14.7	49.3	13.7
	11.0	9.8	60.2	16.3	60.1	16.5	56.5	15.3	54.7	14.7	53.0	14.2	49.3	13.1
	13.0	11.8	62.2	16.5	60.1	15.8	56.5	14.7	54.7	14.2	53.0	13.7	49.3	12.6
	15.0	13.7	63.7	16.2	60.1	15.3	56.5	14.2	54.7	13.7	53.0	13.2	49.3	12.2
	19.0	14.2	63.7	15.8	60.1	14.7	56.5	13.8	54.7	13.1	53.0	12.7	49.3	11.9
	21.0	15.0	63.7	15.3	60.1	14.1	56.5	13.3	54.7	12.9	53.0	12.3	49.3	11.6
90	-14.7	-15.0	35.9	13.7	35.9	14.1	35.9	14.5	35.9	14.7	35.9	14.9	35.9	15.3
	-12.6	-13.0	37.9	14.1	37.9	14.5	37.9	14.9	37.9	15.0	37.9	15.3	37.9	15.7
	-10.5	-11.0	39.8	14.5	39.8	14.9	39.8	15.3	39.8	15.4	39.8	15.5	39.8	15.9
	-9.5	-10.0	40.9	14.6	40.9	15.0	40.9	15.4	40.9	15.5	40.9	15.7	40.9	16.1
	-8.5	-9.1	41.8	14.7	41.8	15.1	41.8	15.5	41.8	15.7	41.8	15.8	41.8	16.2
	-7.0	-7.6	43.3	15.0	43.3	15.4	43.3	15.7	43.3	15.9	43.3	16.1	43.2	16.3
	-5.0	-5.6	45.2	15.3	45.2	15.7	45.2	15.9	45.2	16.1	45.2	16.3	44.2	16.6
	-3.0	-3.7	47.0	15.5	47.0	15.9	47.0	16.2	47.0	16.3	47.0	16.5	44.2	15.9
	0.0	-0.7	49.9	15.9	49.9	16.2	49.9	16.5	49.1	16.6	47.6	15.9	44.2	14.7
	3.0	2.2	52.8	16.2	52.8	16.5	50.8	16.1	49.1	15.5	47.6	14.9	44.2	13.8
	5.0	4.1	54.7	16.3	54.2	16.5	50.8	15.4	49.1	14.9	47.6	14.2	44.2	13.2
	7.0	6.0	56.5	16.5	54.2	15.8	50.8	14.7	49.1	14.2	47.6	13.7	44.2	12.7
	9.0	7.9	57.5	16.2	54.2	15.1	50.8	14.2	49.1	13.7	47.6	13.1	44.2	12.2
	11.0	9.8	57.5	15.5	54.2	14.6	50.8	13.7	49.1	13.1	47.6	12.7	44.2	11.7
	13.0	11.8	57.5	15.0	54.2	14.1	50.8	13.1	49.1	12.6	47.6	12.2	44.2	11.3
	15.0	13.7	57.5	14.5	54.2	13.5	50.8	12.6	49.1	12.2	47.6	11.8	44.2	10.9
	19.0	14.2	57.5	14.1	54.2	13.1	50.8	12.2	49.1	11.8	47.6	11.3	44.2	10.5
	21.0	15.0	57.5	13.6	54.2	12.7	50.8	12.0	49.1	11.4	47.6	10.9	44.2	10.1
80	-14.7	-15.0	35.9	14.5	35.9	14.9	35.9	15.3	35.9	15.4	35.9	15.5	35.9	15.9
	-12.6	-13.0	37.9	14.9	37.9	15.1	37.9	15.5	37.9	15.7	37.9	15.9	37.9	16.2
	-10.5	-11.0	39.8	15.1	39.8	15.5	39.8	15.8	39.8	16.1	39.8	16.2	39.5	16.5
	-9.5	-10.0	40.9	15.4	40.9	15.7	40.9	15.9	40.9	16.2	40.9	16.3	39.5	16.6
	-8.5	-9.1	41.8	15.5	41.8	15.8	41.8	16.1	41.8	16.3	41.8	16.5	39.5	16.3
	-7.0	-7.6	43.3	15.7	43.3	15.9	43.2	16.3	43.2	16.5	42.3	16.6	39.5	15.5
	-5.0	-5.6	45.2	15.9	45.2	16.2	45.2	16.5	43.8	16.6	42.3	15.9	39.5	14.7
	-3.0	-3.7	47.0	16.2	47.0	16.5	45.2	16.3	43.8	15.7	42.3	15.1	39.5	13.9
	0.0	-0.7	49.9	16.5	48.1	16.2	45.2	15.1	43.8	14.6	42.3	13.9	39.5	12.9
	3.0	2.2	50.9	16.1	48.1	15.1	45.2	14.1	43.8	13.5	42.3	13.1	39.5	12.1
	5.0	4.1	50.9	15.4	48.1	14.5	45.2	13.5	43.8	13.0	42.3	12.5	39.5	11.6
	7.0	6.0	50.9	14.7	48.1	13.8	45.2	12.9	43.8	12.5	42.3	12.0	39.5	11.2
	9.0	7.9	50.9	14.2	48.1	13.3	45.2	12.4	43.8	12.0	42.3	11.6	39.5	10.7
	11.0	9.8	50.9	13.7	48.1	12.8	45.2	12.0	43.8	11.6	42.3	11.2	39.5	10.4
	13.0	11.8	50.9	13.1	48.1	12.3	45.2	11.5	43.8	11.1	42.3	10.7	39.5	10.0
	15.0	13.7	50.9	12.7	48.1	11.8	45.2	11.1	43.8	10.8	42.3	10.4	39.5	9.7
	19.0	14.2	50.9	12.2	48.1	11.6	45.2	10.7	43.8	10.4	42.3	10.0	39.5	9.4
	21.0	15.0	50.9	11.9	48.1	11.1	45.2	10.4	43.8	10.0	42.3	9.6	39.5	8.9

heating

capacity factor(%)	outdoor temp.		indoor temp.℃WB											
			16.0		18.0		20.0		21.0		22.0		24.0	
			TC	PI	TC	PI	TC	PI	TC	PI	TC	PI	TC	PI
	℃DB	℃WB	KW	KW	KW	KW	KW	KW	KW	KW	KW	KW	KW	KW
70	-14.7	-15.0	35.9	15.3	35.9	15.7	35.9	15.9	35.9	16.1	35.9	16.2	34.5	16.6
	-12.6	-13.0	37.9	15.7	37.9	15.9	37.9	16.2	37.9	16.3	37.1	16.6	34.5	15.9
	-10.5	-11.0	39.8	15.9	39.8	16.2	39.6	16.5	38.2	16.6	37.1	16.1	34.5	14.9
	-9.5	-10.0	40.9	16.1	40.9	16.3	39.6	16.6	38.2	16.2	37.1	15.5	34.5	14.3
	-8.5	-9.1	41.8	16.2	41.8	16.5	39.6	16.3	38.2	15.8	37.1	15.1	34.5	14.1
	-7.0	-7.6	43.2	16.3	42.1	16.6	39.6	15.7	38.2	15.0	37.1	14.5	34.5	13.4
	-5.0	-5.6	44.6	16.6	42.1	15.8	39.6	14.7	38.2	14.2	37.1	13.7	34.5	12.7
	-3.0	-3.7	44.6	16.1	42.1	15.0	39.6	14.1	38.2	13.5	37.1	13.0	34.5	12.1
	0.0	-0.7	44.6	14.9	42.1	13.9	39.6	13.0	38.2	12.5	37.1	12.1	34.5	11.2
	3.0	2.2	44.6	13.9	42.1	13.0	39.6	12.1	38.2	11.7	37.1	11.3	34.5	10.5
	5.0	4.1	44.6	13.3	42.1	12.5	39.6	11.7	38.2	11.3	37.1	10.9	34.5	10.1
	7.0	6.0	44.6	12.7	42.1	12.0	39.6	11.2	38.2	10.8	37.1	10.5	34.5	9.7
	9.0	7.9	44.6	12.3	42.1	11.5	39.6	10.8	38.2	10.4	37.1	10.1	34.5	9.4
	11.0	9.8	44.6	11.8	42.1	11.1	39.6	10.4	38.2	10.1	37.1	9.7	34.5	9.1
	13.0	11.8	44.6	11.4	42.1	10.7	39.6	10.0	38.2	9.7	37.1	9.4	34.5	8.8
	15.0	13.7	44.6	11.0	42.1	10.3	39.6	9.7	38.2	9.4	37.1	9.1	34.5	8.5
	19.0	14.2	44.6	10.4	42.1	10.1	39.6	9.5	38.2	9.0	37.1	8.6	34.5	8.1
	21.0	15.0	44.6	10.1	42.1	9.6	39.6	9.0	38.2	8.5	37.1	8.1	34.5	7.7
60	-14.7	-15.0	35.9	16.1	35.9	16.3	33.9	16.6	32.8	16.1	31.7	15.5	29.6	14.3
	-12.6	-13.0	37.9	16.3	36.1	16.6	33.9	15.5	32.8	15.0	31.7	14.5	29.6	13.4
	-10.5	-11.0	38.2	16.6	36.1	15.7	33.9	14.6	32.8	14.1	31.7	13.5	29.6	12.5
	-9.5	-10.0	38.2	16.2	36.1	15.1	33.9	14.2	32.8	13.7	31.7	13.1	29.6	12.2
	-8.5	-9.1	38.2	15.8	36.1	14.7	33.9	13.8	32.8	13.3	31.7	12.8	29.6	11.8
	-7.0	-7.6	38.2	15.0	36.1	14.1	33.9	13.2	32.8	12.7	31.7	12.2	29.6	11.4
	-5.0	-5.6	38.2	14.2	36.1	13.3	33.9	12.5	32.8	12.0	31.7	11.6	29.6	10.8
	-3.0	-3.7	38.2	13.5	36.1	12.7	33.9	11.8	32.8	11.4	31.7	11.0	29.6	10.3
	0.0	-0.7	38.2	12.5	36.1	11.8	33.9	11.0	32.8	10.7	31.7	10.3	29.6	9.6
	3.0	2.2	38.2	11.7	36.1	11.0	33.9	10.3	32.8	10.0	31.7	9.7	29.6	9.0
	5.0	4.1	38.2	11.3	36.1	10.6	33.9	9.9	32.8	9.6	31.7	9.3	29.6	8.7
	7.0	6.0	38.2	10.8	36.1	10.2	33.9	9.6	32.8	9.3	31.7	9.0	29.6	8.4
	9.0	7.9	38.2	10.4	36.1	9.8	33.9	9.2	32.8	8.9	31.7	8.6	29.6	8.1
	11.0	9.8	38.2	10.1	36.1	9.5	33.9	8.9	32.8	8.6	31.7	8.4	29.6	7.8
	13.0	11.8	38.2	9.7	36.1	9.2	33.9	8.6	32.8	8.3	31.7	8.1	29.6	7.6
	15.0	13.7	38.2	9.4	36.1	8.9	33.9	8.3	32.8	8.1	31.7	7.8	29.6	7.3
	19.0	14.2	38.2	9.1	36.1	8.4	33.9	8.1	32.8	7.8	31.7	7.5	29.6	7.0
	21.0	15.0	38.2	8.8	36.1	8.2	33.9	7.7	32.8	7.6	31.7	7.3	29.6	6.7
50	-14.7	-15.0	31.9	15.5	30.1	14.6	28.3	13.7	27.3	13.1	26.4	12.7	24.6	11.7
	-12.6	-13.0	31.9	14.6	30.1	13.7	28.3	12.7	27.3	12.3	26.4	11.8	24.6	11.0
	-10.5	-11.0	31.9	13.7	30.1	12.8	28.3	11.9	27.3	11.5	26.4	11.1	24.6	10.3
	-9.5	-10.0	31.9	13.2	30.1	12.4	28.3	11.6	27.3	11.2	26.4	10.8	24.6	10.1
	-8.5	-9.1	31.9	12.9	30.1	12.1	28.3	11.3	27.3	10.9	26.4	10.5	24.6	9.8
	-7.0	-7.6	31.9	12.3	30.1	11.6	28.3	10.8	27.3	10.5	26.4	10.1	24.6	9.4
	-5.0	-5.6	31.9	11.7	30.1	11.0	28.3	10.3	27.3	9.9	26.4	9.6	24.6	9.0
	-3.0	-3.7	31.9	11.1	30.1	10.5	28.3	9.8	27.3	9.5	26.4	9.2	24.6	8.6
	0.0	-0.7	31.9	10.3	30.1	9.7	28.3	9.2	27.3	8.9	26.4	8.6	24.6	8.0
	3.0	2.2	31.9	9.7	30.1	9.2	28.3	8.6	27.3	8.4	26.4	8.1	24.6	7.6
	5.0	4.1	31.9	9.3	30.1	8.8	28.3	8.3	27.3	8.0	26.4	7.6	24.6	7.3
	7.0	6.0	31.9	9.0	30.1	8.5	28.3	8.0	27.3	7.8	26.4	7.5	24.6	7.1
	9.0	7.9	31.9	8.7	30.1	8.2	28.3	7.7	27.3	7.5	26.4	7.3	24.6	6.8
	11.0	9.8	31.9	8.4	30.1	7.9	28.3	7.5	27.3	7.3	26.4	7.1	24.6	6.6
	13.0	11.8	31.9	8.1	30.1	7.7	28.3	7.3	27.3	7.0	26.4	6.8	24.6	6.4
	15.0	13.7	31.9	7.9	30.1	7.5	28.3	7.0	27.3	6.8	26.4	6.6	24.6	6.2
	19.0	14.2	31.9	7.6	30.1	7.2	28.3	6.8	27.3	6.5	26.4	6.4	24.6	6.0
	21.0	15.0	31.9	7.1	30.1	7.0	28.3	6.6	27.3	6.3	26.4	6.2	24.6	5.7

7) 20HP capacity

heating

capacity factor(%)	outdoor temp.		indoor temp.℃WB											
			16.0		18.0		20.0		21.0		22.0		24.0	
			TC	PI	TC	PI	TC	PI	TC	PI	TC	PI	TC	PI
	℃DB	℃WB	KW	KW	KW	KW	KW	KW	KW	KW	KW	KW	KW	KW
130	-14.7	-15.0	40.2	11.9	40.2	12.7	40.2	13.3	40.0	13.7	40.0	14.1	40.0	14.8
	-12.6	-13.0	42.2	12.7	42.2	13.3	42.2	14.0	42.2	14.3	42.2	14.7	42.2	15.3
	-10.5	-11.0	44.4	13.3	44.4	14.0	44.4	14.6	44.4	14.9	44.4	15.2	44.4	15.8
	-9.5	-10.0	45.6	13.6	45.6	14.2	45.6	14.8	45.6	15.2	45.6	15.5	45.6	16.1
	-8.5	-9.1	46.6	13.9	46.6	14.5	46.6	15.1	46.6	15.4	46.6	15.6	46.6	16.3
	-7.0	-7.6	48.4	14.3	48.4	14.9	48.4	15.4	48.4	15.8	48.4	15.9	48.4	16.6
	-5.0	-5.6	50.4	14.8	50.4	15.3	50.4	15.8	50.4	16.1	50.4	16.4	50.4	16.9
	-3.0	-3.7	52.4	15.2	52.4	15.6	52.4	16.3	52.4	16.6	52.4	16.7	52.4	17.3
	0.0	-0.7	55.8	15.8	55.8	16.3	55.8	16.7	55.8	17.0	55.8	17.2	55.8	17.7
	3.0	2.2	58.6	16.3	58.6	16.7	58.6	17.2	58.6	17.3	58.6	17.7	58.6	18.1
	5.0	4.1	61.0	16.6	61.0	17.0	61.0	17.5	61.0	17.7	61.0	18.0	61.0	18.3
	7.0	6.0	63.0	16.9	63.0	17.3	63.0	17.7	63.0	18.0	63.0	18.1	63.0	18.6
	9.0	7.9	65.2	17.0	65.0	17.5	65.0	18.0	65.0	18.1	65.0	18.3	65.0	18.7
	11.0	9.8	67.2	17.3	67.2	17.7	67.2	18.1	67.2	18.3	67.2	18.6	67.2	18.9
	13.0	11.8	69.4	17.5	69.4	18.0	69.4	18.3	69.4	18.6	69.4	18.7	69.4	19.0
	15.0	13.7	71.4	17.8	71.4	18.1	71.4	18.4	71.4	18.7	71.4	18.9	71.4	18.9
	19.0	14.2	71.4	18.0	71.4	18.3	71.4	18.6	71.4	18.9	71.4	19.1	71.4	18.5
	21.0	15.0	71.4	18.1	71.4	18.5	71.4	18.8	71.4	19.0	71.4	18.8	71.4	18.3
120	-14.7	-15.0	40.2	12.9	40.0	13.5	40.0	14.2	40.0	14.5	40.0	14.8	40.0	15.5
	-12.6	-13.0	42.2	13.6	42.2	14.2	42.2	14.8	42.2	15.1	42.2	15.4	42.2	16.1
	-10.5	-11.0	44.4	14.2	44.4	14.8	44.4	15.3	44.4	15.6	44.4	15.9	44.4	16.6
	-9.5	-10.0	45.6	14.5	45.6	15.0	45.6	15.6	45.6	15.8	45.6	16.1	45.6	16.7
	-8.5	-9.1	46.6	14.7	46.6	15.2	46.6	15.8	46.6	16.1	46.6	16.4	46.6	16.9
	-7.0	-7.6	48.4	15.1	48.4	15.6	48.4	16.1	48.4	16.4	48.4	16.6	48.4	17.2
	-5.0	-5.6	50.4	15.5	50.4	15.9	50.4	16.6	50.4	16.7	50.4	17.0	50.4	17.5
	-3.0	-3.7	52.4	15.9	52.4	16.4	52.4	16.9	52.4	17.0	52.4	17.3	52.4	17.8
	0.0	-0.7	55.8	16.4	55.8	16.9	55.8	17.3	55.8	17.5	55.8	17.8	55.8	18.3
	3.0	2.2	58.6	16.9	58.6	17.3	58.6	17.8	58.6	18.0	58.6	18.1	58.6	18.6
	5.0	4.1	61.0	17.2	61.0	17.5	61.0	18.0	61.0	18.1	61.0	18.4	61.0	18.7
	7.0	6.0	63.0	17.3	63.0	17.8	63.0	18.3	63.0	18.4	63.0	18.6	63.0	19.0
	9.0	7.9	65.0	17.7	65.0	18.0	65.0	18.4	65.0	18.6	65.0	18.7	65.0	19.2
	11.0	9.8	67.2	17.8	67.2	18.3	67.2	18.6	67.2	18.7	67.2	18.9	65.8	18.6
	13.0	11.8	69.4	18.1	69.4	18.4	69.4	18.7	69.4	18.9	69.4	19.2	65.8	18.0
	15.0	13.7	71.4	18.3	71.4	18.6	71.4	18.9	71.4	19.0	71.4	18.7	65.8	17.2
	19.0	14.2	71.4	18.4	71.4	18.7	71.4	18.9	71.4	18.9	71.4	18.4	65.8	16.8
	21.0	15.0	71.4	18.6	71.4	18.9	71.4	19.0	71.4	18.7	71.4	17.9	65.8	16.5
110	-14.7	-15.0	40.0	13.8	40.0	14.4	40.0	15.0	40.0	15.3	40.0	15.6	40.0	16.3
	-12.6	-13.0	42.2	14.5	42.2	15.0	42.2	15.6	42.2	15.9	42.2	16.1	42.2	16.7
	-10.5	-11.0	44.4	15.0	44.4	15.5	44.4	16.1	44.4	16.4	44.4	16.6	44.4	17.2
	-9.5	-10.0	45.6	15.3	45.6	15.8	45.6	16.3	45.6	16.6	45.6	16.9	45.6	17.3
	-8.5	-9.1	46.6	15.5	46.6	15.9	46.6	16.6	46.6	16.7	46.6	17.0	46.6	17.5
	-7.0	-7.6	48.4	15.8	48.4	16.3	48.4	16.7	48.4	17.0	48.4	17.3	48.4	17.8
	-5.0	-5.6	50.4	16.3	50.4	16.7	50.4	17.2	50.4	17.3	50.4	17.7	50.4	18.1
	-3.0	-3.7	52.4	16.6	52.4	17.0	52.4	17.5	52.4	17.7	52.4	18.0	52.4	18.3
	0.0	-0.7	55.8	17.0	55.6	17.5	55.6	18.0	55.6	18.1	55.6	18.3	55.6	18.7
	3.0	2.2	58.6	17.5	58.6	18.0	58.6	18.3	58.6	18.4	58.6	18.7	58.6	19.0
	5.0	4.1	61.0	17.8	61.0	18.1	61.0	18.4	61.0	18.7	61.0	18.9	60.4	19.0
	7.0	6.0	63.0	18.0	63.0	18.3	63.0	18.7	63.0	18.9	63.0	19.0	60.4	18.3
	9.0	7.9	65.0	18.3	65.0	18.6	65.0	18.9	65.0	19.0	64.6	19.0	60.4	17.5
	11.0	9.8	67.2	18.4	67.2	18.7	67.2	19.0	67.0	19.0	64.6	18.3	60.4	16.9

heating

capacity factor(%)	outdoor temp.		indoor temp.℃WB											
			16.0		18.0		20.0		21.0		22.0		24.0	
			TC	PI	TC	PI	TC	PI	TC	PI	TC	PI	TC	PI
	℃DB	℃WB	KW	KW	KW	KW	KW	KW	KW	KW	KW	KW	KW	KW
110	13.0	11.8	69.4	18.6	69.4	18.9	69.4	18.9	67.0	18.3	64.6	17.5	60.4	16.3
	15.0	13.7	71.4	18.7	71.4	19.0	69.4	18.3	67.0	17.7	64.6	16.9	60.4	15.6
	19.0	14.2	71.4	17.5	71.4	18.9	69.4	17.7	67.0	16.9	64.6	16.3	60.4	15.1
	21.0	15.0	71.4	17.7	71.4	18.3	69.4	16.7	67.0	16.4	64.6	15.9	60.4	14.9
100	-14.7	-15.0	40.0	14.8	40.0	15.3	40.0	15.9	40.0	16.1	40.0	16.4	40.0	17.0
	-12.6	-13.0	42.2	15.4	42.2	15.9	42.2	16.4	42.2	16.6	42.2	16.9	42.2	17.3
	-10.5	-11.0	44.4	15.9	44.4	16.4	44.4	16.9	44.4	17.0	44.4	17.3	44.4	17.8
	-9.5	-10.0	45.6	16.1	45.6	16.6	45.6	17.0	45.6	17.3	45.6	17.5	45.6	18.0
	-8.5	-9.1	46.6	16.3	46.6	16.7	46.6	17.2	46.6	17.5	46.6	17.7	46.6	18.1
	-7.0	-7.6	48.4	16.6	48.4	17.0	48.4	17.5	48.4	17.7	48.4	18.0	48.4	18.4
	-5.0	-5.6	50.4	17.0	50.4	17.3	50.4	17.8	50.4	18.0	50.4	18.3	50.4	18.6
	-3.0	-3.7	52.4	17.3	52.4	17.7	52.4	18.1	52.4	18.3	52.4	18.4	52.4	18.9
	0.0	-0.7	55.6	17.8	55.6	18.1	55.6	18.4	55.6	18.7	55.6	18.9	55.0	19.2
	3.0	2.2	58.6	18.1	58.6	18.4	58.6	18.9	58.6	19.0	58.6	19.2	55.0	18.0
	5.0	4.1	61.0	18.3	61.0	18.7	61.0	19.0	61.0	19.2	59.0	18.6	55.0	17.2
	7.0	6.0	63.0	18.6	63.0	18.9	63.0	19.2	61.0	18.4	59.0	17.8	55.0	16.4
	9.0	7.9	65.0	18.7	65.0	19.0	63.0	18.4	61.0	17.8	59.0	17.0	55.0	15.8
	11.0	9.8	67.2	18.9	67.0	19.0	63.0	17.7	61.0	17.0	59.0	16.4	55.0	15.2
	13.0	11.8	69.4	19.0	67.0	18.3	63.0	17.0	61.0	16.4	59.0	15.8	55.0	14.6
	15.0	13.7	71.0	18.7	67.0	17.7	63.0	16.4	61.0	15.8	59.0	15.2	55.0	14.1
	19.0	14.2	71.0	18.2	67.0	17.0	63.0	16.0	61.0	15.1	59.0	14.6	55.0	13.7
	21.0	15.0	71.0	17.7	67.0	16.3	63.0	15.4	61.0	14.9	59.0	14.2	55.0	13.4
90	-14.7	-15.0	40.0	15.8	40.0	16.3	40.0	16.7	40.0	17.0	40.0	17.2	40.0	17.7
	-12.6	-13.0	42.2	16.3	42.2	16.7	42.2	17.2	42.2	17.3	42.2	17.7	42.2	18.1
	-10.5	-11.0	44.4	16.7	44.4	17.2	44.4	17.7	44.4	17.8	44.4	18.0	44.4	18.4
	-9.5	-10.0	45.6	16.9	45.6	17.3	45.6	17.8	45.6	18.0	45.6	18.1	45.6	18.6
	-8.5	-9.1	46.6	17.0	46.6	17.5	46.6	18.0	46.6	18.1	46.6	18.3	46.6	18.7
	-7.0	-7.6	48.4	17.3	48.4	17.8	48.4	18.1	48.4	18.4	48.4	18.6	48.2	18.9
	-5.0	-5.6	50.4	17.7	50.4	18.1	50.4	18.4	50.4	18.6	50.4	18.9	49.2	19.2
	-3.0	-3.7	52.4	18.0	52.4	18.4	52.4	18.7	52.4	18.9	52.4	19.0	49.2	18.4
	0.0	-0.7	55.6	18.4	55.6	18.7	55.6	19.0	54.6	19.2	53.0	18.4	49.2	17.0
	3.0	2.2	58.6	18.7	58.6	19.0	56.6	18.6	54.6	18.0	53.0	17.2	49.2	15.9
	5.0	4.1	61.0	18.9	60.6	19.0	56.6	17.8	54.6	17.2	53.0	16.4	49.2	15.2
	7.0	6.0	63.0	19.0	60.6	18.3	56.6	17.0	54.6	16.4	53.0	15.8	49.2	14.6
	9.0	7.9	64.0	18.7	60.6	17.5	56.6	16.4	54.6	15.8	53.0	15.2	49.2	14.1
	11.0	9.8	64.0	18.0	60.6	16.9	56.6	15.8	54.6	15.2	53.0	14.6	49.2	13.6
	13.0	11.8	64.0	17.3	60.6	16.3	56.6	15.1	54.6	14.6	53.0	14.1	49.2	13.1
	15.0	13.7	64.0	16.7	60.6	15.6	56.6	14.6	54.6	14.1	53.0	13.6	49.2	12.6
	19.0	14.2	64.0	16.3	60.6	15.2	56.6	14.1	54.6	13.7	53.0	13.1	49.2	12.2
	21.0	15.0	64.0	15.7	60.6	14.6	56.6	13.9	54.6	13.2	53.0	12.7	49.2	11.7
80	-14.7	-15.0	40.0	16.7	40.0	17.2	40.0	17.7	40.0	17.8	40.0	18.0	40.0	18.4
	-12.6	-13.0	42.2	17.2	42.2	17.5	42.2	18.0	42.2	18.1	42.2	18.4	42.2	18.7
	-10.5	-11.0	44.4	17.5	44.4	18.0	44.4	18.3	44.4	18.6	44.4	18.7	44.0	19.0
	-9.5	-10.0	45.6	17.8	45.6	18.1	45.6	18.4	45.6	18.7	45.6	18.9	44.0	19.2
	-8.5	-9.1	46.6	18.0	46.6	18.3	46.6	18.6	46.6	18.9	46.6	19.0	44.0	18.9
	-7.0	-7.6	48.4	18.1	48.4	18.4	48.2	18.9	48.2	19.0	47.2	19.2	44.0	18.0
	-5.0	-5.6	50.4	18.4	50.4	18.7	50.4	19.0	48.6	19.2	47.2	18.4	44.0	17.0
	-3.0	-3.7	52.4	18.7	52.4	19.0	50.4	18.9	48.6	18.1	47.2	17.5	44.0	16.1
	0.0	-0.7	55.6	19.0	53.6	18.7	50.4	17.5	48.6	16.9	47.2	16.1	44.0	15.0
	3.0	2.2	56.6	18.6	53.6	17.5	50.4	16.3	48.6	15.6	47.2	15.1	44.0	14.0
	5.0	4.1	56.6	17.8	53.6	16.7	50.4	15.6	48.6	15.0	47.2	14.5	44.0	13.4
	7.0	6.0	56.6	17.0	53.6	15.9	50.4	14.9	48.6	14.4	47.2	13.9	44.0	12.9
	9.0	7.9	56.6	16.4	53.6	15.4	50.4	14.4	48.6	13.9	47.2	13.4	44.0	12.4
	11.0	9.8	56.6	15.8	53.6	14.8	50.4	13.8	48.6	13.4	47.2	12.9	44.0	12.0
	13.0	11.8	56.6	15.2	53.6	14.2	50.4	13.3	48.6	12.9	47.2	12.4	44.0	11.6
	15.0	13.7	56.6	14.7	53.6	13.6	50.4	12.9	48.6	12.4	47.2	12.0	44.0	11.2
	19.0	14.2	56.6	14.2	53.6	13.4	50.4	12.4	48.6	12.0	47.2	11.5	44.0	10.9
	21.0	15.0	56.6	13.8	53.6	12.8	50.4	12.0	48.6	11.6	47.2	11.1	44.0	10.3

heating

capacity factor(%)	outdoor temp.		indoor temp.℃WB											
			16.0		18.0		20.0		21.0		22.0		24.0	
			TC	PI	TC	PI	TC	PI	TC	PI	TC	PI	TC	PI
	℃DB	℃WB	KW	KW	KW	KW	KW	KW	KW	KW	KW	KW	KW	KW
70	-14.7	-15.0	40.0	17.7	40.0	18.1	40.0	18.4	40.0	18.6	40.0	18.7	38.4	19.2
	-12.6	-13.0	42.2	18.1	42.2	18.4	42.2	18.7	42.2	18.9	41.2	19.2	38.4	18.4
	-10.5	-11.0	44.4	18.4	44.4	18.7	44.2	19.0	42.6	19.2	41.2	18.6	38.4	17.2
	-9.5	-10.0	45.6	18.6	45.6	18.9	44.2	19.2	42.6	18.7	41.2	18.0	38.4	16.6
	-8.5	-9.1	46.6	18.7	46.6	19.0	44.2	18.9	42.6	18.3	41.2	17.5	38.4	16.3
	-7.0	-7.6	48.2	18.9	47.0	19.2	44.2	18.1	42.6	17.3	41.2	16.7	38.4	15.5
	-5.0	-5.6	49.8	19.2	47.0	18.3	44.2	17.0	42.6	16.4	41.2	15.8	38.4	14.7
	-3.0	-3.7	49.8	18.6	47.0	17.3	44.2	16.3	42.6	15.6	41.2	15.1	38.4	14.0
	0.0	-0.7	49.8	17.2	47.0	16.1	44.2	15.0	42.6	14.5	41.2	14.0	38.4	13.0
	3.0	2.2	49.8	16.1	47.0	15.0	44.2	14.0	42.6	13.6	41.2	13.1	38.4	12.2
	5.0	4.1	49.8	15.4	47.0	14.4	44.2	13.5	42.6	13.0	41.2	12.6	38.4	11.7
	7.0	6.0	49.8	14.7	47.0	13.8	44.2	13.0	42.6	12.5	41.2	12.1	38.4	11.3
	9.0	7.9	49.8	14.2	47.0	13.3	44.2	12.5	42.6	12.1	41.2	11.7	38.4	10.9
	11.0	9.8	49.8	13.7	47.0	12.8	44.2	12.0	42.6	11.6	41.2	11.2	38.4	10.5
	13.0	11.8	49.8	13.2	47.0	12.4	44.2	11.6	42.6	11.2	41.2	10.9	38.4	10.1
	15.0	13.7	49.8	12.7	47.0	12.0	44.2	11.2	42.6	10.9	41.2	10.5	38.4	9.8
	19.0	14.2	49.8	12.1	47.0	11.6	44.2	10.9	42.6	10.4	41.2	9.9	38.4	9.4
	21.0	15.0	49.8	11.6	47.0	11.1	44.2	10.4	42.6	9.9	41.2	9.4	38.4	8.9
60	-14.7	-15.0	40.0	18.6	40.0	18.9	37.8	19.2	36.6	18.6	35.4	18.0	33.0	16.6
	-12.6	-13.0	42.2	18.9	40.2	19.2	37.8	18.0	36.6	17.3	35.4	16.7	33.0	15.5
	-10.5	-11.0	42.6	19.2	40.2	18.1	37.8	16.9	36.6	16.3	35.4	15.6	33.0	14.5
	-9.5	-10.0	42.6	18.7	40.2	17.5	37.8	16.4	36.6	15.8	35.4	15.2	33.0	14.1
	-8.5	-9.1	42.6	18.3	40.2	17.0	37.8	15.9	36.6	15.3	35.4	14.8	33.0	13.7
	-7.0	-7.6	42.6	17.3	40.2	16.3	37.8	15.2	36.6	14.7	35.4	14.2	33.0	13.1
	-5.0	-5.6	42.6	16.4	40.2	15.4	37.8	14.4	36.6	13.9	35.4	13.4	33.0	12.4
	-3.0	-3.7	42.6	15.6	40.2	14.6	37.8	13.7	36.6	13.2	35.4	12.8	33.0	11.9
	0.0	-0.7	42.6	14.5	40.2	13.6	37.8	12.7	36.6	12.3	35.4	11.9	33.0	11.1
	3.0	2.2	42.6	13.6	40.2	12.7	37.8	12.0	36.6	11.6	35.4	11.2	33.0	10.4
	5.0	4.1	42.6	13.0	40.2	12.2	37.8	11.5	36.6	11.1	35.4	10.7	33.0	10.0
	7.0	6.0	42.6	12.5	40.2	11.8	37.8	11.1	36.6	10.7	35.4	10.4	33.0	9.7
	9.0	7.9	42.6	12.1	40.2	11.4	37.8	10.7	36.6	10.3	35.4	10.0	33.0	9.3
	11.0	9.8	42.6	11.6	40.2	11.0	37.8	10.3	36.6	10.0	35.4	9.7	33.0	9.0
	13.0	11.8	42.6	11.2	40.2	10.6	37.8	10.0	36.6	9.6	35.4	9.4	33.0	8.7
	15.0	13.7	42.6	10.9	40.2	10.3	37.8	9.6	36.6	9.4	35.4	9.1	33.0	8.5
	19.0	14.2	42.6	10.6	40.2	9.8	37.8	9.4	36.6	9.1	35.4	8.7	33.0	8.1
	21.0	15.0	42.6	10.1	40.2	9.5	37.8	9.0	36.6	8.8	35.4	8.4	33.0	7.8
50	-14.7	-15.0	35.6	18.0	33.6	16.9	31.6	15.8	30.4	15.2	29.4	14.6	27.4	13.6
	-12.6	-13.0	35.6	16.9	33.6	15.8	31.6	14.7	30.4	14.2	29.4	13.7	27.4	12.7
	-10.5	-11.0	35.6	15.8	33.6	14.8	31.6	13.8	30.4	13.3	29.4	12.9	27.4	12.0
	-9.5	-10.0	35.6	15.3	33.6	14.3	31.6	13.4	30.4	13.0	29.4	12.5	27.4	11.6
	-8.5	-9.1	35.6	14.9	33.6	14.0	31.6	13.1	30.4	12.6	29.4	12.2	27.4	11.3
	-7.0	-7.6	35.6	14.2	33.6	13.4	31.6	12.5	30.4	12.1	29.4	11.7	27.4	10.9
	-5.0	-5.6	35.6	13.5	33.6	12.7	31.6	11.9	30.4	11.5	29.4	11.1	27.4	10.4
	-3.0	-3.7	35.6	12.9	33.6	12.1	31.6	11.3	30.4	11.0	29.4	10.6	27.4	9.9
	0.0	-0.7	35.6	12.0	33.6	11.3	31.6	10.6	30.4	10.3	29.4	9.9	27.4	9.3
	3.0	2.2	35.6	11.2	33.6	10.6	31.6	10.0	30.4	9.7	29.4	9.4	27.4	8.7
	5.0	4.1	35.6	10.8	33.6	10.2	31.6	9.6	30.4	9.3	29.4	8.8	27.4	8.4
	7.0	6.0	35.6	10.4	33.6	9.8	31.6	9.3	30.4	9.0	29.4	8.7	27.4	8.2
	9.0	7.9	35.6	10.0	33.6	9.5	31.6	8.9	30.4	8.7	29.4	8.4	27.4	7.9
	11.0	9.8	35.6	9.7	33.6	9.2	31.6	8.7	30.4	8.4	29.4	8.2	27.4	7.6
	13.0	11.8	35.6	9.4	33.6	8.9	31.6	8.4	30.4	8.1	29.4	7.9	27.4	7.4
	15.0	13.7	35.6	9.1	33.6	8.6	31.6	8.1	30.4	7.9	29.4	7.7	27.4	7.2
	19.0	14.2	35.6	8.8	33.6	8.3	31.6	7.9	30.4	7.6	29.4	7.4	27.4	6.9
	21.0	15.0	35.6	8.2	33.6	8.1	31.6	7.7	30.4	7.2	29.4	7.1	27.4	6.6

8) 22HP capacity

heating

capacity factor(%)	outdoor temp.		indoor temp.℃WB											
			16.0		18.0		20.0		21.0		22.0		24.0	
			TC	PI	TC	PI	TC	PI	TC	PI	TC	PI	TC	PI
	℃DB	℃WB	KW	KW	KW	KW	KW	KW	KW	KW	KW	KW	KW	KW
130	-14.7	-15.0	43.7	13.3	43.7	14.0	43.7	14.8	43.6	15.1	43.6	15.5	43.6	16.3
	-12.6	-13.0	45.9	14.0	45.9	14.7	45.9	15.4	45.9	15.7	45.9	16.1	45.9	16.8
	-10.5	-11.0	48.2	14.7	48.2	15.3	48.2	16.0	48.2	16.3	48.2	16.6	48.2	17.2
	-9.5	-10.0	49.9	15.0	49.9	15.6	49.9	16.2	49.9	16.6	49.9	16.9	49.9	17.5
	-8.5	-9.1	51.5	15.2	51.5	15.8	51.5	16.4	51.5	16.8	51.5	17.1	51.5	17.7
	-7.0	-7.6	53.7	15.6	53.7	16.2	53.7	16.8	53.7	17.1	53.7	17.4	53.7	18.0
	-5.0	-5.6	56.0	16.1	56.0	16.7	56.0	17.2	56.0	17.5	56.0	17.8	56.0	18.3
	-3.0	-3.7	58.2	16.5	58.2	17.0	58.2	17.6	58.2	17.9	58.2	18.1	58.2	18.8
	0.0	-0.7	61.4	17.1	61.4	17.6	61.4	18.1	61.4	18.4	61.4	18.6	61.4	19.1
	3.0	2.2	64.1	17.6	64.1	18.1	64.1	18.5	64.1	18.8	64.1	19.0	64.1	19.6
	5.0	4.1	66.7	17.9	66.7	18.4	66.7	18.8	66.7	19.0	66.7	19.4	66.7	19.7
	7.0	6.0	69.0	18.2	69.0	18.7	69.0	19.0	69.0	19.3	69.0	19.6	69.0	20.0
	9.0	7.9	71.5	18.4	71.4	18.8	71.4	19.3	71.4	19.6	71.4	19.7	71.4	20.2
	11.0	9.8	74.1	18.7	74.1	19.0	74.1	19.6	74.1	19.7	74.1	20.0	74.1	20.3
	13.0	11.8	75.8	18.8	75.8	19.3	75.8	19.7	75.8	20.0	75.8	20.2	75.8	20.5
	15.0	13.7	78.0	19.1	78.0	19.5	78.0	19.9	78.0	20.2	78.0	20.3	78.0	20.5
	19.0	14.2	78.0	19.4	78.0	19.8	78.0	20.1	78.0	20.3	78.0	20.5	78.0	20.1
	21.0	15.0	78.0	19.7	78.0	20.0	78.0	20.3	78.0	20.5	78.0	20.5	78.0	19.5
120	-14.7	-15.0	43.7	14.3	43.6	15.0	43.6	15.7	43.6	16.0	43.6	16.3	43.6	17.0
	-12.6	-13.0	45.9	14.9	45.9	15.6	45.9	16.3	45.9	16.6	45.9	16.9	45.9	17.6
	-10.5	-11.0	48.2	15.5	48.2	16.1	48.2	16.8	48.2	17.1	48.2	17.4	48.2	18.0
	-9.5	-10.0	49.9	15.8	49.9	16.4	49.9	17.0	49.9	17.2	49.9	17.6	49.9	18.2
	-8.5	-9.1	51.5	16.0	51.5	16.6	51.5	17.2	51.5	17.5	51.5	17.8	51.5	18.3
	-7.0	-7.6	53.7	16.4	53.7	17.0	53.7	17.5	53.7	17.8	53.7	18.0	53.7	18.7
	-5.0	-5.6	56.0	16.8	56.0	17.4	56.0	17.9	56.0	18.2	56.0	18.5	56.0	18.9
	-3.0	-3.7	58.2	17.3	58.2	17.8	58.2	18.3	58.2	18.5	58.2	18.8	58.2	19.3
	0.0	-0.7	61.4	17.8	61.4	18.3	61.4	18.8	61.4	18.9	61.4	19.2	61.4	19.1
	3.0	2.2	64.1	18.2	64.1	18.7	64.1	19.2	64.1	19.4	64.1	19.6	64.1	20.1
	5.0	4.1	66.7	18.5	66.7	18.9	66.7	19.4	66.7	19.6	66.7	19.8	66.7	20.3
	7.0	6.0	69.0	18.8	69.0	19.2	69.0	19.6	69.0	19.8	69.0	20.0	69.0	20.5
	9.0	7.9	71.4	19.0	71.4	19.4	71.4	19.8	71.4	20.0	71.4	20.2	71.7	20.7
	11.0	9.8	74.1	19.2	74.1	19.6	74.1	20.0	74.1	20.2	74.1	20.3	72.1	20.2
	13.0	11.8	75.8	19.5	75.8	19.8	75.8	20.2	75.8	20.3	75.8	20.6	72.1	19.5
	15.0	13.7	78.0	19.6	78.0	20.0	78.0	20.3	78.0	20.5	77.8	20.4	72.1	18.7
	19.0	14.2	78.0	20.0	78.0	20.4	78.0	20.6	78.0	20.3	77.8	19.9	72.1	18.4
	21.0	15.0	78.0	20.3	78.0	20.2	78.0	20.2	78.0	20.0	77.8	19.2	72.1	18.1
110	-14.7	-15.0	43.6	15.3	43.6	15.9	43.6	16.5	43.6	16.8	43.6	17.2	43.6	17.8
	-12.6	-13.0	45.9	15.9	45.9	16.5	45.9	17.1	45.9	17.4	45.9	17.7	45.9	18.3
	-10.5	-11.0	48.2	16.4	48.2	16.9	48.2	17.6	48.2	17.9	48.2	18.1	48.2	18.7
	-9.5	-10.0	49.9	16.7	49.9	17.2	49.9	17.7	49.9	18.0	49.9	18.3	49.9	18.9
	-8.5	-9.1	51.5	16.9	51.5	17.4	51.5	18.0	51.5	18.2	51.5	18.5	51.5	19.0
	-7.0	-7.6	53.7	17.2	53.7	17.7	53.7	18.2	53.7	18.5	53.7	18.8	53.7	19.3
	-5.0	-5.6	56.0	17.6	56.0	18.1	56.0	18.6	56.0	18.9	56.0	19.1	56.0	19.6
	-3.0	-3.7	58.2	18.0	58.2	18.5	58.2	18.9	58.2	19.1	58.2	19.5	58.2	19.8
	0.0	-0.7	61.4	18.5	61.3	18.9	61.3	19.4	61.3	19.6	61.3	19.7	61.3	20.3
	3.0	2.2	64.1	18.9	64.1	19.4	64.1	19.7	64.1	19.9	64.1	20.2	64.1	20.5
	5.0	4.1	66.7	19.2	66.7	19.6	66.7	19.9	66.7	20.2	66.7	20.3	66.2	20.5
	7.0	6.0	69.0	19.4	69.0	19.7	69.0	20.2	69.0	20.3	69.0	20.5	66.2	19.6
	9.0	7.9	71.4	19.6	71.4	20.0	71.4	20.3	71.4	20.5	70.9	20.3	66.2	18.9
	11.0	9.8	74.1	19.8	74.1	20.2	74.1	20.5	73.4	20.6	70.9	19.8	66.2	18.3

heating

capacity factor(%)	outdoor temp.		indoor temp.℃WB											
			16.0		18.0		20.0		21.0		22.0		24.0	
			TC	PI	TC	PI	TC	PI	TC	PI	TC	PI	TC	PI
	℃DB	℃WB	KW	KW	KW	KW	KW	KW	KW	KW	KW	KW	KW	KW
110	13.0	11.8	75.8	20.0	75.8	20.3	75.8	20.5	73.4	19.8	70.9	19.0	66.2	17.6
	15.0	13.7	78.0	20.2	78.0	20.5	76.0	19.8	73.4	19.1	70.9	18.4	66.2	17.0
	19.0	14.2	78.0	19.8	78.0	20.2	76.0	19.1	73.4	18.3	70.9	17.6	66.2	16.5
	21.0	15.0	78.0	19.6	78.0	19.7	76.0	18.4	73.4	17.7	70.9	17.2	66.2	16.3
100	-14.7	-15.0	43.6	16.3	43.6	16.9	43.6	17.4	43.6	17.7	43.6	18.0	43.6	18.5
	-12.6	-13.0	45.9	16.8	45.9	17.4	45.9	17.9	45.9	18.1	45.9	18.4	45.9	19.0
	-10.5	-11.0	48.2	17.4	48.2	17.9	48.2	18.3	48.2	18.6	48.2	18.9	48.2	19.3
	-9.5	-10.0	49.9	17.6	49.9	18.0	49.9	18.5	49.9	18.8	49.9	19.0	49.9	19.5
	-8.5	-9.1	51.5	17.7	51.5	18.2	51.5	18.7	51.5	18.9	51.5	19.2	51.5	19.7
	-7.0	-7.6	53.7	18.0	53.7	18.5	53.7	18.9	53.7	19.2	53.7	19.5	53.7	19.9
	-5.0	-5.6	56.0	18.4	56.0	18.9	56.0	19.3	56.0	19.5	56.0	19.7	56.0	20.2
	-3.0	-3.7	58.2	18.8	58.2	19.1	58.2	19.6	58.2	19.7	58.2	20.0	58.2	20.4
	0.0	-0.7	61.3	19.2	61.3	19.6	61.3	19.9	61.3	20.2	61.3	20.3	60.1	20.5
	3.0	2.2	64.1	19.6	64.1	19.9	64.1	20.3	64.1	20.5	64.1	20.7	60.1	19.3
	5.0	4.1	66.7	19.7	66.7	20.2	66.7	20.5	66.7	20.7	64.6	20.0	60.1	18.4
	7.0	6.0	69.0	20.0	69.0	20.3	69.0	20.7	66.7	19.9	64.6	19.2	60.1	17.7
	9.0	7.9	71.4	20.2	71.2	20.5	69.0	19.9	66.7	19.2	64.6	18.4	60.1	17.0
	11.0	9.8	74.1	20.3	73.3	20.6	69.0	19.1	66.7	18.5	64.6	17.8	60.1	17.4
	13.0	11.8	75.8	20.5	73.3	19.7	69.0	18.5	66.7	17.8	64.6	17.1	60.1	15.9
	15.0	13.7	77.8	20.4	73.3	19.1	69.0	17.8	66.7	17.1	64.6	16.6	60.1	15.3
	19.0	14.2	77.8	19.7	73.3	18.5	69.0	17.4	66.7	16.4	64.6	15.8	60.1	14.7
	21.0	15.0	77.8	19.2	73.3	17.8	69.0	16.7	66.7	16.0	64.6	15.1	60.1	14.2
90	-14.7	-15.0	43.6	17.3	43.6	17.8	43.6	18.3	43.6	18.6	43.6	18.8	43.6	19.2
	-12.6	-13.0	45.9	17.8	45.9	18.3	45.9	18.7	45.9	19.0	45.9	19.1	45.9	19.7
	-10.5	-11.0	48.2	18.2	48.2	18.7	48.2	19.1	48.2	19.4	48.2	19.5	48.2	19.9
	-9.5	-10.0	49.9	18.4	49.9	18.9	49.9	19.4	49.9	19.6	49.9	19.7	49.9	20.2
	-8.5	-9.1	51.5	18.5	51.5	19.0	51.5	19.6	51.5	19.8	51.5	19.8	51.5	20.4
	-7.0	-7.6	53.7	18.9	53.7	19.3	53.7	19.8	53.7	20.0	53.7	20.2	53.6	20.5
	-5.0	-5.6	56.0	19.1	56.0	19.6	56.0	20.0	56.0	20.2	56.0	20.4	54.0	20.4
	-3.0	-3.7	58.2	19.5	58.2	19.9	58.2	20.3	58.2	20.4	58.2	20.6	54.0	19.7
	0.0	-0.7	61.3	19.9	61.3	20.3	61.3	20.6	59.9	20.4	58.0	19.8	54.0	18.0
	3.0	2.2	64.1	20.3	65.1	20.5	62.0	19.9	59.9	19.3	58.0	18.4	54.0	17.1
	5.0	4.1	66.7	20.4	66.1	20.5	62.0	19.1	59.9	18.4	58.0	17.7	54.0	16.4
	7.0	6.0	69.0	20.6	66.1	19.7	62.0	18.4	59.9	17.7	58.0	17.0	54.0	15.8
	9.0	7.9	70.0	20.3	66.1	18.9	62.0	17.7	59.9	17.0	58.0	16.4	54.0	15.2
	11.0	9.8	70.0	19.5	66.1	18.2	62.0	17.0	59.9	16.4	58.0	15.8	54.0	14.7
	13.0	11.8	70.0	18.8	66.1	17.6	62.0	16.4	59.9	15.9	58.0	15.3	54.0	14.2
	15.0	13.7	70.0	18.1	66.1	17.0	62.0	15.9	59.9	15.3	58.0	14.8	54.0	13.7
	19.0	14.2	70.0	17.6	66.1	16.5	62.0	15.4	59.9	14.8	58.0	14.2	54.0	13.1
	21.0	15.0	70.0	16.9	66.1	15.7	62.0	15.0	59.9	14.2	58.0	13.5	54.0	12.6
80	-14.7	-15.0	43.6	18.3	43.6	18.8	43.6	19.2	43.6	19.4	43.6	19.6	43.6	20.0
	-12.6	-13.0	45.9	18.7	45.9	19.1	45.9	19.6	45.9	19.8	45.9	20.0	45.9	20.4
	-10.5	-11.0	48.2	19.0	48.2	19.5	48.2	19.8	48.2	20.1	48.2	20.4	48.1	20.5
	-9.5	-10.0	49.9	19.3	49.9	19.7	49.9	20.0	49.9	20.3	49.9	20.4	48.1	20.3
	-8.5	-9.1	51.5	19.5	51.5	19.8	51.5	20.2	51.5	20.4	51.5	20.6	48.1	19.7
	-7.0	-7.6	53.7	19.7	53.7	20.0	53.6	20.4	53.6	20.6	51.6	20.4	48.1	19.0
	-5.0	-5.6	56.0	20.0	56.0	20.3	56.0	20.6	53.3	20.3	51.6	19.5	48.1	18.0
	-3.0	-3.7	58.2	20.3	58.2	20.6	55.2	20.0	53.3	19.3	51.6	18.6	48.1	17.2
	0.0	-0.7	61.3	20.6	58.6	19.9	55.2	18.7	53.3	18.0	51.6	17.3	48.1	16.0
	3.0	2.2	62.1	20.0	58.6	18.7	55.2	17.5	53.3	16.8	51.6	16.2	48.1	15.0
	5.0	4.1	62.1	19.2	58.6	18.0	55.2	16.8	53.3	16.2	51.6	15.6	48.1	14.5
	7.0	6.0	62.1	18.4	58.6	17.2	55.2	16.1	53.3	15.6	51.6	15.0	48.1	13.9
	9.0	7.9	62.1	17.7	58.6	16.6	55.2	15.5	53.3	15.0	51.6	14.5	48.1	13.4
	11.0	9.8	62.1	17.1	58.6	16.0	55.2	15.0	53.3	14.5	51.6	14.0	48.1	13.0
	13.0	11.8	62.1	16.5	58.6	15.5	55.2	14.5	53.3	14.0	51.6	13.5	48.1	12.5
	15.0	13.7	62.1	15.9	58.6	14.9	55.2	14.0	53.3	13.5	51.6	13.1	48.1	12.1
	19.0	14.2	62.1	15.4	58.6	14.5	55.2	13.5	53.3	13.0	51.6	12.5	48.1	11.7
	21.0	15.0	62.1	14.9	58.6	14.0	55.2	13.0	53.3	12.5	51.6	12.0	48.1	11.2

heating

capacity factor(%)	outdoor temp.		indoor temp.℃WB											
			16.0		18.0		20.0		21.0		22.0		24.0	
			TC	PI	TC	PI	TC	PI	TC	PI	TC	PI	TC	PI
	℃DB	℃WB	KW	KW	KW	KW	KW	KW	KW	KW	KW	KW	KW	KW
70	-14.7	-15.0	43.6	19.2	43.6	19.7	43.6	20.1	43.6	20.3	43.6	20.5	42.1	20.3
	-12.6	-13.0	45.9	19.7	45.9	20.0	45.9	20.4	45.9	20.5	45.1	20.4	42.1	19.3
	-10.5	-11.0	48.2	19.9	48.2	20.4	48.3	20.5	46.6	20.1	45.1	19.6	42.1	18.1
	-9.5	-10.0	49.9	20.1	49.9	20.4	48.3	20.3	46.6	19.7	45.1	19.0	42.1	17.5
	-8.5	-9.1	51.5	20.3	51.5	20.6	48.3	19.8	46.6	19.1	45.1	18.5	42.1	17.1
	-7.0	-7.6	53.6	20.4	51.4	20.3	48.3	19.2	46.6	18.4	45.1	17.7	42.1	16.4
	-5.0	-5.6	54.5	20.6	51.4	19.4	48.3	18.1	46.6	17.5	45.1	16.8	42.1	15.6
	-3.0	-3.7	54.5	19.8	51.4	18.5	48.3	17.3	46.6	16.7	45.1	16.0	42.1	14.9
	0.0	-0.7	54.5	18.4	51.4	17.2	48.3	16.1	46.6	15.5	45.1	15.0	42.1	13.9
	3.0	2.2	54.5	17.3	51.4	16.2	48.3	15.1	46.6	14.6	45.1	14.0	42.1	13.1
	5.0	4.1	54.5	16.5	51.4	15.5	48.3	14.5	46.6	14.0	45.1	13.5	42.1	12.6
	7.0	6.0	54.5	15.9	51.4	14.9	48.3	14.0	46.6	13.5	45.1	13.0	42.1	12.1
	9.0	7.9	54.5	15.3	51.4	14.4	48.3	13.5	46.6	13.0	45.1	12.6	42.1	11.7
	11.0	9.8	54.5	14.8	51.4	13.9	48.3	13.0	46.6	12.6	45.1	12.1	42.1	11.3
	13.0	11.8	54.5	14.3	51.4	13.4	48.3	12.6	46.6	12.2	45.1	11.8	42.1	11.0
	15.0	13.7	54.5	13.8	51.4	13.0	48.3	12.2	46.6	11.8	45.1	11.4	42.1	10.7
	19.0	14.2	54.5	13.3	51.4	12.5	48.3	11.8	46.6	11.4	45.1	10.8	42.1	10.3
	21.0	15.0	54.5	12.7	51.4	11.8	48.3	11.2	46.6	10.7	45.1	10.3	42.1	9.7
60	-14.7	-15.0	43.6	20.3	43.6	20.5	41.3	20.1	40.1	19.3	38.7	18.7	36.0	17.2
	-12.6	-13.0	45.9	20.5	44.0	20.1	41.3	18.8	40.1	18.1	38.7	17.5	36.0	16.2
	-10.5	-11.0	46.6	20.1	44.0	19.1	41.3	17.7	40.1	17.1	38.7	16.5	36.0	15.2
	-9.5	-10.0	46.6	19.7	44.0	18.4	41.3	17.2	40.1	16.6	38.7	16.0	36.0	14.8
	-8.5	-9.1	46.6	19.1	44.0	18.0	41.3	16.8	40.1	16.2	38.7	15.6	36.0	14.5
	-7.0	-7.6	46.6	18.4	44.0	17.2	41.3	16.1	40.1	15.5	38.7	15.1	36.0	13.9
	-5.0	-5.6	46.6	17.5	44.0	16.4	41.3	15.3	40.1	14.8	38.7	14.2	36.0	13.2
	-3.0	-3.7	46.6	16.7	44.0	15.6	41.3	14.6	40.1	14.1	38.7	13.6	36.0	12.7
	0.0	-0.7	46.6	15.5	44.0	14.6	41.3	13.7	40.1	13.2	38.7	12.7	36.0	11.8
	3.0	2.2	46.6	14.5	44.0	13.7	41.3	12.9	40.1	12.4	38.7	12.0	36.0	11.2
	5.0	4.1	46.6	14.0	44.0	13.2	41.3	12.3	40.1	12.0	38.7	11.6	36.0	10.8
	7.0	6.0	46.6	13.5	44.0	12.7	41.3	11.9	40.1	11.6	38.7	11.2	36.0	10.4
	9.0	7.9	46.6	13.0	44.0	12.3	41.3	11.5	40.1	11.2	38.7	10.8	36.0	10.1
	11.0	9.8	46.6	12.6	44.0	11.8	41.3	11.2	40.1	10.8	38.7	10.5	36.0	9.8
	13.0	11.8	46.6	12.2	44.0	11.5	41.3	10.8	40.1	10.5	38.7	10.1	36.0	9.5
	15.0	13.7	46.6	11.8	44.0	11.1	41.3	10.5	40.1	10.1	38.7	9.8	36.0	9.2
	19.0	14.2	46.6	11.4	44.0	10.7	41.3	10.0	40.1	9.7	38.7	9.4	36.0	8.8
	21.0	15.0	46.6	10.9	44.0	10.3	41.3	9.6	40.1	9.4	38.7	9.1	36.0	8.4
50	-14.7	-15.0	38.9	18.7	36.7	17.5	34.5	16.4	33.3	15.8	32.2	15.3	30.0	14.1
	-12.6	-13.0	38.9	17.6	36.7	16.5	34.5	15.4	33.3	14.9	32.2	14.4	30.0	13.4
	-10.5	-11.0	38.9	16.6	36.7	15.5	34.5	14.5	33.3	14.0	32.2	13.5	30.0	12.6
	-9.5	-10.0	38.9	16.1	36.7	15.1	34.5	14.2	33.3	13.7	32.2	13.2	30.0	12.3
	-8.5	-9.1	38.9	15.7	36.7	14.7	34.5	13.8	33.3	13.3	32.2	12.9	30.0	12.0
	-7.0	-7.6	38.9	15.1	36.7	14.1	34.5	13.3	33.3	12.8	32.2	12.4	30.0	11.6
	-5.0	-5.6	38.9	14.3	36.7	13.5	34.5	12.6	33.3	12.2	32.2	11.8	30.0	11.0
	-3.0	-3.7	38.9	13.7	36.7	12.9	34.5	12.1	33.3	11.7	32.2	11.3	30.0	10.6
	0.0	-0.7	38.9	12.8	36.7	12.1	34.5	11.3	33.3	11.0	32.2	10.6	30.0	9.9
	3.0	2.2	38.9	12.1	36.7	11.4	34.5	10.7	33.3	10.4	32.2	10.0	30.0	9.4
	5.0	4.1	38.9	11.6	36.7	11.0	34.5	10.4	33.3	10.0	32.2	9.6	30.0	9.1
	7.0	6.0	38.9	11.2	36.7	10.6	34.5	10.0	33.3	9.7	32.2	9.4	30.0	8.8
	9.0	7.9	38.9	10.8	36.7	10.2	34.5	9.7	33.3	9.4	32.2	9.1	30.0	8.5
	11.0	9.8	38.9	10.5	36.7	9.9	34.5	9.4	33.3	9.1	32.2	8.8	30.0	8.3
	13.0	11.8	38.9	10.2	36.7	9.6	34.5	9.1	33.3	8.8	32.2	8.5	30.0	8.0
	15.0	13.7	38.9	9.9	36.7	9.4	34.5	8.8	33.3	8.6	32.2	8.3	30.0	7.8
	19.0	14.2	38.9	9.5	36.7	9.0	34.5	8.4	33.3	8.2	32.2	8.0	30.0	7.5
	21.0	15.0	38.9	9.1	36.7	8.5	34.5	8.1	33.3	7.9	32.2	7.7	30.0	7.2

9) 24HP capacity

heating

capacity factor(%)	outdoor temp.		indoor temp.℃WB											
			16.0		18.0		20.0		21.0		22.0		24.0	
			TC	PI	TC	PI	TC	PI	TC	PI	TC	PI	TC	PI
	℃DB	℃WB	KW	KW	KW	KW	KW	KW	KW	KW	KW	KW	KW	KW
130	-14.7	-15.0	46.9	14.7	46.9	15.5	46.9	16.4	46.8	16.8	46.8	17.3	46.8	18.2
	-12.6	-13.0	49.5	15.6	49.5	16.4	49.5	17.2	49.5	17.6	49.5	18.0	49.5	18.8
	-10.5	-11.0	52.4	16.4	52.4	17.2	52.4	17.9	52.4	18.3	52.4	18.7	52.4	19.4
	-9.5	-10.0	54.0	16.8	54.0	17.5	54.0	18.3	54.0	18.6	54.0	19.0	54.0	19.8
	-8.5	-9.1	55.2	17.1	55.2	17.8	55.2	18.5	55.2	18.9	55.2	19.2	55.2	20.0
	-7.0	-7.6	57.4	17.6	57.4	18.3	57.4	19.0	57.4	19.4	57.4	19.6	57.4	20.4
	-5.0	-5.6	60.2	18.2	60.2	18.8	60.2	19.4	60.2	19.8	60.2	20.2	60.2	20.7
	-3.0	-3.7	62.8	18.7	62.8	19.2	62.8	20.0	62.8	20.4	62.8	20.6	62.8	21.3
	0.0	-0.7	67.1	19.4	67.1	20.0	67.1	20.6	67.1	20.9	67.1	21.1	67.1	21.7
	3.0	2.2	71.0	20.0	71.0	20.6	71.0	21.1	71.0	21.3	71.0	21.7	71.0	22.3
	5.0	4.1	73.8	20.4	73.8	20.9	73.8	21.5	73.8	21.7	73.8	22.1	73.8	22.5
	7.0	6.0	76.5	20.7	76.5	21.3	76.5	21.7	76.5	22.1	76.5	22.3	76.5	22.8
	9.0	7.9	79.2	20.9	79.1	21.5	79.1	22.1	79.1	22.3	79.1	22.5	79.1	23.0
	11.0	9.8	81.8	21.3	81.8	21.7	81.8	22.3	81.8	22.5	81.8	22.8	81.8	23.2
	13.0	11.8	83.7	21.5	83.7	22.1	83.7	22.5	83.7	22.8	83.7	23.0	83.7	23.4
	15.0	13.7	87.3	21.9	87.3	22.3	87.3	22.6	87.3	23.0	87.3	23.2	86.7	23.2
	19.0	14.2	87.3	22.1	87.3	22.5	87.3	22.9	87.3	23.2	87.3	23.4	86.7	22.8
	21.0	15.0	87.3	22.3	87.3	22.7	87.3	23.1	87.3	23.4	87.3	23.1	86.7	22.5
120	-14.7	-15.0	46.9	15.9	46.8	16.7	46.8	17.5	46.8	17.9	46.8	18.3	46.8	19.0
	-12.6	-13.0	49.5	16.7	49.5	17.4	49.5	18.2	49.5	18.6	49.5	19.0	49.5	19.8
	-10.5	-11.0	52.4	17.4	52.4	18.1	52.4	18.8	52.4	19.2	52.4	19.6	52.4	20.4
	-9.5	-10.0	54.0	17.8	54.0	18.5	54.0	19.2	54.0	19.4	54.0	19.8	54.0	20.6
	-8.5	-9.1	55.2	18.1	55.2	18.7	55.2	19.4	55.2	19.8	55.2	20.2	55.2	20.7
	-7.0	-7.6	57.4	18.5	57.4	19.2	57.4	19.8	57.4	20.2	57.4	20.4	57.4	21.1
	-5.0	-5.6	60.2	19.0	60.2	19.6	60.2	20.4	60.2	20.6	60.2	20.9	60.2	21.5
	-3.0	-3.7	62.8	19.6	62.8	20.2	62.8	20.7	62.8	20.9	62.8	21.3	62.8	21.9
	0.0	-0.7	67.1	20.2	67.1	20.7	67.1	21.3	67.1	21.5	67.1	21.9	67.1	22.5
	3.0	2.2	71.0	20.7	71.0	21.3	71.0	21.9	71.0	22.1	71.0	22.3	71.0	22.8
	5.0	4.1	73.8	21.1	73.8	21.5	73.8	22.1	73.8	22.3	73.8	22.6	73.8	23.0
	7.0	6.0	76.5	21.3	76.5	21.9	76.5	22.5	76.5	22.6	76.5	22.8	76.5	23.4
	9.0	7.9	79.1	21.7	79.1	22.1	79.1	22.6	79.1	22.8	79.1	23.0	79.1	23.6
	11.0	9.8	81.8	21.9	81.8	22.5	81.8	22.8	81.8	23.0	81.8	23.2	80.0	22.8
	13.0	11.8	83.7	22.3	83.7	22.6	83.7	23.0	83.7	23.2	83.7	23.6	80.0	22.1
	15.0	13.7	87.3	22.5	87.3	22.8	87.3	23.2	87.3	23.4	86.2	23.0	80.0	21.1
	19.0	14.2	87.3	22.6	87.3	23.0	87.3	23.2	87.3	23.2	86.2	22.6	80.0	20.6
	21.0	15.0	87.3	22.9	87.3	23.2	87.3	23.4	87.3	23.0	86.2	21.9	80.0	20.2
110	-14.7	-15.0	46.8	17.0	46.8	17.8	46.8	18.5	46.8	18.8	46.8	19.2	46.8	20.0
	-12.6	-13.0	49.5	17.8	49.5	18.5	49.5	19.2	49.5	19.6	49.5	19.8	49.5	20.6
	-10.5	-11.0	52.4	18.5	52.4	19.0	52.4	19.8	52.4	20.2	52.4	20.4	52.4	21.1
	-9.5	-10.0	54.0	18.8	54.0	19.4	54.0	20.0	54.0	20.4	54.0	20.7	54.0	21.3
	-8.5	-9.1	55.2	19.0	55.2	19.6	55.2	20.4	55.2	20.6	55.2	20.9	55.2	21.5
	-7.0	-7.6	57.4	19.4	57.4	20.0	57.4	20.6	57.4	20.9	57.4	21.3	57.4	21.9
	-5.0	-5.6	60.2	20.0	60.2	20.6	60.2	21.1	60.2	21.3	60.2	21.7	60.2	22.3
	-3.0	-3.7	62.8	20.4	62.8	20.9	62.8	21.5	62.8	21.7	62.8	22.1	62.8	22.5
	0.0	-0.7	67.1	20.9	67.0	21.5	67.0	22.1	67.0	22.3	67.0	22.5	67.0	23.0
	3.0	2.2	71.0	21.5	71.0	22.1	71.0	22.5	71.0	22.6	71.0	23.0	71.0	23.4
	5.0	4.1	73.8	21.9	73.8	22.3	73.8	22.6	73.8	23.0	73.8	23.2	73.4	23.4
	7.0	6.0	76.5	22.1	76.5	22.5	76.5	23.0	76.5	23.2	76.5	23.4	73.4	22.5
	9.0	7.9	79.1	22.5	79.1	22.8	79.1	23.2	79.1	23.4	78.6	23.4	73.4	21.5
	11.0	9.8	81.8	22.6	81.8	23.0	81.8	23.4	81.4	23.4	78.6	22.5	73.4	20.7

heating

capacity factor(%)	outdoor temp.		indoor temp.℃WB											
			16.0		18.0		20.0		21.0		22.0		24.0	
			TC	PI	TC	PI	TC	PI	TC	PI	TC	PI	TC	PI
	℃DB	℃WB	KW	KW	KW	KW	KW	KW	KW	KW	KW	KW	KW	KW
110	13.0	11.8	83.7	22.8	83.7	23.2	84.3	23.2	81.4	22.5	78.6	21.5	73.4	20.0
	15.0	13.7	87.3	23.0	87.3	23.4	84.3	22.5	81.4	21.7	78.6	20.7	73.4	19.2
	19.0	14.2	87.3	21.5	87.3	23.2	84.3	21.7	81.4	20.8	78.6	20.0	73.4	18.6
	21.0	15.0	87.3	21.7	87.3	22.5	84.3	20.6	81.4	20.2	78.6	19.5	73.4	18.3
100	-14.7	-15.0	46.8	18.2	46.8	18.9	46.8	19.6	46.8	19.8	46.8	20.2	46.8	20.9
	-12.6	-13.0	49.5	18.9	49.5	19.6	49.5	20.2	49.5	20.4	49.5	20.7	49.5	21.3
	-10.5	-11.0	52.4	19.6	52.4	20.2	52.4	20.7	52.4	20.9	52.4	21.3	52.4	21.9
	-9.5	-10.0	54.0	19.8	54.0	20.4	54.0	20.9	54.0	21.3	54.0	21.5	54.0	22.1
	-8.5	-9.1	55.2	20.0	55.2	20.6	55.2	21.1	55.2	21.5	55.2	21.7	55.2	22.3
	-7.0	-7.6	57.4	20.4	57.4	20.9	57.4	21.5	57.4	21.7	57.4	22.1	57.4	22.6
	-5.0	-5.6	60.2	20.9	60.2	21.3	60.2	21.9	60.2	22.1	60.2	22.5	60.2	22.8
	-3.0	-3.7	62.8	21.3	62.8	21.7	62.8	22.3	62.8	22.5	62.8	22.6	62.8	23.2
	0.0	-0.7	67.0	21.9	67.0	22.3	67.0	22.6	67.0	23.0	67.0	23.2	66.8	23.6
	3.0	2.2	71.0	22.3	71.0	22.6	71.0	23.2	71.0	23.4	71.0	23.6	66.8	22.1
	5.0	4.1	73.8	22.5	73.8	23.0	73.8	23.4	73.8	23.6	71.6	22.8	66.8	21.1
	7.0	6.0	76.5	22.8	76.5	23.2	76.5	23.6	74.1	22.6	71.6	21.9	66.8	20.2
	9.0	7.9	79.1	23.0	79.1	23.4	76.5	22.6	74.1	21.9	71.6	20.9	66.8	19.4
	11.0	9.8	81.8	23.2	81.4	23.4	76.5	21.7	74.1	20.9	71.6	20.2	66.8	18.7
	13.0	11.8	83.7	23.4	81.4	22.5	76.5	20.9	74.1	20.2	71.6	19.4	66.8	18.0
	15.0	13.7	86.2	23.0	81.4	21.7	76.5	20.2	74.1	19.4	71.6	18.7	66.8	17.3
	19.0	14.2	86.2	22.4	81.4	21.0	76.5	19.7	74.1	18.6	71.6	18.0	66.8	16.9
	21.0	15.0	86.2	21.7	81.4	20.0	76.5	18.9	74.1	18.3	71.6	17.5	66.8	16.5
90	-14.7	-15.0	46.8	19.4	46.8	20.0	46.8	20.6	46.8	20.9	46.8	21.1	46.8	21.7
	-12.6	-13.0	49.5	20.0	49.5	20.6	49.5	21.1	49.5	21.3	49.5	21.7	49.5	22.3
	-10.5	-11.0	52.4	20.6	52.4	21.1	52.4	21.7	52.4	21.9	52.4	22.1	52.4	22.6
	-9.5	-10.0	54.0	20.7	54.0	21.3	54.0	21.9	54.0	22.1	54.0	22.3	54.0	22.8
	-8.5	-9.1	55.2	20.9	55.2	21.5	55.2	22.1	55.2	22.3	55.2	22.5	55.2	23.0
	-7.0	-7.6	57.4	21.3	57.4	21.9	57.4	22.3	57.4	22.6	57.4	22.8	57.3	23.2
	-5.0	-5.6	60.2	21.7	60.2	22.3	60.2	22.6	60.2	22.8	60.2	23.2	59.6	23.6
	-3.0	-3.7	62.8	22.1	62.8	22.6	62.8	23.0	62.8	23.2	62.8	23.4	59.8	22.6
	0.0	-0.7	67.0	22.6	67.0	23.0	67.0	23.4	66.4	23.6	64.3	22.6	59.8	20.9
	3.0	2.2	71.0	23.0	71.0	23.4	68.9	22.8	66.4	22.1	64.3	21.1	59.8	19.6
	5.0	4.1	73.8	23.2	73.5	23.4	68.9	21.9	66.4	21.1	64.3	20.2	59.8	18.7
	7.0	6.0	76.5	23.4	73.5	22.5	68.9	20.9	66.4	20.2	64.3	19.4	59.8	18.0
	9.0	7.9	77.8	23.0	73.5	21.5	68.9	20.2	66.4	19.4	64.3	18.7	59.8	17.3
	11.0	9.8	77.8	22.1	73.5	20.7	68.9	19.4	66.4	18.7	64.3	18.0	59.8	16.7
	13.0	11.8	77.8	21.3	73.5	20.0	68.9	18.6	66.4	17.9	64.3	17.3	59.8	16.1
	15.0	13.7	77.8	20.6	73.5	19.2	68.9	17.9	66.4	17.3	64.3	16.7	59.8	15.5
	19.0	14.2	77.8	20.0	73.5	18.7	68.9	17.4	66.4	16.8	64.3	16.1	59.8	15.0
	21.0	15.0	77.8	19.3	73.5	18.0	68.9	17.1	66.4	16.3	64.3	15.6	59.8	14.3
80	-14.7	-15.0	46.8	20.6	46.8	21.1	46.8	21.7	46.8	21.9	46.8	22.1	46.8	22.6
	-12.6	-13.0	49.5	21.1	49.5	21.5	49.5	22.1	49.5	22.3	49.5	22.6	49.5	23.0
	-10.5	-11.0	52.4	21.5	52.4	22.1	52.4	22.5	52.4	22.8	52.4	23.0	52.2	23.4
	-9.5	-10.0	54.0	21.9	54.0	22.3	54.0	22.6	54.0	23.0	54.0	23.2	53.2	23.6
	-8.5	-9.1	55.2	22.1	55.2	22.5	55.2	22.8	55.2	23.2	55.2	23.4	53.3	23.2
	-7.0	-7.6	57.4	22.3	57.4	22.6	57.3	23.2	57.3	23.4	56.8	23.6	53.3	22.1
	-5.0	-5.6	60.2	22.6	60.2	23.0	60.2	23.4	59.1	23.6	57.3	22.6	53.3	20.9
	-3.0	-3.7	62.8	23.0	62.8	23.4	61.2	23.2	59.1	22.3	57.3	21.5	53.3	19.8
	0.0	-0.7	67.0	23.4	65.1	23.0	61.2	21.5	59.1	20.7	57.3	19.8	53.3	18.4
	3.0	2.2	69.0	22.8	65.1	21.5	61.2	20.0	59.1	19.2	57.3	18.6	53.3	17.2
	5.0	4.1	69.0	21.9	65.1	20.6	61.2	19.2	59.1	18.5	57.3	17.8	53.3	16.5
	7.0	6.0	69.0	20.9	65.1	19.6	61.2	18.4	59.1	17.7	57.3	17.1	53.3	15.9
	9.0	7.9	69.0	20.2	65.1	18.9	61.2	17.7	59.1	17.1	57.3	16.5	53.3	15.3
	11.0	9.8	69.0	19.4	65.1	18.2	61.2	17.0	59.1	16.4	57.3	15.9	53.3	14.7
	13.0	11.8	69.0	18.7	65.1	17.5	61.2	16.4	59.1	15.8	57.3	15.3	53.3	14.2
	15.0	13.7	69.0	18.0	65.1	16.7	61.2	15.8	59.1	15.3	57.3	14.8	53.3	13.8
	19.0	14.2	69.0	17.4	65.1	16.5	61.2	15.2	59.1	14.7	57.3	14.2	53.3	13.4
	21.0	15.0	69.0	16.9	65.1	15.7	61.2	14.8	59.1	14.3	57.3	13.7	53.3	12.7

heating

capacity factor(%)	outdoor temp.		indoor temp.℃WB											
			16.0		18.0		20.0		21.0		22.0		24.0	
			TC	PI	TC	PI	TC	PI	TC	PI	TC	PI	TC	PI
	℃DB	℃WB	KW	KW	KW	KW	KW	KW	KW	KW	KW	KW	KW	KW
70	-14.7	-15.0	46.8	21.7	46.8	22.3	46.8	22.6	46.8	22.8	46.8	23.0	46.0	23.6
	-12.6	-13.0	49.5	22.3	49.5	22.6	49.5	23.0	49.5	23.2	49.0	23.6	46.6	22.6
	-10.5	-11.0	52.4	22.6	52.4	23.0	52.3	23.4	51.5	23.6	50.1	22.8	46.6	21.1
	-9.5	-10.0	54.0	22.8	54.0	23.2	53.3	23.6	51.8	23.0	50.1	22.1	46.6	20.4
	-8.5	-9.1	55.2	23.0	55.2	23.4	53.7	23.2	51.8	22.5	50.1	21.5	46.6	20.0
	-7.0	-7.6	57.3	23.2	56.7	23.6	53.7	22.3	51.8	21.3	50.1	20.6	46.6	19.0
	-5.0	-5.6	59.9	23.6	57.0	22.5	53.7	20.9	51.8	20.2	50.1	19.4	46.6	18.0
	-3.0	-3.7	60.5	22.8	57.0	21.3	53.7	20.0	51.8	19.2	50.1	18.5	46.6	17.1
	0.0	-0.7	60.5	21.1	57.0	19.8	53.7	18.5	51.8	17.8	50.1	17.2	46.6	15.9
	3.0	2.2	60.5	19.8	57.0	18.5	53.7	17.3	51.8	16.7	50.1	16.1	46.6	14.9
	5.0	4.1	60.5	18.9	57.0	17.7	53.7	16.6	51.8	16.0	50.1	15.5	46.6	14.4
	7.0	6.0	60.5	18.1	57.0	17.0	53.7	15.9	51.8	15.4	50.1	14.9	46.6	13.8
	9.0	7.9	60.5	17.4	57.0	16.4	53.7	15.3	51.8	14.8	50.1	14.3	46.6	13.3
	11.0	9.8	60.5	16.8	57.0	15.8	53.7	14.8	51.8	14.3	50.1	13.7	46.6	12.9
	13.0	11.8	60.5	16.2	57.0	15.2	53.7	14.3	51.8	13.8	50.1	13.3	46.6	12.4
	15.0	13.7	60.5	15.6	57.0	14.7	53.7	13.8	51.8	13.4	50.1	12.9	46.6	12.1
	19.0	14.2	60.5	14.8	57.0	14.3	53.7	13.4	51.8	12.7	50.1	12.2	46.6	11.6
	21.0	15.0	60.5	14.3	57.0	13.6	53.7	12.8	51.8	12.2	50.1	11.6	46.6	10.9
60	-14.7	-15.0	46.8	22.8	46.8	23.2	45.7	23.6	44.4	22.8	43.0	22.1	40.0	20.4
	-12.6	-13.0	49.5	23.2	48.5	23.6	45.9	22.1	44.4	21.3	43.0	20.6	40.0	19.0
	-10.5	-11.0	51.5	23.6	48.8	22.3	45.9	20.7	44.4	20.0	43.0	19.2	40.0	17.8
	-9.5	-10.0	51.8	23.0	48.8	21.5	45.9	20.2	44.4	19.4	43.0	18.7	40.0	17.3
	-8.5	-9.1	51.8	22.5	48.8	20.9	45.9	19.6	44.4	18.9	43.0	18.2	40.0	16.8
	-7.0	-7.6	51.8	21.3	48.8	20.0	45.9	18.7	44.4	18.0	43.0	17.4	40.0	16.1
	-5.0	-5.6	51.8	20.2	48.8	18.9	45.9	17.7	44.4	17.1	43.0	16.5	40.0	15.3
	-3.0	-3.7	51.8	19.2	48.8	18.0	45.9	16.8	44.4	16.3	43.0	15.7	40.0	14.6
	0.0	-0.7	51.8	17.8	48.8	16.7	45.9	15.7	44.4	15.1	43.0	14.6	40.0	13.6
	3.0	2.2	51.8	16.7	48.8	15.7	45.9	14.7	44.4	14.2	43.0	13.7	40.0	12.8
	5.0	4.1	51.8	16.0	48.8	15.1	45.9	14.1	44.4	13.7	43.0	13.2	40.0	12.3
	7.0	6.0	51.8	15.4	48.8	14.5	45.9	13.6	44.4	13.2	43.0	12.7	40.0	11.9
	9.0	7.9	51.8	14.8	48.8	14.0	45.9	13.1	44.4	12.7	43.0	12.3	40.0	11.5
	11.0	9.8	51.8	14.3	48.8	13.5	45.9	12.7	44.4	12.3	43.0	11.9	40.0	11.1
	13.0	11.8	51.8	13.8	48.8	13.0	45.9	12.2	44.4	11.9	43.0	11.5	40.0	10.8
	15.0	13.7	51.8	13.4	48.8	12.6	45.9	11.9	44.4	11.5	43.0	11.1	40.0	10.4
	19.0	14.2	51.8	13.0	48.8	12.0	45.9	11.5	44.4	11.1	43.0	10.7	40.0	10.0
	21.0	15.0	51.8	12.4	48.8	11.6	45.9	11.0	44.4	10.8	43.0	10.4	40.0	9.6
50	-14.7	-15.0	43.1	22.1	40.7	20.7	38.3	19.4	36.9	18.7	35.7	18.0	33.3	16.7
	-12.6	-13.0	43.1	20.7	40.7	19.4	38.3	18.1	36.9	17.5	35.7	16.8	33.3	15.6
	-10.5	-11.0	43.1	19.4	40.7	18.2	38.3	17.0	36.9	16.4	35.7	15.8	33.3	14.7
	-9.5	-10.0	43.1	18.8	40.7	17.6	38.3	16.5	36.9	15.9	35.7	15.4	33.3	14.3
	-8.5	-9.1	43.1	18.3	40.7	17.1	38.3	16.1	36.9	15.5	35.7	15.0	33.3	13.9
	-7.0	-7.6	43.1	17.5	40.7	16.4	38.3	15.4	36.9	14.9	35.7	14.4	33.3	13.4
	-5.0	-5.6	43.1	16.6	40.7	15.6	38.3	14.6	36.9	14.1	35.7	13.7	33.3	12.7
	-3.0	-3.7	43.1	15.8	40.7	14.9	38.3	14.0	36.9	13.5	35.7	13.1	33.3	12.2
	0.0	-0.7	43.1	14.7	40.7	13.9	38.3	13.0	36.9	12.6	35.7	12.2	33.3	11.4
	3.0	2.2	43.1	13.8	40.7	13.0	38.3	12.3	36.9	11.9	35.7	11.5	33.3	10.8
	5.0	4.1	43.1	13.3	40.7	12.5	38.3	11.8	36.9	11.4	35.7	11.0	33.3	10.4
	7.0	6.0	43.1	12.8	40.7	12.1	38.3	11.4	36.9	11.0	35.7	10.7	33.3	10.0
	9.0	7.9	43.1	12.4	40.7	11.7	38.3	11.0	36.9	10.7	35.7	10.4	33.3	9.7
	11.0	9.8	43.1	11.9	40.7	11.3	38.3	10.7	36.9	10.3	35.7	10.0	33.3	9.4
	13.0	11.8	43.1	11.6	40.7	10.9	38.3	10.3	36.9	10.0	35.7	9.7	33.3	9.1
	15.0	13.7	43.1	11.2	40.7	10.6	38.3	10.0	36.9	9.7	35.7	9.4	33.3	8.9
	19.0	14.2	43.1	10.8	40.7	10.2	38.3	9.7	36.9	9.3	35.7	9.1	33.3	8.5
	21.0	15.0	43.1	10.1	40.7	9.9	38.3	9.4	36.9	8.9	35.7	8.7	33.3	8.1

10) 26HP capacity

heating

capacity factor(%)	outdoor temp.		indoor temp.℃WB											
			16.0		18.0		20.0		21.0		22.0		24.0	
			TC	PI	TC	PI	TC	PI	TC	PI	TC	PI	TC	PI
	℃DB	℃WB	KW	KW	KW	KW	KW	KW	KW	KW	KW	KW	KW	KW
130	-14.7	-15.0	49.4	15.3	49.4	16.2	49.4	17.1	49.3	17.6	49.3	18.0	49.3	18.9
	-12.6	-13.0	52.3	16.2	52.3	17.1	52.3	18.0	52.3	18.4	52.3	18.8	52.3	19.6
	-10.5	-11.0	55.4	17.1	55.4	17.9	55.4	18.7	55.4	19.1	55.4	19.5	55.4	20.2
	-9.5	-10.0	57.1	17.5	57.1	18.3	57.1	19.0	57.1	19.4	57.1	19.8	57.1	20.6
	-8.5	-9.1	58.4	17.8	58.4	18.6	58.4	19.3	58.4	19.7	58.4	20.0	58.4	20.8
	-7.0	-7.6	60.7	18.3	60.7	19.0	60.7	19.8	60.7	20.2	60.7	20.4	60.7	21.2
	-5.0	-5.6	63.7	18.9	63.7	19.6	63.7	20.2	63.7	20.6	63.7	21.0	63.7	21.6
	-3.0	-3.7	66.6	19.5	66.6	20.0	66.6	20.8	66.6	21.2	66.6	21.4	66.6	22.2
	0.0	-0.7	71.3	20.2	71.3	20.8	71.3	21.4	71.3	21.8	71.3	22.0	71.3	22.6
	3.0	2.2	75.5	20.8	75.5	21.4	75.5	22.0	75.5	22.2	75.5	22.6	75.5	23.2
	5.0	4.1	78.6	21.2	78.6	21.8	78.6	22.4	78.6	22.6	78.6	23.0	78.6	23.4
	7.0	6.0	81.5	21.6	81.5	22.2	81.5	22.6	81.5	23.0	81.5	23.2	81.5	23.8
	9.0	7.9	84.4	21.8	84.3	22.4	84.3	23.0	84.3	23.2	84.3	23.4	84.3	24.0
	11.0	9.8	87.3	22.2	87.3	22.6	87.3	23.2	87.3	23.4	87.3	23.8	87.3	24.2
	13.0	11.8	90.5	22.4	90.5	23.0	90.5	23.4	90.5	23.8	90.5	24.0	90.5	24.4
	15.0	13.7	93.3	22.8	93.2	23.2	93.2	23.6	93.2	24.0	93.2	24.2	92.3	24.2
	19.0	14.2	93.3	23.0	93.2	23.5	93.2	23.8	93.2	24.2	93.2	24.4	92.3	23.7
	21.0	15.0	93.3	23.2	93.2	23.7	93.2	24.1	93.2	24.4	93.2	24.0	92.3	23.5
120	-14.7	-15.0	49.4	16.5	49.3	17.4	49.3	18.2	49.3	18.6	49.3	19.0	49.3	19.8
	-12.6	-13.0	52.3	17.4	52.3	18.2	52.3	19.0	52.3	19.4	52.3	19.8	52.3	20.6
	-10.5	-11.0	55.4	18.2	55.4	18.9	55.4	19.6	55.4	20.0	55.4	20.4	55.4	21.2
	-9.5	-10.0	57.1	18.5	57.1	19.2	57.1	20.0	57.1	20.2	57.1	20.6	57.1	21.4
	-8.5	-9.1	58.4	18.8	58.4	19.5	58.4	20.2	58.4	20.6	58.4	21.0	58.4	21.6
	-7.0	-7.6	60.7	19.3	60.7	20.0	60.7	20.6	60.7	21.0	60.7	21.2	60.7	22.0
	-5.0	-5.6	63.7	19.8	63.7	20.4	63.7	21.2	63.7	21.4	63.7	21.8	63.7	22.4
	-3.0	-3.7	66.6	20.4	66.6	21.0	66.6	21.6	66.6	21.8	66.6	22.2	66.6	22.8
	0.0	-0.7	71.3	21.0	71.3	21.6	71.3	22.2	71.3	22.4	71.3	22.8	71.3	23.4
	3.0	2.2	75.5	21.6	75.5	22.2	75.5	22.8	75.5	23.0	75.5	23.2	75.5	23.8
	5.0	4.1	78.6	22.0	78.6	22.4	78.6	23.0	78.6	23.2	78.6	23.6	78.6	24.0
	7.0	6.0	81.5	22.2	81.5	22.8	81.5	23.4	81.5	23.6	81.5	23.8	81.5	24.4
	9.0	7.9	84.3	22.6	84.3	23.0	84.3	23.6	84.3	23.8	84.3	24.0	84.3	24.6
	11.0	9.8	87.3	22.8	87.3	23.4	87.3	23.8	87.3	24.0	87.3	24.2	85.2	23.8
	13.0	11.8	90.5	23.2	90.5	23.6	90.5	24.0	90.5	24.2	90.5	24.6	85.2	23.0
	15.0	13.7	93.2	23.4	93.2	23.8	93.2	24.2	93.2	24.4	91.8	24.0	85.2	22.0
	19.0	14.2	93.2	23.6	93.2	24.0	93.2	24.2	93.2	24.2	91.8	23.6	85.2	21.5
	21.0	15.0	93.2	23.8	93.2	24.2	93.2	24.4	93.2	24.0	91.8	22.9	85.2	21.1
110	-14.7	-15.0	49.3	17.7	49.3	18.5	49.3	19.2	49.3	19.6	49.3	20.0	49.3	20.8
	-12.6	-13.0	52.3	18.5	52.3	19.3	52.3	20.0	52.3	20.4	52.3	20.6	52.3	21.4
	-10.5	-11.0	55.4	19.2	55.4	19.8	55.4	20.6	55.4	21.0	55.4	21.2	55.4	22.0
	-9.5	-10.0	57.1	19.6	57.1	20.2	57.1	20.8	57.1	21.2	57.1	21.6	57.1	22.2
	-8.5	-9.1	58.4	19.8	58.4	20.4	58.4	21.2	58.4	21.4	58.4	21.8	58.4	22.4
	-7.0	-7.6	60.7	20.2	60.7	20.8	60.7	21.4	60.7	21.8	60.7	22.2	60.7	22.8
	-5.0	-5.6	63.7	20.8	63.7	21.4	63.7	22.0	63.7	22.2	63.7	22.6	63.7	23.2
	-3.0	-3.7	66.6	21.2	66.6	21.8	66.6	22.4	66.6	22.6	66.6	23.0	66.6	23.4
	0.0	-0.7	71.3	21.8	71.2	22.4	71.2	23.0	71.2	23.2	71.2	23.4	71.2	24.0
	3.0	2.2	75.5	22.4	75.5	23.0	75.5	23.4	75.5	23.6	75.5	24.0	75.5	24.4
	5.0	4.1	78.6	22.8	78.6	23.2	78.6	23.6	78.6	24.0	78.6	24.2	78.1	24.4
	7.0	6.0	81.5	23.0	81.5	23.4	81.5	24.0	81.5	24.2	81.5	24.4	78.1	23.4
	9.0	7.9	84.3	23.4	84.3	23.8	84.3	24.2	84.3	24.4	83.7	24.4	78.1	22.4
	11.0	9.8	87.3	23.6	87.3	24.0	87.3	24.4	86.7	24.4	83.7	23.4	78.1	21.6

heating

capacity factor(%)	outdoor temp.		indoor temp.℃WB											
			16.0		18.0		20.0		21.0		22.0		24.0	
			TC	PI	TC	PI	TC	PI	TC	PI	TC	PI	TC	PI
	℃DB	℃WB	KW	KW	KW	KW	KW	KW	KW	KW	KW	KW	KW	KW
110	13.0	11.8	90.5	23.8	90.5	24.2	89.7	24.2	86.7	23.4	83.7	22.4	78.1	20.8
	15.0	13.7	93.3	24.0	93.3	24.4	89.7	23.4	86.7	22.6	83.7	21.6	78.1	20.0
	19.0	14.2	93.3	22.4	93.3	24.2	89.7	22.6	86.7	21.7	83.7	20.9	78.1	19.4
	21.0	15.0	93.3	22.6	93.3	23.5	89.7	21.4	86.7	21.1	83.7	20.3	78.1	19.1
100	-14.7	-15.0	49.3	19.0	49.3	19.7	49.3	20.4	49.3	20.6	49.3	21.0	49.3	21.8
	-12.6	-13.0	52.3	19.7	52.3	20.4	52.3	21.0	52.3	21.2	52.3	21.6	52.3	22.2
	-10.5	-11.0	55.4	20.4	55.4	21.0	55.4	21.6	55.4	21.8	55.4	22.2	55.4	22.8
	-9.5	-10.0	57.1	20.6	57.1	21.2	57.1	21.8	57.1	22.2	57.1	22.4	57.1	23.0
	-8.5	-9.1	58.4	20.8	58.4	21.4	58.4	22.0	58.4	22.4	58.4	22.6	58.4	23.2
	-7.0	-7.6	60.7	21.2	60.7	21.8	60.7	22.4	60.7	22.6	60.7	23.0	60.7	23.6
	-5.0	-5.6	63.7	21.8	63.7	22.2	63.7	22.8	63.7	23.0	63.7	23.4	63.7	23.8
	-3.0	-3.7	66.6	22.2	66.6	22.6	66.6	23.2	66.6	23.4	66.6	23.6	66.6	24.2
	0.0	-0.7	71.2	22.8	71.2	23.2	71.2	23.6	71.2	24.0	71.2	24.2	70.9	24.6
	3.0	2.2	75.5	23.2	75.5	23.6	75.5	24.2	75.5	24.4	75.5	24.6	71.1	23.0
	5.0	4.1	78.6	23.4	78.6	24.0	78.6	24.4	78.6	24.6	77.6	23.8	71.1	22.0
	7.0	6.0	81.5	23.8	81.5	24.2	81.5	24.6	78.9	23.6	76.3	22.8	71.1	21.0
	9.0	7.9	84.3	24.0	84.3	24.4	81.5	23.6	78.9	22.8	76.3	21.8	71.1	20.2
	11.0	9.8	87.3	24.2	86.7	24.4	81.5	22.6	78.9	21.8	76.3	21.0	71.1	19.5
	13.0	11.8	90.5	24.4	86.7	23.4	81.5	21.8	78.9	21.0	76.3	20.2	71.1	18.7
	15.0	13.7	91.9	24.0	86.7	22.6	81.5	21.0	78.9	20.2	76.3	19.5	71.1	18.1
	19.0	14.2	91.9	23.4	86.7	21.8	81.5	20.5	78.9	19.4	76.3	18.8	71.1	17.6
	21.0	15.0	91.9	22.6	86.7	20.9	81.5	19.7	78.9	19.1	76.3	18.2	71.1	17.2
90	-14.7	-15.0	49.3	20.2	49.3	20.8	49.3	21.4	49.3	21.8	49.3	22.0	49.3	22.6
	-12.6	-13.0	52.3	20.8	52.3	21.4	52.3	22.0	52.3	22.2	52.3	22.6	52.3	23.2
	-10.5	-11.0	55.4	21.4	55.4	22.0	55.4	22.6	55.4	22.8	55.4	23.0	55.4	23.6
	-9.5	-10.0	57.1	21.6	57.1	22.2	57.1	22.8	57.1	23.0	57.1	23.2	57.1	23.8
	-8.5	-9.1	58.4	21.8	58.4	22.4	58.4	23.0	58.4	23.2	58.4	23.4	58.4	24.0
	-7.0	-7.6	60.7	22.2	60.7	22.8	60.7	23.2	60.7	23.6	60.7	23.8	60.6	24.2
	-5.0	-5.6	63.7	22.6	63.7	23.2	63.7	23.6	63.7	23.8	63.7	24.2	63.1	24.6
	-3.0	-3.7	66.6	23.0	66.6	23.6	66.6	24.0	66.6	24.2	66.6	24.4	63.8	23.6
	0.0	-0.7	71.2	23.6	71.2	24.0	71.2	24.4	70.7	24.6	68.6	23.6	63.8	21.8
	3.0	2.2	75.5	24.0	75.5	24.4	73.3	23.8	70.8	23.0	68.6	22.0	63.8	20.4
	5.0	4.1	78.6	24.2	78.1	24.4	73.3	22.8	70.8	22.0	68.6	21.0	63.8	19.5
	7.0	6.0	81.5	24.4	78.1	23.4	73.3	21.8	70.8	21.0	68.6	20.2	63.8	18.7
	9.0	7.9	82.8	24.0	78.1	22.4	73.3	21.0	70.8	20.2	68.6	19.5	63.8	18.0
	11.0	9.8	82.8	23.0	78.1	21.6	73.3	20.2	70.8	19.4	68.6	18.7	63.8	17.4
	13.0	11.8	82.8	22.2	78.1	20.8	73.3	19.4	70.8	18.7	68.6	18.1	63.8	16.7
	15.0	13.7	82.8	21.4	78.1	20.0	73.3	18.7	70.8	18.1	68.6	17.4	63.8	16.2
	19.0	14.2	82.8	20.9	78.1	19.5	73.3	18.1	70.8	17.5	68.6	16.8	63.8	15.6
	21.0	15.0	82.8	20.1	78.1	18.7	73.3	17.8	70.8	17.0	68.6	16.2	63.8	15.0
80	-14.7	-15.0	49.3	21.4	49.3	22.0	49.3	22.6	49.3	22.8	49.3	23.0	49.3	23.6
	-12.6	-13.0	52.3	22.0	52.3	22.4	52.3	23.0	52.3	23.2	52.3	23.6	52.3	24.0
	-10.5	-11.0	55.4	22.4	55.4	23.0	55.4	23.4	55.4	23.8	55.4	24.0	55.2	24.4
	-9.5	-10.0	57.1	22.8	57.1	23.2	57.1	23.6	57.1	24.0	57.1	24.2	56.3	24.6
	-8.5	-9.1	58.4	23.0	58.4	23.4	58.4	23.8	58.4	24.2	58.4	24.4	56.8	24.2
	-7.0	-7.6	60.7	23.2	60.7	23.6	60.6	24.2	60.6	24.4	60.1	24.6	56.8	23.0
	-5.0	-5.6	63.7	23.6	63.7	24.0	63.7	24.4	62.9	24.6	61.0	23.6	56.8	21.8
	-3.0	-3.7	66.6	24.0	66.6	24.4	65.2	24.2	62.9	23.2	61.0	22.4	56.8	20.6
	0.0	-0.7	71.2	24.4	69.3	24.0	65.2	22.4	62.9	21.6	61.0	20.6	56.8	19.2
	3.0	2.2	73.4	23.8	69.3	22.4	65.2	20.8	62.9	20.0	61.0	19.4	56.8	17.9
	5.0	4.1	73.4	22.8	69.3	21.4	65.2	20.0	62.9	19.2	61.0	18.5	56.8	17.2
	7.0	6.0	73.4	21.8	69.3	20.4	65.2	19.1	62.9	18.5	61.0	17.8	56.8	16.5
	9.0	7.9	73.4	21.0	69.3	19.7	65.2	18.4	62.9	17.8	61.0	17.2	56.8	15.9
	11.0	9.8	73.4	20.2	69.3	19.0	65.2	17.7	62.9	17.1	61.0	16.5	56.8	15.4
	13.0	11.8	73.4	19.5	69.3	18.3	65.2	17.1	62.9	16.5	61.0	15.9	56.8	14.8
	15.0	13.7	73.4	18.8	69.3	17.5	65.2	16.5	62.9	16.0	61.0	15.4	56.8	14.3
	19.0	14.2	73.4	18.1	69.3	17.1	65.2	15.8	62.9	15.4	61.0	14.8	56.8	14.0
	21.0	15.0	73.4	17.6	69.3	16.4	65.2	15.4	62.9	14.9	61.0	14.3	56.8	13.2

heating

capacity factor(%)	outdoor temp.		indoor temp.℃WB											
			16.0		18.0		20.0		21.0		22.0		24.0	
			TC	PI	TC	PI	TC	PI	TC	PI	TC	PI	TC	PI
	℃DB	℃WB	KW	KW	KW	KW	KW	KW	KW	KW	KW	KW	KW	KW
70	-14.7	-15.0	49.3	22.6	49.3	23.2	49.3	23.6	49.3	23.8	49.3	24.0	48.5	24.6
	-12.6	-13.0	52.3	23.2	52.3	23.6	52.3	24.0	52.3	24.2	51.8	24.6	49.7	23.6
	-10.5	-11.0	55.4	23.6	55.4	24.0	55.3	24.4	54.5	24.6	53.3	23.8	49.7	22.0
	-9.5	-10.0	57.1	23.8	57.1	24.2	56.4	24.6	55.1	24.0	53.3	23.0	49.7	21.2
	-8.5	-9.1	58.4	24.0	58.4	24.4	57.1	24.2	55.1	23.4	53.3	22.4	49.7	20.8
	-7.0	-7.6	60.6	24.2	60.0	24.6	57.1	23.2	55.1	22.2	53.3	21.4	49.7	19.8
	-5.0	-5.6	63.4	24.6	60.7	23.4	57.1	21.8	55.1	21.0	53.3	20.2	49.7	18.8
	-3.0	-3.7	64.3	23.8	60.7	22.2	57.1	20.8	55.1	20.0	53.3	19.3	49.7	17.9
	0.0	-0.7	64.3	22.0	60.7	20.6	57.1	19.3	55.1	18.6	53.3	17.9	49.7	16.6
	3.0	2.2	64.3	20.6	60.7	19.3	57.1	18.0	55.1	17.4	53.3	16.8	49.7	15.6
	5.0	4.1	64.3	19.7	60.7	18.5	57.1	17.3	55.1	16.7	53.3	16.1	49.7	15.0
	7.0	6.0	64.3	18.9	60.7	17.7	57.1	16.6	55.1	16.0	53.3	15.5	49.7	14.4
	9.0	7.9	64.3	18.2	60.7	17.1	57.1	16.0	55.1	15.5	53.3	14.9	49.7	13.9
	11.0	9.8	64.3	17.5	60.7	16.4	57.1	15.4	55.1	14.9	53.3	14.3	49.7	13.4
	13.0	11.8	64.3	16.9	60.7	15.9	57.1	14.9	55.1	14.4	53.3	13.9	49.7	13.0
	15.0	13.7	64.3	16.3	60.7	15.3	57.1	14.4	55.1	13.9	53.3	13.5	49.7	12.6
	19.0	14.2	64.3	15.5	60.7	14.9	57.1	14.0	55.1	13.3	53.3	12.7	49.7	12.1
	21.0	15.0	64.3	14.9	60.7	14.2	57.1	13.4	55.1	12.7	53.3	12.1	49.7	11.4
60	-14.7	-15.0	49.3	23.8	49.3	24.2	48.2	24.6	47.3	23.8	45.8	23.0	42.6	21.2
	-12.6	-13.0	52.3	24.2	51.3	24.6	48.9	23.0	47.3	22.2	45.8	21.4	42.6	19.8
	-10.5	-11.0	54.5	24.6	51.9	23.2	48.9	21.6	47.3	20.8	45.8	20.0	42.6	18.6
	-9.5	-10.0	55.1	24.0	51.9	22.4	48.9	21.0	47.3	20.2	45.8	19.5	42.6	18.0
	-8.5	-9.1	55.1	23.4	51.9	21.8	48.9	20.4	47.3	19.7	45.8	18.9	42.6	17.6
	-7.0	-7.6	55.1	22.2	51.9	20.8	48.9	19.5	47.3	18.8	45.8	18.2	42.6	16.8
	-5.0	-5.6	55.1	21.0	51.9	19.7	48.9	18.5	47.3	17.8	45.8	17.2	42.6	16.0
	-3.0	-3.7	55.1	20.0	51.9	18.8	48.9	17.6	47.3	17.0	45.8	16.4	42.6	15.2
	0.0	-0.7	55.1	18.6	51.9	17.4	48.9	16.3	47.3	15.8	45.8	15.3	42.6	14.2
	3.0	2.2	55.1	17.4	51.9	16.3	48.9	15.3	47.3	14.8	45.8	14.3	42.6	13.4
	5.0	4.1	55.1	16.7	51.9	15.7	48.9	14.7	47.3	14.2	45.8	13.8	42.6	12.8
	7.0	6.0	55.1	16.0	51.9	15.1	48.9	14.2	47.3	13.7	45.8	13.3	42.6	12.4
	9.0	7.9	55.1	15.5	51.9	14.6	48.9	13.7	47.3	13.3	45.8	12.8	42.6	12.0
	11.0	9.8	55.1	14.9	51.9	14.0	48.9	13.2	47.3	12.8	45.8	12.4	42.6	11.6
	13.0	11.8	55.1	14.4	51.9	13.6	48.9	12.8	47.3	12.4	45.8	12.0	42.6	11.2
	15.0	13.7	55.1	13.9	51.9	13.1	48.9	12.4	47.3	12.0	45.8	11.6	42.6	10.9
	19.0	14.2	55.1	13.5	51.9	12.5	48.9	12.0	47.3	11.6	45.8	11.2	42.6	10.4
	21.0	15.0	55.1	13.0	51.9	12.1	48.9	11.5	47.3	11.2	45.8	10.8	42.6	10.0
50	-14.7	-15.0	46.0	23.0	43.3	21.6	40.8	20.2	39.4	19.5	38.1	18.8	35.4	17.4
	-12.6	-13.0	46.0	21.6	43.3	20.2	40.8	18.8	39.4	18.2	38.1	17.6	35.4	16.3
	-10.5	-11.0	46.0	20.2	43.3	18.9	40.8	17.7	39.4	17.1	38.1	16.5	35.4	15.3
	-9.5	-10.0	46.0	19.6	43.3	18.4	40.8	17.2	39.4	16.6	38.1	16.0	35.4	14.9
	-8.5	-9.1	46.0	19.0	43.3	17.9	40.8	16.7	39.4	16.2	38.1	15.6	35.4	14.5
	-7.0	-7.6	46.0	18.3	43.3	17.1	40.8	16.0	39.4	15.5	38.1	15.0	35.4	14.0
	-5.0	-5.6	46.0	17.3	43.3	16.2	40.8	15.2	39.4	14.7	38.1	14.2	35.4	13.3
	-3.0	-3.7	46.0	16.5	43.3	15.5	40.8	14.5	39.4	14.1	38.1	13.6	35.4	12.7
	0.0	-0.7	46.0	15.3	43.3	14.4	40.8	13.6	39.4	13.2	38.1	12.7	35.4	11.9
	3.0	2.2	46.0	14.4	43.3	13.6	40.8	12.8	39.4	12.4	38.1	12.0	35.4	11.2
	5.0	4.1	46.0	13.8	43.3	13.1	40.8	12.3	39.4	11.9	38.1	11.6	35.4	10.8
	7.0	6.0	46.0	13.3	43.3	12.6	40.8	11.9	39.4	11.5	38.1	11.1	35.4	10.5
	9.0	7.9	46.0	12.9	43.3	12.2	40.8	11.5	39.4	11.1	38.1	10.8	35.4	10.1
	11.0	9.8	46.0	12.4	43.3	11.8	40.8	11.1	39.4	10.8	38.1	10.5	35.4	9.8
	13.0	11.8	46.0	12.0	43.3	11.4	40.8	10.8	39.4	10.4	38.1	10.1	35.4	9.5
	15.0	13.7	46.0	11.7	43.3	11.1	40.8	10.4	39.4	10.1	38.1	9.8	35.4	9.2
	19.0	14.2	46.0	11.3	43.3	10.6	40.8	10.1	39.4	9.7	38.1	9.5	35.4	8.8
	21.0	15.0	46.0	10.6	43.3	10.3	40.8	9.8	39.4	9.3	38.1	9.1	35.4	8.5

11) 28HP capacity

heating

capacity factor(%)	outdoor temp.		indoor temp.℃WB											
			16.0		18.0		20.0		21.0		22.0		24.0	
			TC	PI	TC	PI	TC	PI	TC	PI	TC	PI	TC	PI
	℃DB	℃WB	KW	KW	KW	KW	KW	KW	KW	KW	KW	KW	KW	KW
130	-14.7	-15.0	52.9	16.6	52.9	17.6	52.9	18.5	52.9	19.0	52.9	19.5	52.9	20.4
	-12.6	-13.0	56.0	17.6	56.0	18.5	56.0	19.3	56.0	19.8	56.0	20.2	56.0	21.1
	-10.5	-11.0	59.2	18.4	59.2	19.2	59.2	20.1	59.2	20.5	59.2	20.9	59.2	21.7
	-9.5	-10.0	61.4	18.8	61.4	19.6	61.4	20.4	61.4	20.8	61.4	21.2	61.4	22.1
	-8.5	-9.1	63.3	19.1	63.3	19.9	63.3	20.7	63.3	21.1	63.3	21.5	63.3	22.3
	-7.0	-7.6	66.0	19.6	66.0	20.4	66.0	21.2	66.0	21.6	66.0	21.9	66.0	22.7
	-5.0	-5.6	69.3	20.2	69.3	21.0	69.3	21.6	69.3	22.0	69.3	22.4	69.3	23.1
	-3.0	-3.7	72.4	20.8	72.4	21.4	72.4	22.2	72.4	22.6	72.4	22.8	72.4	23.6
	0.0	-0.7	76.9	21.5	76.9	22.2	76.9	22.8	76.9	23.2	76.9	23.4	76.9	24.1
	3.0	2.2	81.0	22.2	81.0	22.8	81.0	23.4	81.0	23.6	81.0	24.0	81.0	24.7
	5.0	4.1	84.3	22.5	84.3	23.2	84.3	23.8	84.3	24.0	84.3	24.4	84.3	24.9
	7.0	6.0	87.5	22.9	87.5	23.5	87.5	24.0	87.5	24.3	87.5	24.7	87.5	25.2
	9.0	7.9	90.7	23.2	90.7	23.8	90.7	24.3	90.7	24.7	90.7	24.9	90.7	25.4
	11.0	9.8	94.2	23.5	94.2	24.0	94.2	24.7	94.2	24.9	94.2	25.2	94.2	25.7
	13.0	11.8	96.9	23.8	96.9	24.3	96.9	24.9	96.9	25.2	96.9	25.4	96.9	25.9
	15.0	13.7	99.9	24.1	99.8	24.6	99.8	25.1	99.8	25.4	99.8	25.7	98.9	25.9
	19.0	14.2	99.9	24.4	99.8	24.9	99.8	25.3	99.8	25.7	99.8	25.9	98.9	25.3
	21.0	15.0	99.9	24.7	99.8	25.2	99.8	25.6	99.8	25.9	99.8	25.8	98.9	24.6
120	-14.7	-15.0	52.9	17.9	52.9	18.8	52.9	19.7	52.9	20.1	52.9	20.5	52.9	21.4
	-12.6	-13.0	56.0	18.8	56.0	19.6	56.0	20.4	56.0	20.8	56.0	21.2	56.0	22.1
	-10.5	-11.0	59.2	19.5	59.2	20.3	59.2	21.1	59.2	21.5	59.2	21.9	59.2	22.7
	-9.5	-10.0	61.4	19.9	61.4	20.6	61.4	21.4	61.4	21.7	61.4	22.1	61.4	22.9
	-8.5	-9.1	63.3	20.2	63.3	20.9	63.3	21.6	63.3	22.0	63.3	22.4	63.3	23.1
	-7.0	-7.6	66.0	20.7	66.0	21.4	66.0	22.0	66.0	22.4	66.0	22.7	66.0	23.5
	-5.0	-5.6	69.3	21.2	69.3	21.8	69.3	22.6	69.3	22.9	69.3	23.3	69.3	23.9
	-3.0	-3.7	72.4	21.8	72.4	22.4	72.4	23.0	72.4	23.3	72.4	23.6	72.4	24.3
	0.0	-0.7	76.9	22.4	76.9	23.0	76.9	23.6	76.9	23.9	76.9	24.2	76.9	24.3
	3.0	2.2	81.0	23.0	81.0	23.5	81.0	24.2	81.0	24.4	81.0	24.7	81.0	25.3
	5.0	4.1	84.3	23.4	84.3	23.9	84.3	24.4	84.3	24.7	84.3	25.0	84.3	25.5
	7.0	6.0	87.5	23.6	87.5	24.2	87.5	24.8	87.5	25.0	87.5	25.2	87.5	25.9
	9.0	7.9	90.7	24.0	90.7	24.4	90.7	25.0	90.7	25.2	90.7	25.4	91.0	26.1
	11.0	9.8	94.2	24.2	94.2	24.8	94.2	25.2	94.2	25.4	94.2	25.7	91.5	25.4
	13.0	11.8	96.9	24.6	96.9	25.0	96.9	25.4	96.9	25.7	96.9	26.0	91.5	24.5
	15.0	13.7	99.8	24.8	99.8	25.2	99.8	25.7	99.8	25.9	98.2	25.6	91.5	23.5
	19.0	14.2	99.8	25.2	99.8	25.6	99.8	25.9	99.8	25.6	98.2	25.1	91.5	23.1
	21.0	15.0	99.8	25.5	99.8	25.6	99.8	25.6	99.8	25.2	98.2	24.3	91.5	22.7
110	-14.7	-15.0	52.9	19.2	52.9	20.0	52.9	20.7	52.9	21.2	52.9	21.6	52.9	22.4
	-12.6	-13.0	56.0	20.0	56.0	20.7	56.0	21.5	56.0	21.9	56.0	22.2	56.0	23.0
	-10.5	-11.0	59.2	20.7	59.2	21.3	59.2	22.1	59.2	22.5	59.2	22.7	59.2	23.5
	-9.5	-10.0	61.4	21.0	61.4	21.7	61.4	22.3	61.4	22.7	61.4	23.1	61.4	23.7
	-8.5	-9.1	63.3	21.2	63.3	21.9	63.3	22.6	63.3	22.9	63.3	23.3	63.3	24.0
	-7.0	-7.6	66.0	21.6	66.0	22.3	66.0	22.9	66.0	23.3	66.0	23.6	66.0	24.3
	-5.0	-5.6	69.3	22.2	69.3	22.8	69.3	23.4	69.3	23.7	69.3	24.1	69.3	24.7
	-3.0	-3.7	72.4	22.6	72.4	23.3	72.4	23.9	72.4	24.1	72.4	24.5	72.4	25.0
	0.0	-0.7	76.9	23.3	76.9	23.9	76.9	24.4	76.9	24.7	76.9	24.9	76.9	25.5
	3.0	2.2	81.0	23.9	81.0	24.4	81.0	24.9	81.0	25.1	81.0	25.4	81.0	25.9
	5.0	4.1	84.3	24.2	84.3	24.7	84.3	25.1	84.3	25.4	84.3	25.7	83.9	25.9
	7.0	6.0	87.5	24.4	87.5	24.9	87.5	25.4	87.5	25.7	87.5	25.9	83.9	24.8
	9.0	7.9	90.7	24.8	90.7	25.2	90.7	25.7	90.7	25.9	90.0	25.7	83.9	23.9
	11.0	9.8	94.2	25.0	94.2	25.4	94.2	25.9	93.1	26.0	90.0	25.0	83.9	23.0

heating

capacity factor(%)	outdoor temp.		indoor temp.℃WB											
			16.0		18.0		20.0		21.0		22.0		24.0	
			TC	PI	TC	PI	TC	PI	TC	PI	TC	PI	TC	PI
	℃DB	℃WB	KW	KW	KW	KW	KW	KW	KW	KW	KW	KW	KW	KW
110	13.0	11.8	96.9	25.2	96.9	25.7	96.1	25.9	93.1	25.0	90.0	24.0	83.9	22.2
	15.0	13.7	99.9	25.4	99.9	25.9	96.3	25.0	93.1	24.1	90.0	23.1	83.9	21.4
	19.0	14.2	99.9	24.7	99.9	25.5	96.3	24.1	93.1	23.1	90.0	22.2	83.9	20.8
	21.0	15.0	99.9	24.6	99.9	24.8	96.3	23.1	93.1	22.3	90.0	21.6	83.9	20.4
100	-14.7	-15.0	52.9	20.4	52.9	21.2	52.9	21.9	52.9	22.2	52.9	22.6	52.9	23.3
	-12.6	-13.0	56.0	21.2	56.0	21.9	56.0	22.5	56.0	22.8	56.0	23.2	56.0	23.8
	-10.5	-11.0	59.2	21.8	59.2	22.5	59.2	23.1	59.2	23.4	59.2	23.7	59.2	24.3
	-9.5	-10.0	61.4	22.1	61.4	22.7	61.4	23.3	61.4	23.6	61.4	24.0	61.4	24.5
	-8.5	-9.1	63.3	22.3	63.3	22.9	63.3	23.5	63.3	23.9	63.3	24.2	63.3	24.8
	-7.0	-7.6	66.0	22.7	66.0	23.3	66.0	23.9	66.0	24.2	66.0	24.5	66.0	25.1
	-5.0	-5.6	69.3	23.2	69.3	23.7	69.3	24.3	69.3	24.5	69.3	24.9	69.3	25.4
	-3.0	-3.7	72.4	23.6	72.4	24.1	72.4	24.7	72.4	24.9	72.4	25.2	72.4	25.8
	0.0	-0.7	76.9	24.2	76.9	24.7	76.9	25.1	76.9	25.4	76.9	25.7	76.0	25.9
	3.0	2.2	81.0	24.7	81.0	25.1	81.0	25.7	81.0	25.9	81.0	26.1	76.2	24.3
	5.0	4.1	84.3	24.9	84.3	25.4	84.3	25.9	84.3	26.1	83.2	25.2	76.2	23.3
	7.0	6.0	87.5	25.2	87.5	25.7	87.5	26.1	84.6	25.1	81.9	24.2	76.2	22.3
	9.0	7.9	90.7	25.4	90.5	25.9	87.5	25.1	84.6	24.2	81.9	23.2	76.2	21.5
	11.0	9.8	94.2	25.7	93.0	26.0	87.5	24.1	84.6	23.3	81.9	22.4	76.2	21.7
	13.0	11.8	96.9	25.9	93.0	24.9	87.5	23.3	84.6	22.4	81.9	21.6	76.2	20.0
	15.0	13.7	98.7	25.6	93.0	24.1	87.5	22.4	84.6	21.6	81.9	20.9	76.2	19.3
	19.0	14.2	98.7	24.9	93.0	23.3	87.5	21.9	84.6	20.7	81.9	19.9	76.2	18.5
	21.0	15.0	98.7	24.2	93.0	22.4	87.5	21.0	84.6	20.1	81.9	19.1	76.2	18.0
90	-14.7	-15.0	52.9	21.7	52.9	22.4	52.9	23.0	52.9	23.4	52.9	23.6	52.9	24.2
	-12.6	-13.0	56.0	22.4	56.0	23.0	56.0	23.5	56.0	23.8	56.0	24.1	56.0	24.8
	-10.5	-11.0	59.2	22.9	59.2	23.5	59.2	24.1	59.2	24.4	59.2	24.5	59.2	25.1
	-9.5	-10.0	61.4	23.1	61.4	23.7	61.4	24.4	61.4	24.6	61.4	24.8	61.4	25.4
	-8.5	-9.1	63.3	23.3	63.3	24.0	63.3	24.6	63.3	24.9	63.3	25.0	63.3	25.6
	-7.0	-7.6	66.0	23.7	66.0	24.3	66.0	24.9	66.0	25.2	66.0	25.4	66.0	25.9
	-5.0	-5.6	69.3	24.1	69.3	24.7	69.3	25.2	69.3	25.4	69.3	25.8	67.9	25.8
	-3.0	-3.7	72.4	24.5	72.4	25.1	72.4	25.5	72.4	25.8	72.4	26.0	68.6	24.9
	0.0	-0.7	76.9	25.1	76.9	25.5	76.9	26.0	76.0	25.8	73.6	25.0	68.6	22.8
	3.0	2.2	81.0	25.5	82.0	25.9	78.7	25.1	76.1	24.3	73.6	23.3	68.6	21.6
	5.0	4.1	84.3	25.8	83.6	25.9	78.7	24.1	76.1	23.3	73.6	22.3	68.6	20.7
	7.0	6.0	87.5	26.0	83.6	24.9	78.7	23.2	76.1	22.3	73.6	21.5	68.6	19.9
	9.0	7.9	88.8	25.5	83.6	23.9	78.7	22.3	76.1	21.5	73.6	20.7	68.6	19.1
	11.0	9.8	88.8	24.5	83.6	23.0	78.7	21.5	76.1	20.7	73.6	19.9	68.6	18.5
	13.0	11.8	88.8	23.6	83.6	22.2	78.7	20.7	76.1	20.0	73.6	19.3	68.6	17.9
	15.0	13.7	88.8	22.8	83.6	21.4	78.7	20.0	76.1	19.3	73.6	18.6	68.6	17.3
	19.0	14.2	88.8	22.2	83.6	20.8	78.7	19.3	76.1	18.6	73.6	17.9	68.6	16.5
	21.0	15.0	88.8	21.3	83.6	19.8	78.7	18.9	76.1	17.9	73.6	17.1	68.6	15.9
80	-14.7	-15.0	52.9	23.0	52.9	23.6	52.9	24.2	52.9	24.4	52.9	24.6	52.9	25.2
	-12.6	-13.0	56.0	23.5	56.0	24.1	56.0	24.6	56.0	24.9	56.0	25.2	56.0	25.6
	-10.5	-11.0	59.2	24.0	59.2	24.5	59.2	25.0	59.2	25.3	59.2	25.6	59.3	25.9
	-9.5	-10.0	61.4	24.3	61.4	24.8	61.4	25.2	61.4	25.5	61.4	25.8	60.4	25.7
	-8.5	-9.1	63.3	24.5	63.3	25.0	63.3	25.4	63.3	25.8	63.3	26.0	60.9	25.1
	-7.0	-7.6	66.0	24.8	66.0	25.2	66.0	25.8	66.0	26.0	64.5	25.8	60.9	24.0
	-5.0	-5.6	69.3	25.2	69.3	25.5	69.3	26.0	67.6	25.7	65.4	24.7	60.9	22.8
	-3.0	-3.7	72.4	25.5	72.4	26.0	70.0	25.4	67.6	24.4	65.4	23.5	60.9	21.7
	0.0	-0.7	76.9	26.0	74.3	25.1	70.0	23.6	67.6	22.7	65.4	21.8	60.9	20.2
	3.0	2.2	78.9	25.2	74.3	23.7	70.0	22.1	67.6	21.2	65.4	20.5	60.9	19.0
	5.0	4.1	78.9	24.2	74.3	22.7	70.0	21.2	67.6	20.4	65.4	19.7	60.9	18.2
	7.0	6.0	78.9	23.2	74.3	21.7	70.0	20.3	67.6	19.6	65.4	18.9	60.9	17.5
	9.0	7.9	78.9	22.3	74.3	20.9	70.0	19.6	67.6	18.9	65.4	18.2	60.9	16.9
	11.0	9.8	78.9	21.5	74.3	20.2	70.0	18.9	67.6	18.2	65.4	17.6	60.9	16.4
	13.0	11.8	78.9	20.7	74.3	19.5	70.0	18.2	67.6	17.6	65.4	17.0	60.9	15.8
	15.0	13.7	78.9	20.1	74.3	18.7	70.0	17.6	67.6	17.0	65.4	16.4	60.9	15.3
	19.0	14.2	78.9	19.4	74.3	18.3	70.0	17.0	67.6	16.3	65.4	15.8	60.9	14.8
	21.0	15.0	78.9	18.7	74.3	17.6	70.0	16.4	67.6	15.7	65.4	15.1	60.9	14.1

heating

capacity factor(%)	outdoor temp.		indoor temp.℃WB											
			16.0		18.0		20.0		21.0		22.0		24.0	
			TC	PI	TC	PI	TC	PI	TC	PI	TC	PI	TC	PI
	℃DB	℃WB	KW	KW	KW	KW	KW	KW	KW	KW	KW	KW	KW	KW
70	-14.7	-15.0	52.9	24.2	52.9	24.8	52.9	25.3	52.9	25.5	52.9	25.7	52.2	25.7
	-12.6	-13.0	56.0	24.8	56.0	25.2	56.0	25.6	56.0	25.9	55.7	25.8	53.4	24.5
	-10.5	-11.0	59.2	25.1	59.2	25.6	59.4	25.9	58.5	25.5	57.2	24.8	53.4	23.0
	-9.5	-10.0	61.4	25.3	61.4	25.8	60.5	25.7	59.1	24.9	57.2	24.0	53.4	22.1
	-8.5	-9.1	63.3	25.5	63.3	26.0	61.2	25.2	59.1	24.3	57.2	23.4	53.4	21.7
	-7.0	-7.6	66.0	25.8	64.4	25.7	61.2	24.3	59.1	23.2	57.2	22.4	53.4	20.7
	-5.0	-5.6	68.1	26.0	65.1	24.6	61.2	22.9	59.1	22.1	57.2	21.2	53.4	19.7
	-3.0	-3.7	69.0	25.0	65.1	23.3	61.2	21.9	59.1	21.1	57.2	20.3	53.4	18.8
	0.0	-0.7	69.0	23.2	65.1	21.7	61.2	20.3	59.1	19.6	57.2	18.9	53.4	17.5
	3.0	2.2	69.0	21.8	65.1	20.4	61.2	19.0	59.1	18.4	57.2	17.7	53.4	16.5
	5.0	4.1	69.0	20.9	65.1	19.6	61.2	18.3	59.1	17.7	57.2	17.1	53.4	15.9
	7.0	6.0	69.0	20.0	65.1	18.8	61.2	17.6	59.1	17.0	57.2	16.4	53.4	15.3
	9.0	7.9	69.0	19.3	65.1	18.2	61.2	17.0	59.1	16.4	57.2	15.9	53.4	14.8
	11.0	9.8	69.0	18.6	65.1	17.5	61.2	16.4	59.1	15.9	57.2	15.3	53.4	14.3
	13.0	11.8	69.0	18.0	65.1	16.9	61.2	15.8	59.1	15.3	57.2	14.8	53.4	13.8
	15.0	13.7	69.0	17.4	65.1	16.4	61.2	15.4	59.1	14.8	57.2	14.4	53.4	13.4
	19.0	14.2	69.0	16.6	65.1	15.8	61.2	14.9	59.1	14.4	57.2	13.6	53.4	12.9
	21.0	15.0	69.0	16.0	65.1	14.9	61.2	14.2	59.1	13.5	57.2	13.0	53.4	12.2
60	-14.7	-15.0	52.9	25.5	52.9	25.9	51.7	25.5	50.8	24.5	49.1	23.7	45.6	21.9
	-12.6	-13.0	56.0	25.9	55.1	25.5	52.4	23.8	50.8	23.0	49.1	22.2	45.6	20.5
	-10.5	-11.0	58.5	25.5	55.7	24.2	52.4	22.5	50.8	21.7	49.1	20.9	45.6	19.3
	-9.5	-10.0	59.1	24.9	55.7	23.3	52.4	21.8	50.8	21.0	49.1	20.3	45.6	18.8
	-8.5	-9.1	59.1	24.3	55.7	22.8	52.4	21.3	50.8	20.5	49.1	19.8	45.6	18.3
	-7.0	-7.6	59.1	23.2	55.7	21.8	52.4	20.4	50.8	19.7	49.1	19.0	45.6	17.6
	-5.0	-5.6	59.1	22.1	55.7	20.7	52.4	19.4	50.8	18.7	49.1	18.0	45.6	16.7
	-3.0	-3.7	59.1	21.1	55.7	19.7	52.4	18.5	50.8	17.8	49.1	17.2	45.6	16.0
	0.0	-0.7	59.1	19.6	55.7	18.4	52.4	17.2	50.8	16.6	49.1	16.1	45.6	14.9
	3.0	2.2	59.1	18.4	55.7	17.3	52.4	16.2	50.8	15.6	49.1	15.1	45.6	14.1
	5.0	4.1	59.1	17.7	55.7	16.6	52.4	15.6	50.8	15.1	49.1	14.6	45.6	13.6
	7.0	6.0	59.1	17.0	55.7	16.0	52.4	15.0	50.8	14.6	49.1	14.1	45.6	13.1
	9.0	7.9	59.1	16.4	55.7	15.5	52.4	14.5	50.8	14.1	49.1	13.6	45.6	12.7
	11.0	9.8	59.1	15.9	55.7	14.9	52.4	14.1	50.8	13.6	49.1	13.2	45.6	12.3
	13.0	11.8	59.1	15.3	55.7	14.4	52.4	13.6	50.8	13.2	49.1	12.8	45.6	11.9
	15.0	13.7	59.1	14.8	55.7	14.0	52.4	13.2	50.8	12.8	49.1	12.4	45.6	11.6
	19.0	14.2	59.1	14.4	55.7	13.4	52.4	12.7	50.8	12.2	49.1	11.8	45.6	11.1
	21.0	15.0	59.1	13.7	55.7	12.9	52.4	12.1	50.8	11.8	49.1	11.4	45.6	10.6
50	-14.7	-15.0	49.3	23.8	46.4	22.3	43.7	20.8	42.3	20.1	40.9	19.4	38.0	18.0
	-12.6	-13.0	49.3	22.3	46.4	20.9	43.7	19.5	42.3	18.9	40.9	18.2	38.0	16.9
	-10.5	-11.0	49.3	21.0	46.4	19.7	43.7	18.4	42.3	17.8	40.9	17.2	38.0	16.0
	-9.5	-10.0	49.3	20.4	46.4	19.1	43.7	17.9	42.3	17.3	40.9	16.7	38.0	15.5
	-8.5	-9.1	49.3	19.9	46.4	18.6	43.7	17.5	42.3	16.9	40.9	16.3	38.0	15.2
	-7.0	-7.6	49.3	19.1	46.4	17.9	43.7	16.8	42.3	16.2	40.9	15.7	38.0	14.6
	-5.0	-5.6	49.3	18.1	46.4	17.1	43.7	16.0	42.3	15.4	40.9	14.9	38.0	13.9
	-3.0	-3.7	49.3	17.3	46.4	16.3	43.7	15.3	42.3	14.8	40.9	14.3	38.0	13.3
	0.0	-0.7	49.3	16.2	46.4	15.3	43.7	14.3	42.3	13.9	40.9	13.4	38.0	12.5
	3.0	2.2	49.3	15.2	46.4	14.4	43.7	13.5	42.3	13.1	40.9	12.7	38.0	11.8
	5.0	4.1	49.3	14.7	46.4	13.9	43.7	13.1	42.3	12.6	40.9	12.3	38.0	11.5
	7.0	6.0	49.3	14.1	46.4	13.4	43.7	12.6	42.3	12.2	40.9	11.8	38.0	11.1
	9.0	7.9	49.3	13.7	46.4	12.9	43.7	12.2	42.3	11.8	40.9	11.5	38.0	10.8
	11.0	9.8	49.3	13.2	46.4	12.5	43.7	11.8	42.3	11.5	40.9	11.1	38.0	10.4
	13.0	11.8	49.3	12.8	46.4	12.1	43.7	11.4	42.3	11.1	40.9	10.8	38.0	10.1
	15.0	13.7	49.3	12.4	46.4	11.8	43.7	11.1	42.3	10.8	40.9	10.5	38.0	9.8
	19.0	14.2	49.3	12.0	46.4	11.3	43.7	10.6	42.3	10.3	40.9	10.0	38.0	9.5
	21.0	15.0	49.3	11.4	46.4	10.8	43.7	10.3	42.3	9.9	40.9	9.7	38.0	9.1

12) 30HP capacity

heating

capacity factor(%)	outdoor temp.		indoor temp.℃WB											
			16.0		18.0		20.0		21.0		22.0		24.0	
			TC	PI	TC	PI	TC	PI	TC	PI	TC	PI	TC	PI
	℃DB	℃WB	KW	KW	KW	KW	KW	KW	KW	KW	KW	KW	KW	KW
130	-14.7	-15.0	56.1	18.0	56.1	19.1	56.1	20.2	56.1	20.7	56.1	21.2	56.1	22.3
	-12.6	-13.0	59.6	19.2	59.6	20.2	59.6	21.2	59.6	21.7	59.6	22.2	59.6	23.2
	-10.5	-11.0	63.4	20.1	63.4	21.1	63.4	22.0	63.4	22.5	63.4	23.0	63.4	23.9
	-9.5	-10.0	65.5	20.6	65.5	21.5	65.5	22.4	65.5	22.9	65.5	23.4	65.5	24.3
	-8.5	-9.1	67.0	21.0	67.0	21.9	67.0	22.8	67.0	23.2	67.0	23.6	67.0	24.6
	-7.0	-7.6	69.7	21.6	69.7	22.5	69.7	23.3	69.7	23.9	69.7	24.1	69.7	25.0
	-5.0	-5.6	73.5	22.3	73.5	23.1	73.5	23.9	73.5	24.3	73.5	24.8	73.5	25.5
	-3.0	-3.7	77.0	23.0	77.0	23.6	77.0	24.6	77.0	25.0	77.0	25.3	77.0	26.2
	0.0	-0.7	82.6	23.9	82.6	24.6	82.6	25.3	82.6	25.7	82.6	26.0	82.6	26.7
	3.0	2.2	87.9	24.6	87.9	25.3	87.9	26.0	87.9	26.2	87.9	26.7	87.9	27.4
	5.0	4.1	91.4	25.0	91.4	25.7	91.4	26.4	91.4	26.7	91.4	27.1	91.4	27.6
	7.0	6.0	95.0	25.5	95.0	26.2	95.0	26.7	95.0	27.1	95.0	27.4	95.0	28.1
	9.0	7.9	98.4	25.7	98.4	26.4	98.4	27.1	98.4	27.4	98.4	27.6	98.4	28.3
	11.0	9.8	101.9	26.2	101.9	26.7	101.9	27.4	101.9	27.6	101.9	28.1	101.9	28.5
	13.0	11.8	104.8	26.4	104.8	27.1	104.8	27.6	104.8	28.1	104.8	28.3	104.8	28.8
	15.0	13.7	109.2	26.9	109.1	27.4	109.1	27.8	109.1	28.3	109.1	28.5	107.6	28.5
	19.0	14.2	109.2	27.1	109.1	27.7	109.1	28.1	109.1	28.5	109.1	28.8	107.6	28.0
	21.0	15.0	109.2	27.3	109.1	27.9	109.1	28.4	109.1	28.7	109.1	28.3	107.6	27.7
120	-14.7	-15.0	56.1	19.5	56.1	20.5	56.1	21.4	56.1	21.9	56.1	22.4	56.1	23.4
	-12.6	-13.0	59.6	20.5	59.6	21.4	59.6	22.4	59.6	22.8	59.6	23.3	59.6	24.3
	-10.5	-11.0	63.4	21.4	63.4	22.3	63.4	23.2	63.4	23.6	63.4	24.1	63.4	25.0
	-9.5	-10.0	65.5	21.8	65.5	22.7	65.5	23.6	65.5	23.9	65.5	24.3	65.5	25.3
	-8.5	-9.1	67.0	22.2	67.0	23.0	67.0	23.9	67.0	24.3	67.0	24.8	67.0	25.5
	-7.0	-7.6	69.7	22.8	69.7	23.6	69.7	24.3	69.7	24.8	69.7	25.0	69.7	26.0
	-5.0	-5.6	73.5	23.4	73.5	24.1	73.5	25.0	73.5	25.3	73.5	25.7	73.5	26.4
	-3.0	-3.7	77.0	24.1	77.0	24.8	77.0	25.5	77.0	25.7	77.0	26.2	77.0	26.9
	0.0	-0.7	82.6	24.8	82.6	25.5	82.6	26.2	82.6	26.4	82.6	26.9	82.6	27.6
	3.0	2.2	87.9	25.5	87.9	26.2	87.9	26.9	87.9	27.1	87.9	27.4	87.9	28.1
	5.0	4.1	91.4	26.0	91.4	26.4	91.4	27.1	91.4	27.4	91.4	27.8	91.4	28.3
	7.0	6.0	95.0	26.2	95.0	26.9	95.0	27.6	95.0	27.8	95.0	28.1	95.0	28.8
	9.0	7.9	98.4	26.7	98.4	27.1	98.4	27.8	98.4	28.1	98.4	28.3	98.4	29.0
	11.0	9.8	101.9	26.9	101.9	27.6	101.9	28.1	101.9	28.3	101.9	28.5	99.4	28.1
	13.0	11.8	104.8	27.4	104.8	27.8	104.8	28.3	104.8	28.5	104.8	29.0	99.4	27.1
	15.0	13.7	109.1	27.6	109.1	28.1	109.1	28.5	109.1	28.8	106.6	28.3	99.4	26.0
	19.0	14.2	109.1	27.8	109.1	28.3	109.1	28.6	109.1	28.5	106.6	27.8	99.4	25.3
	21.0	15.0	109.1	28.1	109.1	28.5	109.1	28.7	109.1	28.3	106.6	27.0	99.4	24.9
110	-14.7	-15.0	56.1	20.9	56.1	21.8	56.1	22.7	56.1	23.2	56.1	23.6	56.1	24.6
	-12.6	-13.0	59.6	21.9	59.6	22.7	59.6	23.6	59.6	24.1	59.6	24.3	59.6	25.3
	-10.5	-11.0	63.4	22.7	63.4	23.4	63.4	24.3	63.4	24.8	63.4	25.0	63.4	26.0
	-9.5	-10.0	65.5	23.1	65.5	23.9	65.5	24.6	65.5	25.0	65.5	25.5	65.5	26.2
	-8.5	-9.1	67.0	23.4	67.0	24.1	67.0	25.0	67.0	25.3	67.0	25.7	67.0	26.4
	-7.0	-7.6	69.7	23.9	69.7	24.6	69.7	25.3	69.7	25.7	69.7	26.2	69.7	26.9
	-5.0	-5.6	73.5	24.6	73.5	25.3	73.5	26.0	73.5	26.2	73.5	26.7	73.5	27.4
	-3.0	-3.7	77.0	25.0	77.0	25.7	77.0	26.4	77.0	26.7	77.0	27.1	77.0	27.6
	0.0	-0.7	82.6	25.7	82.6	26.4	82.6	27.1	82.6	27.4	82.6	27.6	82.6	28.3
	3.0	2.2	87.9	26.4	87.9	27.1	87.9	27.6	87.9	27.8	87.9	28.3	87.9	28.8
	5.0	4.1	91.4	26.9	91.4	27.4	91.4	27.8	91.4	28.3	91.4	28.5	91.1	28.8
	7.0	6.0	95.0	27.1	95.0	27.6	95.0	28.3	95.0	28.5	95.0	28.8	91.1	27.6
	9.0	7.9	98.4	27.6	98.4	28.1	98.4	28.5	98.4	28.8	97.7	28.8	91.1	26.4
	11.0	9.8	101.9	27.8	101.9	28.3	101.9	28.8	101.1	28.8	97.7	27.6	91.1	25.5

heating

capacity factor(%)	outdoor temp.		indoor temp.℃WB											
			16.0		18.0		20.0		21.0		22.0		24.0	
			TC	PI	TC	PI	TC	PI	TC	PI	TC	PI	TC	PI
	℃DB	℃WB	KW	KW	KW	KW	KW	KW	KW	KW	KW	KW	KW	KW
	13.0	11.8	104.8	28.1	104.8	28.5	104.6	28.5	101.1	27.6	97.7	26.4	91.1	24.6
	15.0	13.7	109.2	28.3	109.2	28.8	104.6	27.6	101.1	26.7	97.7	25.5	91.1	23.6
	19.0	14.2	109.2	26.5	109.2	28.5	104.6	26.7	101.1	25.6	97.7	24.6	91.1	22.8
	21.0	15.0	109.2	26.7	109.2	27.7	104.6	25.3	101.1	24.8	97.7	23.9	91.1	22.5
100	-14.7	-15.0	56.1	22.4	56.1	23.2	56.1	24.1	56.1	24.3	56.1	24.8	56.1	25.7
	-12.6	-13.0	59.6	23.2	59.6	24.1	59.6	24.8	59.6	25.0	59.6	25.5	59.6	26.2
	-10.5	-11.0	63.4	24.1	63.4	24.8	63.4	25.5	63.4	25.7	63.4	26.2	63.4	26.9
	-9.5	-10.0	65.5	24.3	65.5	25.0	65.5	25.7	65.5	26.2	65.5	26.4	65.5	27.1
	-8.5	-9.1	67.0	24.6	67.0	25.3	67.0	26.0	67.0	26.4	67.0	26.7	67.0	27.4
	-7.0	-7.6	69.7	25.0	69.7	25.7	69.7	26.4	69.7	26.7	69.7	27.1	69.7	27.8
	-5.0	-5.6	73.5	25.7	73.5	26.2	73.5	26.9	73.5	27.1	73.5	27.6	73.5	28.1
	-3.0	-3.7	77.0	26.2	77.0	26.7	77.0	27.4	77.0	27.6	77.0	27.8	77.0	28.5
	0.0	-0.7	82.6	26.9	82.6	27.4	82.6	27.8	82.6	28.3	82.6	28.5	82.7	29.0
	3.0	2.2	87.9	27.4	87.9	27.8	87.9	28.5	87.9	28.8	87.9	29.0	82.9	27.1
	5.0	4.1	91.4	27.6	91.4	28.3	91.4	28.8	91.4	29.0	90.2	28.1	82.9	26.0
	7.0	6.0	95.0	28.1	95.0	28.5	95.0	29.0	92.0	27.8	88.9	26.9	82.9	24.8
	9.0	7.9	98.4	28.3	98.4	28.8	95.0	27.8	92.0	26.9	88.9	25.7	82.9	23.9
	11.0	9.8	101.9	28.5	101.1	28.8	95.0	26.7	92.0	25.7	88.9	24.8	82.9	22.9
	13.0	11.8	104.8	28.8	101.1	27.6	95.0	25.7	92.0	24.8	88.9	23.9	82.9	22.1
	15.0	13.7	107.1	28.3	101.1	26.7	95.0	24.8	92.0	23.9	88.9	23.0	82.9	21.3
	19.0	14.2	107.1	27.6	101.1	25.7	95.0	24.2	92.0	22.9	88.9	22.1	82.9	20.7
	21.0	15.0	107.1	26.7	101.1	24.6	95.0	23.3	92.0	22.5	88.9	21.5	82.9	20.3
90	-14.7	-15.0	56.1	23.9	56.1	24.6	56.1	25.3	56.1	25.7	56.1	26.0	56.1	26.7
	-12.6	-13.0	59.6	24.6	59.6	25.3	59.6	26.0	59.6	26.2	59.6	26.7	59.6	27.4
	-10.5	-11.0	63.4	25.3	63.4	26.0	63.4	26.7	63.4	26.9	63.4	27.1	63.4	27.8
	-9.5	-10.0	65.5	25.5	65.5	26.2	65.5	26.9	65.5	27.1	65.5	27.4	65.5	28.1
	-8.5	-9.1	67.0	25.7	67.0	26.4	67.0	27.1	67.0	27.4	67.0	27.6	67.0	28.3
	-7.0	-7.6	69.7	26.2	69.7	26.9	69.7	27.4	69.7	27.8	69.7	28.1	69.7	28.5
	-5.0	-5.6	73.5	26.7	73.5	27.4	73.5	27.8	73.5	28.1	73.5	28.5	73.5	29.0
	-3.0	-3.7	77.0	27.1	77.0	27.8	77.0	28.3	77.0	28.5	77.0	28.8	74.4	27.8
	0.0	-0.7	82.6	27.8	82.6	28.3	82.6	28.8	82.5	29.0	79.9	27.8	74.4	25.7
	3.0	2.2	87.9	28.3	87.9	28.8	85.6	28.1	82.6	27.1	79.9	26.0	74.4	24.1
	5.0	4.1	91.4	28.5	91.0	28.8	85.6	26.9	82.6	26.0	79.9	24.8	74.4	23.0
	7.0	6.0	95.0	28.8	91.0	27.6	85.6	25.7	82.6	24.8	79.9	23.9	74.4	22.1
	9.0	7.9	96.6	28.3	91.0	26.4	85.6	24.8	82.6	23.9	79.9	23.0	74.4	21.3
	11.0	9.8	96.6	27.1	91.0	25.5	85.6	23.9	82.6	22.9	79.9	22.1	74.4	20.5
	13.0	11.8	96.6	26.2	91.0	24.6	85.6	22.8	82.6	22.1	79.9	21.3	74.4	19.7
	15.0	13.7	96.6	25.3	91.0	23.6	85.6	22.1	82.6	21.3	79.9	20.6	74.4	19.1
	19.0	14.2	96.6	24.6	91.0	23.0	85.6	21.4	82.6	20.7	79.9	19.8	74.4	18.4
	21.0	15.0	96.6	23.7	91.0	22.1	85.6	21.0	82.6	20.0	79.9	19.1	74.4	17.6
80	-14.7	-15.0	56.1	25.3	56.1	26.0	56.1	26.7	56.1	26.9	56.1	27.1	56.1	27.8
	-12.6	-13.0	59.6	26.0	59.6	26.4	59.6	27.1	59.6	27.4	59.6	27.8	59.6	28.3
	-10.5	-11.0	63.4	26.4	63.4	27.1	63.4	27.6	63.4	28.1	63.4	28.3	63.4	28.8
	-9.5	-10.0	65.5	26.9	65.5	27.4	65.5	27.8	65.5	28.3	65.5	28.5	65.5	29.0
	-8.5	-9.1	67.0	27.1	67.0	27.6	67.0	28.1	67.0	28.5	67.0	28.8	66.1	28.5
	-7.0	-7.6	69.7	27.4	69.7	27.8	69.7	28.5	69.7	28.8	69.7	29.0	66.1	27.1
	-5.0	-5.6	73.5	27.8	73.5	28.3	73.5	28.8	73.4	29.0	71.1	27.8	66.1	25.7
	-3.0	-3.7	77.0	28.3	77.0	28.8	76.0	28.5	73.4	27.4	71.1	26.4	66.1	24.3
	0.0	-0.7	82.6	28.8	80.8	28.3	76.0	26.4	73.4	25.5	71.1	24.3	66.1	22.6
	3.0	2.2	85.8	28.1	80.8	26.4	76.0	24.6	73.4	23.6	71.1	22.8	66.1	21.1
	5.0	4.1	85.8	26.9	80.8	25.3	76.0	23.6	73.4	22.7	71.1	21.9	66.1	20.3
	7.0	6.0	85.8	25.7	80.8	24.1	76.0	22.6	73.4	21.8	71.1	21.0	66.1	19.5
	9.0	7.9	85.8	24.8	80.8	23.2	76.0	21.7	73.4	21.0	71.1	20.2	66.1	18.8
	11.0	9.8	85.8	23.9	80.8	22.4	76.0	20.9	73.4	20.2	71.1	19.5	66.1	18.1
	13.0	11.8	85.8	22.9	80.8	21.5	76.0	20.1	73.4	19.5	71.1	18.8	66.1	17.5
	15.0	13.7	85.8	22.1	80.8	20.6	76.0	19.5	73.4	18.8	71.1	18.2	66.1	16.9
	19.0	14.2	85.8	21.4	80.8	20.2	76.0	18.7	73.4	18.1	71.1	17.4	66.1	16.5
	21.0	15.0	85.8	20.8	80.8	19.3	76.0	18.2	73.4	17.5	71.1	16.8	66.1	15.6

heating

capacity factor(%)	outdoor temp.		indoor temp.℃WB											
			16.0		18.0		20.0		21.0		22.0		24.0	
			TC	PI	TC	PI	TC	PI	TC	PI	TC	PI	TC	PI
	℃DB	℃WB	KW	KW	KW	KW	KW	KW	KW	KW	KW	KW	KW	KW
70	-14.7	-15.0	56.1	26.7	56.1	27.4	56.1	27.8	56.1	28.1	56.1	28.3	56.1	29.0
	-12.6	-13.0	59.6	27.4	59.6	27.8	59.6	28.3	59.6	28.5	59.6	29.0	57.9	27.8
	-10.5	-11.0	63.4	27.8	63.4	28.3	63.4	28.8	63.4	29.0	62.2	28.1	57.9	26.0
	-9.5	-10.0	65.5	28.1	65.5	28.5	65.5	29.0	64.3	28.3	62.2	27.1	57.9	25.0
	-8.5	-9.1	67.0	28.3	67.0	28.8	66.6	28.5	64.3	27.6	62.2	26.4	57.9	24.6
	-7.0	-7.6	69.7	28.5	69.7	29.0	66.6	27.4	64.3	26.2	62.2	25.3	57.9	23.4
	-5.0	-5.6	73.5	29.0	70.7	27.6	66.6	25.7	64.3	24.8	62.2	23.9	57.9	22.1
	-3.0	-3.7	75.0	28.1	70.7	26.2	66.6	24.6	64.3	23.6	62.2	22.8	57.9	21.1
	0.0	-0.7	75.0	26.0	70.7	24.3	66.6	22.7	64.3	21.9	62.2	21.1	57.9	19.6
	3.0	2.2	75.0	24.3	70.7	22.7	66.6	21.2	64.3	20.5	62.2	19.8	57.9	18.4
	5.0	4.1	75.0	23.2	70.7	21.8	66.6	20.4	64.3	19.7	62.2	19.0	57.9	17.7
	7.0	6.0	75.0	22.3	70.7	20.9	66.6	19.6	64.3	18.9	62.2	18.3	57.9	17.0
	9.0	7.9	75.0	21.4	70.7	20.1	66.6	18.9	64.3	18.2	62.2	17.6	57.9	16.4
	11.0	9.8	75.0	20.6	70.7	19.4	66.6	18.2	64.3	17.6	62.2	16.9	57.9	15.8
	13.0	11.8	75.0	19.9	70.7	18.7	66.6	17.5	64.3	17.0	62.2	16.4	57.9	15.3
	15.0	13.7	75.0	19.2	70.7	18.1	66.6	17.0	64.3	16.4	62.2	15.9	57.9	14.8
	19.0	14.2	75.0	18.2	70.7	17.6	66.6	16.5	64.3	15.7	62.2	15.0	57.9	14.2
	21.0	15.0	75.0	17.6	70.7	16.7	66.6	15.8	64.3	14.9	62.2	14.2	57.9	13.4
60	-14.7	-15.0	56.1	28.1	56.1	28.5	56.1	29.0	55.1	28.1	53.4	27.1	49.6	25.0
	-12.6	-13.0	59.6	28.5	59.6	29.0	57.0	27.1	55.1	26.2	53.4	25.3	49.6	23.3
	-10.5	-11.0	63.4	29.0	60.5	27.4	57.0	25.5	55.1	24.6	53.4	23.6	49.6	21.9
	-9.5	-10.0	64.3	28.3	60.5	26.4	57.0	24.8	55.1	23.9	53.4	22.9	49.6	21.2
	-8.5	-9.1	64.3	27.6	60.5	25.7	57.0	24.1	55.1	23.2	53.4	22.3	49.6	20.7
	-7.0	-7.6	64.3	26.2	60.5	24.6	57.0	23.0	55.1	22.2	53.4	21.4	49.6	19.8
	-5.0	-5.6	64.3	24.8	60.5	23.3	57.0	21.8	55.1	21.0	53.4	20.3	49.6	18.8
	-3.0	-3.7	64.3	23.6	60.5	22.1	57.0	20.7	55.1	20.0	53.4	19.3	49.6	17.9
	0.0	-0.7	64.3	21.9	60.5	20.6	57.0	19.2	55.1	18.6	53.4	18.0	49.6	16.7
	3.0	2.2	64.3	20.5	60.5	19.2	57.0	18.1	55.1	17.5	53.4	16.9	49.6	15.7
	5.0	4.1	64.3	19.7	60.5	18.5	57.0	17.4	55.1	16.8	53.4	16.2	49.6	15.1
	7.0	6.0	64.3	18.9	60.5	17.8	57.0	16.7	55.1	16.2	53.4	15.6	49.6	14.6
	9.0	7.9	64.3	18.2	60.5	17.2	57.0	16.1	55.1	15.6	53.4	15.1	49.6	14.1
	11.0	9.8	64.3	17.6	60.5	16.6	57.0	15.6	55.1	15.1	53.4	14.6	49.6	13.7
	13.0	11.8	64.3	17.0	60.5	16.0	57.0	15.0	55.1	14.6	53.4	14.1	49.6	13.2
	15.0	13.7	64.3	16.4	60.5	15.5	57.0	14.6	55.1	14.1	53.4	13.7	49.6	12.8
	19.0	14.2	64.3	16.0	60.5	14.7	57.0	14.1	55.1	13.7	53.4	13.2	49.6	12.3
	21.0	15.0	64.3	15.3	60.5	14.3	57.0	13.5	55.1	13.2	53.4	12.7	49.6	11.8
50	-14.7	-15.0	53.5	27.1	50.4	25.5	47.5	23.9	45.9	23.0	44.4	22.1	41.3	20.5
	-12.6	-13.0	53.5	25.5	50.4	23.9	47.5	22.2	45.9	21.5	44.4	20.7	41.3	19.2
	-10.5	-11.0	53.5	23.9	50.4	22.3	47.5	20.9	45.9	20.2	44.4	19.5	41.3	18.1
	-9.5	-10.0	53.5	23.1	50.4	21.6	47.5	20.3	45.9	19.6	44.4	18.9	41.3	17.6
	-8.5	-9.1	53.5	22.5	50.4	21.1	47.5	19.7	45.9	19.1	44.4	18.4	41.3	17.1
	-7.0	-7.6	53.5	21.5	50.4	20.2	47.5	18.9	45.9	18.3	44.4	17.7	41.3	16.5
	-5.0	-5.6	53.5	20.4	50.4	19.2	47.5	18.0	45.9	17.4	44.4	16.8	41.3	15.6
	-3.0	-3.7	53.5	19.4	50.4	18.3	47.5	17.1	45.9	16.6	44.4	16.0	41.3	15.0
	0.0	-0.7	53.5	18.1	50.4	17.0	47.5	16.0	45.9	15.5	44.4	15.0	41.3	14.0
	3.0	2.2	53.5	17.0	50.4	16.0	47.5	15.1	45.9	14.6	44.4	14.1	41.3	13.2
	5.0	4.1	53.5	16.3	50.4	15.4	47.5	14.5	45.9	14.1	44.4	13.6	41.3	12.7
	7.0	6.0	53.5	15.7	50.4	14.9	47.5	14.0	45.9	13.6	44.4	13.1	41.3	12.3
	9.0	7.9	53.5	15.2	50.4	14.3	47.5	13.5	45.9	13.1	44.4	12.7	41.3	11.9
	11.0	9.8	53.5	14.7	50.4	13.9	47.5	13.1	45.9	12.7	44.4	12.3	41.3	11.6
	13.0	11.8	53.5	14.2	50.4	13.4	47.5	12.7	45.9	12.3	44.4	11.9	41.3	11.2
	15.0	13.7	53.5	13.8	50.4	13.0	47.5	12.3	45.9	12.0	44.4	11.6	41.3	10.9
	19.0	14.2	53.5	13.3	50.4	12.5	47.5	11.9	45.9	11.4	44.4	11.2	41.3	10.4
	21.0	15.0	53.5	12.4	50.4	12.2	47.5	11.6	45.9	10.9	44.4	10.8	41.3	10.0

13) 32HP capacity

heating

capacity factor(%)	outdoor temp.		indoor temp.℃WB											
			16.0		18.0		20.0		21.0		22.0		24.0	
			TC	PI	TC	PI	TC	PI	TC	PI	TC	PI	TC	PI
	℃DB	℃WB	KW	KW	KW	KW	KW	KW	KW	KW	KW	KW	KW	KW
130	-14.7	-15.0	58.6	18.7	58.6	19.8	58.6	20.9	58.6	21.4	58.6	22.0	58.6	23.1
	-12.6	-13.0	62.4	19.8	62.4	20.9	62.4	21.9	62.4	22.4	62.4	22.9	62.4	24.0
	-10.5	-11.0	66.4	20.8	66.4	21.8	66.4	22.8	66.4	23.3	66.4	23.8	66.4	24.7
	-9.5	-10.0	68.6	21.3	68.6	22.3	68.6	23.2	68.6	23.7	68.6	24.2	68.6	25.2
	-8.5	-9.1	70.2	21.7	70.2	22.6	70.2	23.6	70.2	24.0	70.2	24.4	70.2	25.4
	-7.0	-7.6	73.0	22.3	73.0	23.2	73.0	24.1	73.0	24.7	73.0	24.9	73.0	25.9
	-5.0	-5.6	77.0	23.1	77.0	23.9	77.0	24.7	77.0	25.2	77.0	25.6	77.0	26.4
	-3.0	-3.7	80.8	23.8	80.8	24.4	80.8	25.4	80.8	25.9	80.8	26.1	80.8	27.1
	0.0	-0.7	86.8	24.7	86.8	25.4	86.8	26.1	86.8	26.6	86.8	26.9	86.8	27.6
	3.0	2.2	92.4	25.4	92.4	26.1	92.4	26.9	92.4	27.1	92.4	27.6	92.4	28.3
	5.0	4.1	96.2	25.9	96.2	26.6	96.2	27.3	96.2	27.6	96.2	28.1	96.2	28.5
	7.0	6.0	100.0	26.4	100.0	27.1	100.0	27.6	100.0	28.1	100.0	28.3	100.0	29.0
	9.0	7.9	103.6	26.6	103.6	27.3	103.6	28.1	103.6	28.3	103.6	28.5	103.6	29.3
	11.0	9.8	107.4	27.1	107.4	27.6	107.4	28.3	107.4	28.5	107.4	29.0	107.4	29.5
	13.0	11.8	111.6	27.3	111.6	28.1	111.6	28.5	111.6	29.0	111.6	29.3	111.6	29.8
	15.0	13.7	115.2	27.8	115.0	28.3	115.0	28.8	115.0	29.3	115.0	29.5	113.2	29.5
	19.0	14.2	115.2	28.1	115.0	28.6	115.0	29.1	115.0	29.5	115.0	29.8	113.2	28.9
	21.0	15.0	115.2	28.3	115.0	28.9	115.0	29.3	115.0	29.7	115.0	29.3	113.2	28.6
120	-14.7	-15.0	58.6	20.2	58.6	21.2	58.6	22.2	58.6	22.7	58.6	23.2	58.6	24.2
	-12.6	-13.0	62.4	21.2	62.4	22.2	62.4	23.1	62.4	23.6	62.4	24.1	62.4	25.2
	-10.5	-11.0	66.4	22.2	66.4	23.1	66.4	24.0	66.4	24.4	66.4	24.9	66.4	25.9
	-9.5	-10.0	68.6	22.6	68.6	23.5	68.6	24.4	68.6	24.7	68.6	25.2	68.6	26.1
	-8.5	-9.1	70.2	23.0	70.2	23.8	70.2	24.7	70.2	25.2	70.2	25.6	70.2	26.4
	-7.0	-7.6	73.0	23.5	73.0	24.4	73.0	25.2	73.0	25.6	73.0	25.9	73.0	26.9
	-5.0	-5.6	77.0	24.2	77.0	24.9	77.0	25.9	77.0	26.1	77.0	26.6	77.0	27.3
	-3.0	-3.7	80.8	24.9	80.8	25.6	80.8	26.4	80.8	26.6	80.8	27.1	80.8	27.8
	0.0	-0.7	86.8	25.6	86.8	26.4	86.8	27.1	86.8	27.3	86.8	27.8	86.8	28.5
	3.0	2.2	92.4	26.4	92.4	27.1	92.4	27.8	92.4	28.1	92.4	28.3	92.4	29.0
	5.0	4.1	96.2	26.9	96.2	27.3	96.2	28.1	96.2	28.3	96.2	28.8	96.2	29.3
	7.0	6.0	100.0	27.1	100.0	27.8	100.0	28.5	100.0	28.8	100.0	29.0	100.0	29.8
	9.0	7.9	103.6	27.6	103.6	28.1	103.6	28.8	103.6	29.0	103.6	29.3	103.6	30.0
	11.0	9.8	107.4	27.8	107.4	28.5	107.4	29.0	107.4	29.3	107.4	29.5	104.6	29.0
	13.0	11.8	111.6	28.3	111.6	28.8	111.6	29.3	111.6	29.5	111.6	30.0	104.6	28.1
	15.0	13.7	115.0	28.5	115.0	29.0	115.0	29.5	115.0	29.8	112.2	29.3	104.6	26.9
	19.0	14.2	115.0	28.8	115.0	29.3	115.0	29.6	115.0	29.5	112.2	28.8	104.6	26.2
	21.0	15.0	115.0	29.1	115.0	29.5	115.0	29.7	115.0	29.3	112.2	27.9	104.6	25.7
110	-14.7	-15.0	58.6	21.6	58.6	22.6	58.6	23.5	58.6	24.0	58.6	24.4	58.6	25.4
	-12.6	-13.0	62.4	22.6	62.4	23.5	62.4	24.4	62.4	24.9	62.4	25.2	62.4	26.1
	-10.5	-11.0	66.4	23.5	66.4	24.2	66.4	25.2	66.4	25.6	66.4	25.9	66.4	26.9
	-9.5	-10.0	68.6	23.9	68.6	24.7	68.6	25.4	68.6	25.9	68.6	26.4	68.6	27.1
	-8.5	-9.1	70.2	24.2	70.2	24.9	70.2	25.9	70.2	26.1	70.2	26.6	70.2	27.3
	-7.0	-7.6	73.0	24.7	73.0	25.4	73.0	26.1	73.0	26.6	73.0	27.1	73.0	27.8
	-5.0	-5.6	77.0	25.4	77.0	26.1	77.0	26.9	77.0	27.1	77.0	27.6	77.0	28.3
	-3.0	-3.7	80.8	25.9	80.8	26.6	80.8	27.3	80.8	27.6	80.8	28.1	80.8	28.5
	0.0	-0.7	86.8	26.6	86.8	27.3	86.8	28.1	86.8	28.3	86.8	28.5	86.8	29.3
	3.0	2.2	92.4	27.3	92.4	28.1	92.4	28.5	92.4	28.8	92.4	29.3	92.4	29.8
	5.0	4.1	96.2	27.8	96.2	28.3	96.2	28.8	96.2	29.3	96.2	29.5	95.8	29.8
	7.0	6.0	100.0	28.1	100.0	28.5	100.0	29.3	100.0	29.5	100.0	29.8	95.8	28.5
	9.0	7.9	103.6	28.5	103.6	29.0	103.6	29.5	103.6	29.8	102.8	29.8	95.8	27.3
	11.0	9.8	107.4	28.8	107.4	29.3	107.4	29.8	106.4	29.8	102.8	28.5	95.8	26.4

heating

capacity factor(%)	outdoor temp.		indoor temp.℃WB											
			16.0		18.0		20.0		21.0		22.0		24.0	
			TC	PI	TC	PI	TC	PI	TC	PI	TC	PI	TC	PI
	℃DB	℃WB	KW	KW	KW	KW	KW	KW	KW	KW	KW	KW	KW	KW
	13.0	11.8	111.6	29.0	111.6	29.5	110.0	29.5	106.4	28.5	102.8	27.3	95.8	25.4
	15.0	13.7	115.2	29.3	115.2	29.8	110.0	28.5	106.4	27.6	102.8	26.4	95.8	24.4
	19.0	14.2	115.2	27.4	115.2	29.5	110.0	27.6	106.4	26.5	102.8	25.5	95.8	23.6
	21.0	15.0	115.2	27.6	115.2	28.6	110.0	26.1	106.4	25.7	102.8	24.8	95.8	23.3
100	-14.7	-15.0	58.6	23.1	58.6	24.0	58.6	24.9	58.6	25.2	58.6	25.6	58.6	26.6
	-12.6	-13.0	62.4	24.0	62.4	24.9	62.4	25.6	62.4	25.9	62.4	26.4	62.4	27.1
	-10.5	-11.0	66.4	24.9	66.4	25.6	66.4	26.4	66.4	26.6	66.4	27.1	66.4	27.8
	-9.5	-10.0	68.6	25.2	68.6	25.9	68.6	26.6	68.6	27.1	68.6	27.3	68.6	28.1
	-8.5	-9.1	70.2	25.4	70.2	26.1	70.2	26.9	70.2	27.3	70.2	27.6	70.2	28.3
	-7.0	-7.6	73.0	25.9	73.0	26.6	73.0	27.3	73.0	27.6	73.0	28.1	73.0	28.8
	-5.0	-5.6	77.0	26.6	77.0	27.1	77.0	27.8	77.0	28.1	77.0	28.5	77.0	29.0
	-3.0	-3.7	80.8	27.1	80.8	27.6	80.8	28.3	80.8	28.5	80.8	28.8	80.8	29.5
	0.0	-0.7	86.8	27.8	86.8	28.3	86.8	28.8	86.8	29.3	86.8	29.5	86.8	30.0
	3.0	2.2	92.4	28.3	92.4	28.8	92.4	29.5	92.4	29.8	92.4	30.0	87.2	28.1
	5.0	4.1	96.2	28.5	96.2	29.3	96.2	29.8	96.2	30.0	96.2	29.0	87.2	26.9
	7.0	6.0	100.0	29.0	100.0	29.5	100.0	30.0	96.8	28.8	93.6	27.8	87.2	25.6
	9.0	7.9	103.6	29.3	103.6	29.8	100.0	28.8	96.8	27.8	93.6	26.6	87.2	24.7
	11.0	9.8	107.4	29.5	106.4	29.8	100.0	27.6	96.8	26.6	93.6	25.6	87.2	23.7
	13.0	11.8	111.6	29.8	106.4	28.5	100.0	26.6	96.8	25.6	93.6	24.7	87.2	22.8
	15.0	13.7	112.8	29.3	106.4	27.6	100.0	25.6	96.8	24.7	93.6	23.8	87.2	22.0
	19.0	14.2	112.8	28.5	106.4	26.6	100.0	25.0	96.8	23.7	93.6	22.9	87.2	21.5
	21.0	15.0	112.8	27.6	106.4	25.5	100.0	24.1	96.8	23.3	93.6	22.2	87.2	21.0
90	-14.7	-15.0	58.6	24.7	58.6	25.4	58.6	26.1	58.6	26.6	58.6	26.9	58.6	27.6
	-12.6	-13.0	62.4	25.4	62.4	26.1	62.4	26.9	62.4	27.1	62.4	27.6	62.4	28.3
	-10.5	-11.0	66.4	26.1	66.4	26.9	66.4	27.6	66.4	27.8	66.4	28.1	66.4	28.8
	-9.5	-10.0	68.6	26.4	68.6	27.1	68.6	27.8	68.6	28.1	68.6	28.3	68.6	29.0
	-8.5	-9.1	70.2	26.6	70.2	27.3	70.2	28.1	70.2	28.3	70.2	28.5	70.2	29.3
	-7.0	-7.6	73.0	27.1	73.0	27.8	73.0	28.3	73.0	28.8	73.0	29.0	73.0	29.5
	-5.0	-5.6	77.0	27.6	77.0	28.3	77.0	28.8	77.0	29.0	77.0	29.5	77.0	30.0
	-3.0	-3.7	80.8	28.1	80.8	28.8	80.8	29.3	80.8	29.5	80.8	29.8	78.4	28.8
	0.0	-0.7	86.8	28.8	86.8	29.3	86.8	29.8	86.8	30.0	84.2	28.8	78.4	26.6
	3.0	2.2	92.4	29.3	92.4	29.8	90.0	29.0	87.0	28.1	84.2	26.9	78.4	24.9
	5.0	4.1	96.2	29.5	95.6	29.8	90.0	27.8	87.0	26.9	84.2	25.6	78.4	23.8
	7.0	6.0	100.0	29.8	95.6	28.5	90.0	26.6	87.0	25.6	84.2	24.7	78.4	22.9
	9.0	7.9	101.6	29.3	95.6	27.3	90.0	25.6	87.0	24.7	84.2	23.8	78.4	22.0
	11.0	9.8	101.6	28.1	95.6	26.4	90.0	24.7	87.0	23.7	84.2	22.9	78.4	21.2
	13.0	11.8	101.6	27.1	95.6	25.4	90.0	23.6	87.0	22.8	84.2	22.0	78.4	20.4
	15.0	13.7	101.6	26.1	95.6	24.4	90.0	22.8	87.0	22.0	84.2	21.3	78.4	19.7
	19.0	14.2	101.6	25.5	95.6	23.7	90.0	22.1	87.0	21.4	84.2	20.5	78.4	19.0
	21.0	15.0	101.6	24.6	95.6	22.9	90.0	21.7	87.0	20.7	84.2	19.8	78.4	18.2
80	-14.7	-15.0	58.6	26.1	58.6	26.9	58.6	27.6	58.6	27.8	58.6	28.1	58.6	28.8
	-12.6	-13.0	62.4	26.9	62.4	27.3	62.4	28.1	62.4	28.3	62.4	28.8	62.4	29.3
	-10.5	-11.0	66.4	27.3	66.4	28.1	66.4	28.5	66.4	29.0	66.4	29.3	66.4	29.8
	-9.5	-10.0	68.6	27.8	68.6	28.3	68.6	28.8	68.6	29.3	68.6	29.5	68.6	30.0
	-8.5	-9.1	70.2	28.1	70.2	28.5	70.2	29.0	70.2	29.5	70.2	29.8	69.6	29.5
	-7.0	-7.6	73.0	28.3	73.0	28.8	73.0	29.5	73.0	29.8	73.0	30.0	69.6	28.1
	-5.0	-5.6	77.0	28.8	77.0	29.3	77.0	29.8	77.2	30.0	74.8	28.8	69.6	26.6
	-3.0	-3.7	80.8	29.3	80.8	29.8	80.0	29.5	77.2	28.3	74.8	27.3	69.6	25.2
	0.0	-0.7	86.8	29.8	85.0	29.3	80.0	27.3	77.2	26.4	74.8	25.2	69.6	23.4
	3.0	2.2	90.2	29.0	85.0	27.3	80.0	25.4	77.2	24.4	74.8	23.6	69.6	21.9
	5.0	4.1	90.2	27.8	85.0	26.1	80.0	24.4	77.2	23.5	74.8	22.6	69.6	21.0
	7.0	6.0	90.2	26.6	85.0	24.9	80.0	23.3	77.2	22.5	74.8	21.8	69.6	20.2
	9.0	7.9	90.2	25.6	85.0	24.0	80.0	22.5	77.2	21.7	74.8	20.9	69.6	19.4
	11.0	9.8	90.2	24.7	85.0	23.1	80.0	21.6	77.2	20.9	74.8	20.2	69.6	18.7
	13.0	11.8	90.2	23.7	85.0	22.3	80.0	20.8	77.2	20.1	74.8	19.4	69.6	18.1
	15.0	13.7	90.2	22.9	85.0	21.3	80.0	20.1	77.2	19.5	74.8	18.8	69.6	17.5
	19.0	14.2	90.2	22.1	85.0	20.9	80.0	19.3	77.2	18.7	74.8	18.0	69.6	17.1
	21.0	15.0	90.2	21.5	85.0	20.0	80.0	18.8	77.2	18.1	74.8	17.4	69.6	16.2

heating

capacity factor(%)	outdoor temp.		indoor temp.℃WB											
			16.0		18.0		20.0		21.0		22.0		24.0	
			TC	PI	TC	PI	TC	PI	TC	PI	TC	PI	TC	PI
	℃DB	℃WB	KW	KW	KW	KW	KW	KW	KW	KW	KW	KW	KW	KW
70	-14.7	-15.0	58.6	27.6	58.6	28.3	58.6	28.8	58.6	29.0	58.6	29.3	58.6	30.0
	-12.6	-13.0	62.4	28.3	62.4	28.8	62.4	29.3	62.4	29.5	62.4	30.0	61.0	28.8
	-10.5	-11.0	66.4	28.8	66.4	29.3	66.4	29.8	66.4	30.0	65.4	29.0	61.0	26.9
	-9.5	-10.0	68.6	29.0	68.6	29.5	68.6	30.0	67.6	29.3	65.4	28.1	61.0	25.9
	-8.5	-9.1	70.2	29.3	70.2	29.8	70.0	29.5	67.6	28.5	65.4	27.3	61.0	25.4
	-7.0	-7.6	73.0	29.5	73.0	30.0	70.0	28.3	67.6	27.1	65.4	26.1	61.0	24.2
	-5.0	-5.6	77.0	30.0	74.4	28.5	70.0	26.6	67.6	25.6	65.4	24.7	61.0	22.9
	-3.0	-3.7	78.8	29.0	74.4	27.1	70.0	25.4	67.6	24.4	65.4	23.5	61.0	21.8
	0.0	-0.7	78.8	26.9	74.4	25.2	70.0	23.5	67.6	22.7	65.4	21.8	61.0	20.3
	3.0	2.2	78.8	25.2	74.4	23.5	70.0	21.9	67.6	21.2	65.4	20.5	61.0	19.0
	5.0	4.1	78.8	24.0	74.4	22.5	70.0	21.1	67.6	20.3	65.4	19.6	61.0	18.3
	7.0	6.0	78.8	23.0	74.4	21.6	70.0	20.3	67.6	19.6	65.4	18.9	61.0	17.6
	9.0	7.9	78.8	22.2	74.4	20.8	70.0	19.5	67.6	18.8	65.4	18.2	61.0	17.0
	11.0	9.8	78.8	21.3	74.4	20.1	70.0	18.8	67.6	18.2	65.4	17.4	61.0	16.4
	13.0	11.8	78.8	20.6	74.4	19.3	70.0	18.1	67.6	17.6	65.4	17.0	61.0	15.8
	15.0	13.7	78.8	19.9	74.4	18.7	70.0	17.6	67.6	17.0	65.4	16.4	61.0	15.3
	19.0	14.2	78.8	18.9	74.4	18.2	70.0	17.1	67.6	16.2	65.4	15.5	61.0	14.7
	21.0	15.0	78.8	18.2	74.4	17.3	70.0	16.3	67.6	15.5	65.4	14.7	61.0	13.9
60	-14.7	-15.0	58.6	29.0	58.6	29.5	58.6	30.0	58.0	29.0	56.2	28.1	52.2	25.9
	-12.6	-13.0	62.4	29.5	62.4	30.0	60.0	28.1	58.0	27.1	56.2	26.1	52.2	24.1
	-10.5	-11.0	66.4	30.0	63.6	28.3	60.0	26.4	58.0	25.4	56.2	24.4	52.2	22.6
	-9.5	-10.0	67.6	29.3	63.6	27.3	60.0	25.6	58.0	24.7	56.2	23.7	52.2	22.0
	-8.5	-9.1	67.6	28.5	63.6	26.6	60.0	24.9	58.0	24.0	56.2	23.1	52.2	21.4
	-7.0	-7.6	67.6	27.1	63.6	25.4	60.0	23.8	58.0	22.9	56.2	22.1	52.2	20.5
	-5.0	-5.6	67.6	25.6	63.6	24.1	60.0	22.5	58.0	21.7	56.2	21.0	52.2	19.5
	-3.0	-3.7	67.6	24.4	63.6	22.9	60.0	21.4	58.0	20.7	56.2	20.0	52.2	18.6
	0.0	-0.7	67.6	22.6	63.6	21.3	60.0	19.9	58.0	19.3	56.2	18.6	52.2	17.3
	3.0	2.2	67.6	21.2	63.6	19.9	60.0	18.7	58.0	18.1	56.2	17.5	52.2	16.3
	5.0	4.1	67.6	20.3	63.6	19.1	60.0	18.0	58.0	17.4	56.2	16.8	52.2	15.7
	7.0	6.0	67.6	19.5	63.6	18.4	60.0	17.3	58.0	16.7	56.2	16.2	52.2	15.1
	9.0	7.9	67.6	18.8	63.6	17.8	60.0	16.7	58.0	16.2	56.2	15.6	52.2	14.6
	11.0	9.8	67.6	18.2	63.6	17.1	60.0	16.1	58.0	15.6	56.2	15.1	52.2	14.1
	13.0	11.8	67.6	17.5	63.6	16.5	60.0	15.6	58.0	15.1	56.2	14.6	52.2	13.7
	15.0	13.7	67.6	17.0	63.6	16.0	60.0	15.1	58.0	14.6	56.2	14.2	52.2	13.3
	19.0	14.2	67.6	16.5	63.6	15.2	60.0	14.6	58.0	14.2	56.2	13.6	52.2	12.7
	21.0	15.0	67.6	15.8	63.6	14.8	60.0	14.0	58.0	13.7	56.2	13.2	52.2	12.2
50	-14.7	-15.0	56.4	28.1	53.0	26.4	50.0	24.7	48.4	23.8	46.8	22.9	43.4	21.2
	-12.6	-13.0	56.4	26.4	53.0	24.7	50.0	23.0	48.4	22.2	46.8	21.4	43.4	19.9
	-10.5	-11.0	56.4	24.7	53.0	23.1	50.0	21.6	48.4	20.9	46.8	20.1	43.4	18.7
	-9.5	-10.0	56.4	23.9	53.0	22.4	50.0	21.0	48.4	20.3	46.8	19.5	43.4	18.2
	-8.5	-9.1	56.4	23.2	53.0	21.8	50.0	20.4	48.4	19.7	46.8	19.0	43.4	17.7
	-7.0	-7.6	56.4	22.3	53.0	20.9	50.0	19.6	48.4	18.9	46.8	18.3	43.4	17.0
	-5.0	-5.6	56.4	21.1	53.0	19.8	50.0	18.6	48.4	18.0	46.8	17.4	43.4	16.2
	-3.0	-3.7	56.4	20.1	53.0	18.9	50.0	17.7	48.4	17.2	46.8	16.6	43.4	15.5
	0.0	-0.7	56.4	18.7	53.0	17.6	50.0	16.5	48.4	16.0	46.8	15.5	43.4	14.5
	3.0	2.2	56.4	17.5	53.0	16.5	50.0	15.6	48.4	15.1	46.8	14.6	43.4	13.7
	5.0	4.1	56.4	16.9	53.0	15.9	50.0	15.0	48.4	14.5	46.8	14.3	43.4	13.2
	7.0	6.0	56.4	16.3	53.0	15.4	50.0	14.5	48.4	14.0	46.8	13.6	43.4	12.8
	9.0	7.9	56.4	15.7	53.0	14.8	50.0	14.0	48.4	13.6	46.8	13.2	43.4	12.3
	11.0	9.8	56.4	15.2	53.0	14.3	50.0	13.5	48.4	13.1	46.8	12.8	43.4	12.0
	13.0	11.8	56.4	14.7	53.0	13.9	50.0	13.1	48.4	12.7	46.8	12.3	43.4	11.6
	15.0	13.7	56.4	14.2	53.0	13.5	50.0	12.7	48.4	12.4	46.8	12.0	43.4	11.3
	19.0	14.2	56.4	13.8	53.0	12.9	50.0	12.3	48.4	11.8	46.8	11.6	43.4	10.8
	21.0	15.0	56.4	12.9	53.0	12.6	50.0	12.0	48.4	11.3	46.8	11.1	43.4	10.4

14) 34HP capacity

heating

capacity factor(%)	outdoor temp.		indoor temp.℃WB											
			16.0		18.0		20.0		21.0		22.0		24.0	
			TC	PI	TC	PI	TC	PI	TC	PI	TC	PI	TC	PI
	℃DB	℃WB	KW	KW	KW	KW	KW	KW	KW	KW	KW	KW	KW	KW
130	-14.7	-15.0	67.0	20.6	67.0	21.9	67.0	23.1	66.8	23.7	66.8	24.3	66.8	25.5
	-12.6	-13.0	70.6	21.9	70.6	23.1	70.6	24.2	70.6	24.8	70.6	25.4	70.6	26.5
	-10.5	-11.0	74.6	23.1	74.6	24.2	74.6	25.2	74.6	25.8	74.6	26.3	74.6	27.3
	-9.5	-10.0	76.8	23.6	76.8	24.6	76.8	25.7	76.8	26.2	76.8	26.7	76.8	27.8
	-8.5	-9.1	78.5	24.0	78.5	25.1	78.5	26.1	78.5	26.6	78.5	27.0	78.5	28.1
	-7.0	-7.6	81.6	24.7	81.6	25.7	81.6	26.7	81.6	27.3	81.6	27.6	81.6	28.6
	-5.0	-5.6	85.4	25.5	85.4	26.5	85.4	27.3	85.4	27.8	85.4	28.4	85.4	29.2
	-3.0	-3.7	89.0	26.3	89.0	27.0	89.0	28.1	89.0	28.6	89.0	28.9	89.0	30.0
	0.0	-0.7	95.0	27.3	95.0	28.1	95.0	28.9	95.0	29.5	95.0	29.7	95.0	30.5
	3.0	2.2	100.3	28.1	100.3	28.9	100.3	29.7	100.3	30.0	100.3	30.5	100.3	31.3
	5.0	4.1	104.3	28.6	104.3	29.5	104.3	30.3	104.3	30.5	104.3	31.1	104.3	31.6
	7.0	6.0	108.0	29.2	108.0	30.0	108.0	30.5	108.0	31.1	108.0	31.3	108.0	32.1
	9.0	7.9	111.8	29.5	111.6	30.3	111.6	31.1	111.6	31.3	111.6	31.6	111.6	32.4
	11.0	9.8	115.4	30.0	115.4	30.5	115.4	31.3	115.4	31.6	115.4	32.1	115.4	32.7
	13.0	11.8	118.4	30.3	118.4	31.1	118.4	31.6	118.4	32.1	118.4	32.4	118.4	32.9
	15.0	13.7	123.0	30.8	123.0	31.3	123.0	31.9	123.0	32.4	123.0	32.7	122.4	32.7
	19.0	14.2	123.0	31.1	123.0	31.7	123.0	32.2	123.0	32.7	123.0	33.0	122.4	32.0
	21.0	15.0	123.0	31.3	123.0	32.0	123.0	32.5	123.0	32.9	123.0	32.4	122.4	31.7
120	-14.7	-15.0	67.0	22.3	66.8	23.4	66.8	24.6	66.8	25.1	66.8	25.7	66.8	26.8
	-12.6	-13.0	70.6	23.5	70.6	24.5	70.6	25.6	70.6	26.1	70.6	26.7	70.6	27.8
	-10.5	-11.0	74.6	24.5	74.6	25.5	74.6	26.5	74.6	27.0	74.6	27.6	74.6	28.6
	-9.5	-10.0	76.8	25.0	76.8	26.0	76.8	27.0	76.8	27.3	76.8	27.8	76.8	28.9
	-8.5	-9.1	78.5	25.4	78.5	26.3	78.5	27.3	78.5	27.8	78.5	28.4	78.5	29.2
	-7.0	-7.6	81.6	26.1	81.6	27.0	81.6	27.8	81.6	28.4	81.6	28.6	81.6	29.7
	-5.0	-5.6	85.4	26.8	85.4	27.6	85.4	28.6	85.4	28.9	85.4	29.5	85.4	30.3
	-3.0	-3.7	89.0	27.6	89.0	28.4	89.0	29.2	89.0	29.5	89.0	30.0	89.0	30.8
	0.0	-0.7	95.0	28.4	95.0	29.2	95.0	30.0	95.0	30.3	95.0	30.8	95.0	31.6
	3.0	2.2	100.3	29.2	100.3	30.0	100.3	30.8	100.3	31.1	100.3	31.3	100.3	32.1
	5.0	4.1	104.3	29.7	104.3	30.3	104.3	31.1	104.3	31.3	104.3	31.9	104.3	32.4
	7.0	6.0	108.0	30.0	108.0	30.8	108.0	31.6	108.0	31.9	108.0	32.1	108.0	32.9
	9.0	7.9	111.6	30.5	111.6	31.1	111.6	31.9	111.6	32.1	111.6	32.4	111.6	33.2
	11.0	9.8	115.4	30.8	115.4	31.6	115.4	32.1	115.4	32.4	115.4	32.7	112.9	32.1
	13.0	11.8	118.4	31.3	118.4	31.9	118.4	32.4	118.4	32.7	118.4	33.2	112.9	31.1
	15.0	13.7	123.0	31.6	123.0	32.1	123.0	32.7	123.0	32.9	121.9	32.4	112.9	29.7
	19.0	14.2	123.0	31.8	123.0	32.4	123.0	32.7	123.0	32.6	121.9	31.8	112.9	29.0
	21.0	15.0	123.0	32.2	123.0	32.7	123.0	32.9	123.0	32.4	121.9	30.9	112.9	28.5
110	-14.7	-15.0	66.8	23.9	66.8	25.0	66.8	26.0	66.8	26.5	66.8	27.0	66.8	28.1
	-12.6	-13.0	70.6	25.0	70.6	26.0	70.6	27.0	70.6	27.6	70.6	27.8	70.6	28.9
	-10.5	-11.0	74.6	26.0	74.6	26.8	74.6	27.8	74.6	28.4	74.6	28.6	74.6	29.7
	-9.5	-10.0	76.8	26.4	76.8	27.3	76.8	28.1	76.8	28.6	76.8	29.2	76.8	30.0
	-8.5	-9.1	78.5	26.8	78.5	27.6	78.5	28.6	78.5	28.9	78.5	29.5	78.5	30.3
	-7.0	-7.6	81.6	27.3	81.6	28.1	81.6	28.9	81.6	29.5	81.6	30.0	81.6	30.8
	-5.0	-5.6	85.4	28.1	85.4	28.9	85.4	29.7	85.4	30.0	85.4	30.5	85.4	31.3
	-3.0	-3.7	89.0	28.6	89.0	29.5	89.0	30.3	89.0	30.5	89.0	31.1	89.0	31.6
	0.0	-0.7	95.0	29.5	94.8	30.3	94.8	31.1	94.8	31.3	94.8	31.6	94.8	32.4
	3.0	2.2	100.3	30.3	100.3	31.1	100.3	31.6	100.3	31.9	100.3	32.4	100.3	32.9
	5.0	4.1	104.3	30.8	104.3	31.3	104.3	31.9	104.3	32.4	104.3	32.7	103.6	32.9
	7.0	6.0	108.0	31.1	108.0	31.6	108.0	32.4	108.0	32.7	108.0	32.9	103.6	31.6
	9.0	7.9	111.6	31.6	111.6	32.1	111.6	32.7	111.6	32.9	110.9	32.9	103.6	30.3
	11.0	9.8	115.4	31.9	115.4	32.4	115.4	32.9	114.9	32.9	110.9	31.6	103.6	29.2

heating

capacity factor(%)	outdoor temp.		indoor temp.℃WB											
			16.0		18.0		20.0		21.0		22.0		24.0	
			TC	PI	TC	PI	TC	PI	TC	PI	TC	PI	TC	PI
	℃DB	℃WB	KW	KW	KW	KW	KW	KW	KW	KW	KW	KW	KW	KW
110	13.0	11.8	118.4	32.1	118.4	32.7	119.0	32.7	114.9	31.6	110.9	30.3	103.6	28.1
	15.0	13.7	123.0	32.4	123.0	32.9	119.0	31.6	114.9	30.5	110.9	29.2	103.6	27.0
	19.0	14.2	123.0	30.3	123.0	32.6	119.0	30.6	114.9	29.3	110.9	28.2	103.6	26.2
	21.0	15.0	123.0	30.5	123.0	31.7	119.0	28.9	114.9	28.4	110.9	27.4	103.6	25.8
100	-14.7	-15.0	66.8	25.6	66.8	26.5	66.8	27.6	66.8	27.8	66.8	28.4	66.8	29.5
	-12.6	-13.0	70.6	26.6	70.6	27.6	70.6	28.4	70.6	28.6	70.6	29.2	70.6	30.0
	-10.5	-11.0	74.6	27.6	74.6	28.4	74.6	29.2	74.6	29.5	74.6	30.0	74.6	30.8
	-9.5	-10.0	76.8	27.8	76.8	28.6	76.8	29.5	76.8	30.0	76.8	30.3	76.8	31.1
	-8.5	-9.1	78.5	28.1	78.5	28.9	78.5	29.7	78.5	30.3	78.5	30.5	78.5	31.3
	-7.0	-7.6	81.6	28.6	81.6	29.5	81.6	30.3	81.6	30.5	81.6	31.1	81.6	31.9
	-5.0	-5.6	85.4	29.5	85.4	30.0	85.4	30.8	85.4	31.1	85.4	31.6	85.4	32.1
	-3.0	-3.7	89.0	30.0	89.0	30.5	89.0	31.3	89.0	31.6	89.0	31.9	89.0	32.7
	0.0	-0.7	94.8	30.8	94.8	31.3	94.8	31.9	94.8	32.4	94.8	32.7	94.3	33.2
	3.0	2.2	100.3	31.3	100.3	31.9	100.3	32.7	100.3	32.9	100.3	33.2	94.3	31.1
	5.0	4.1	104.3	31.6	104.3	32.4	104.3	32.9	104.3	33.2	101.1	32.1	94.3	29.7
	7.0	6.0	108.0	32.1	108.0	32.7	108.0	33.2	104.6	31.9	101.1	30.8	94.3	28.4
	9.0	7.9	111.6	32.4	111.6	32.9	108.0	31.9	104.6	30.8	101.1	29.5	94.3	27.3
	11.0	9.8	115.4	32.7	114.9	32.9	108.0	30.5	104.6	29.5	101.1	28.4	94.3	26.3
	13.0	11.8	118.4	32.9	114.9	31.6	108.0	29.5	104.6	28.4	101.1	27.3	94.3	25.3
	15.0	13.7	121.7	32.4	114.9	30.5	108.0	28.4	104.6	27.3	101.1	26.3	94.3	24.4
	19.0	14.2	121.7	31.5	114.9	29.5	108.0	27.7	104.6	26.2	101.1	25.3	94.3	23.7
	21.0	15.0	121.7	30.5	114.9	28.2	108.0	26.6	104.6	25.8	101.1	24.6	94.3	23.2
90	-14.7	-15.0	66.8	27.3	66.8	28.1	66.8	28.9	66.8	29.5	66.8	29.7	66.8	30.5
	-12.6	-13.0	70.6	28.1	70.6	28.9	70.6	29.7	70.6	30.0	70.6	30.5	70.6	31.3
	-10.5	-11.0	74.6	28.9	74.6	29.7	74.6	30.5	74.6	30.8	74.6	31.1	74.6	31.9
	-9.5	-10.0	76.8	29.2	76.8	30.0	76.8	30.8	76.8	31.1	76.8	31.3	76.8	32.1
	-8.5	-9.1	78.5	29.5	78.5	30.3	78.5	31.1	78.5	31.3	78.5	31.6	78.5	32.4
	-7.0	-7.6	81.6	30.0	81.6	30.8	81.6	31.3	81.6	31.9	81.6	32.1	81.4	32.7
	-5.0	-5.6	85.4	30.5	85.4	31.3	85.4	31.9	85.4	32.1	85.4	32.7	84.2	33.2
	-3.0	-3.7	89.0	31.1	89.0	31.9	89.0	32.4	89.0	32.7	89.0	32.9	84.4	31.9
	0.0	-0.7	94.8	31.9	94.8	32.4	94.8	32.9	93.7	33.2	90.8	31.9	84.4	29.5
	3.0	2.2	100.3	32.4	100.3	32.9	97.2	32.1	93.7	31.1	90.8	29.7	84.4	27.6
	5.0	4.1	104.3	32.7	103.8	32.9	97.2	30.8	93.7	29.7	90.8	28.4	84.4	26.3
	7.0	6.0	108.0	32.9	103.8	31.6	97.2	29.5	93.7	28.4	90.8	27.3	84.4	25.3
	9.0	7.9	109.8	32.4	103.8	30.3	97.2	28.4	93.7	27.3	90.8	26.3	84.4	24.3
	11.0	9.8	109.8	31.1	103.8	29.2	97.2	27.3	93.7	26.2	90.8	25.3	84.4	23.5
	13.0	11.8	109.8	30.0	103.8	28.1	97.2	26.2	93.7	25.2	90.8	24.4	84.4	22.6
	15.0	13.7	109.8	28.9	103.8	27.0	97.2	25.2	93.7	24.4	90.8	23.5	84.4	21.8
	19.0	14.2	109.8	28.2	103.8	26.3	97.2	24.4	93.7	23.7	90.8	22.7	84.4	21.0
	21.0	15.0	109.8	27.2	103.8	25.3	97.2	24.0	93.7	22.9	90.8	21.9	84.4	20.2
80	-14.7	-15.0	66.8	28.9	66.8	29.7	66.8	30.5	66.8	30.8	66.8	31.1	66.8	31.9
	-12.6	-13.0	70.6	29.7	70.6	30.3	70.6	31.1	70.6	31.3	70.6	31.9	70.6	32.4
	-10.5	-11.0	74.6	30.3	74.6	31.1	74.6	31.6	74.6	32.1	74.6	32.4	74.2	32.9
	-9.5	-10.0	76.8	30.8	76.8	31.3	76.8	31.9	76.8	32.4	76.8	32.7	75.2	33.2
	-8.5	-9.1	78.5	31.1	78.5	31.6	78.5	32.1	78.5	32.7	78.5	32.9	75.3	32.7
	-7.0	-7.6	81.6	31.3	81.6	31.9	81.4	32.7	81.4	32.9	80.4	33.2	75.3	31.1
	-5.0	-5.6	85.4	31.9	85.4	32.4	85.4	32.9	83.4	33.2	80.9	31.9	75.3	29.5
	-3.0	-3.7	89.0	32.4	89.0	32.9	86.4	32.7	83.4	31.3	80.9	30.3	75.3	27.8
	0.0	-0.7	94.8	32.9	91.9	32.4	86.4	30.3	83.4	29.2	80.9	27.8	75.3	25.9
	3.0	2.2	97.3	32.1	91.9	30.3	86.4	28.1	83.4	27.0	80.9	26.1	75.3	24.2
	5.0	4.1	97.3	30.8	91.9	28.9	86.4	27.0	83.4	26.0	80.9	25.0	75.3	23.2
	7.0	6.0	97.3	29.5	91.9	27.6	86.4	25.8	83.4	25.0	80.9	24.1	75.3	22.3
	9.0	7.9	97.3	28.4	91.9	26.6	86.4	24.8	83.4	24.0	80.9	23.2	75.3	21.5
	11.0	9.8	97.3	27.3	91.9	25.6	86.4	23.9	83.4	23.1	80.9	22.3	75.3	20.7
	13.0	11.8	97.3	26.3	91.9	24.6	86.4	23.1	83.4	22.3	80.9	21.5	75.3	20.0
	15.0	13.7	97.3	25.4	91.9	23.6	86.4	22.3	83.4	21.5	80.9	20.8	75.3	19.4
	19.0	14.2	97.3	24.5	91.9	23.1	86.4	21.4	83.4	20.7	80.9	19.9	75.3	18.9
	21.0	15.0	97.3	23.8	91.9	22.1	86.4	20.8	83.4	20.1	80.9	19.2	75.3	17.9

heating

capacity factor(%)	outdoor temp.		indoor temp.℃WB											
			16.0		18.0		20.0		21.0		22.0		24.0	
			TC	PI	TC	PI	TC	PI	TC	PI	TC	PI	TC	PI
	℃DB	℃WB	KW	KW	KW	KW	KW	KW	KW	KW	KW	KW	KW	KW
70	-14.7	-15.0	66.8	30.5	66.8	31.3	66.8	31.9	66.8	32.1	66.8	32.4	65.2	33.2
	-12.6	-13.0	70.6	31.3	70.6	31.9	70.6	32.4	70.6	32.7	69.6	33.2	65.8	31.9
	-10.5	-11.0	74.6	31.9	74.6	32.4	74.4	32.9	72.8	33.2	70.7	32.1	65.8	29.7
	-9.5	-10.0	76.8	32.1	76.8	32.7	75.4	33.2	73.1	32.4	70.7	31.1	65.8	28.6
	-8.5	-9.1	78.5	32.4	78.5	32.9	75.8	32.7	73.1	31.6	70.7	30.3	65.8	28.1
	-7.0	-7.6	81.4	32.7	80.2	33.2	75.8	31.3	73.1	30.0	70.7	28.9	65.8	26.8
	-5.0	-5.6	84.8	33.2	80.5	31.6	75.8	29.5	73.1	28.4	70.7	27.3	65.8	25.4
	-3.0	-3.7	85.4	32.1	80.5	30.0	75.8	28.1	73.1	27.0	70.7	26.1	65.8	24.1
	0.0	-0.7	85.4	29.7	80.5	27.8	75.8	26.0	73.1	25.1	70.7	24.2	65.8	22.4
	3.0	2.2	85.4	27.8	80.5	26.0	75.8	24.3	73.1	23.5	70.7	22.7	65.8	21.0
	5.0	4.1	85.4	26.6	80.5	24.9	75.8	23.3	73.1	22.5	70.7	21.7	65.8	20.2
	7.0	6.0	85.4	25.5	80.5	23.9	75.8	22.4	73.1	21.7	70.7	20.9	65.8	19.5
	9.0	7.9	85.4	24.5	80.5	23.0	75.8	21.6	73.1	20.9	70.7	20.2	65.8	18.8
	11.0	9.8	85.4	23.6	80.5	22.2	75.8	20.8	73.1	20.1	70.7	19.3	65.8	18.1
	13.0	11.8	85.4	22.8	80.5	21.4	75.8	20.1	73.1	19.4	70.7	18.8	65.8	17.5
	15.0	13.7	85.4	22.0	80.5	20.7	75.8	19.4	73.1	18.8	70.7	18.2	65.8	17.0
	19.0	14.2	85.4	20.9	80.5	20.1	75.8	18.9	73.1	17.9	70.7	17.1	65.8	16.3
	21.0	15.0	85.4	20.1	80.5	19.1	75.8	18.0	73.1	17.1	70.7	16.3	65.8	15.4
60	-14.7	-15.0	66.8	32.1	66.8	32.7	64.6	33.2	62.7	32.1	60.7	31.1	56.5	28.6
	-12.6	-13.0	70.6	32.7	68.6	33.2	64.8	31.1	62.7	30.0	60.7	28.9	56.5	26.7
	-10.5	-11.0	72.8	33.2	68.9	31.3	64.8	29.2	62.7	28.1	60.7	27.0	56.5	25.1
	-9.5	-10.0	73.1	32.4	68.9	30.3	64.8	28.4	62.7	27.3	60.7	26.3	56.5	24.3
	-8.5	-9.1	73.1	31.6	68.9	29.5	64.8	27.6	62.7	26.5	60.7	25.6	56.5	23.7
	-7.0	-7.6	73.1	30.0	68.9	28.1	64.8	26.3	62.7	25.4	60.7	24.5	56.5	22.7
	-5.0	-5.6	73.1	28.4	68.9	26.6	64.8	24.9	62.7	24.0	60.7	23.2	56.5	21.5
	-3.0	-3.7	73.1	27.0	68.9	25.3	64.8	23.7	62.7	22.9	60.7	22.1	56.5	20.5
	0.0	-0.7	73.1	25.1	68.9	23.5	64.8	22.0	62.7	21.3	60.7	20.6	56.5	19.1
	3.0	2.2	73.1	23.5	68.9	22.0	64.8	20.7	62.7	20.0	60.7	19.3	56.5	18.0
	5.0	4.1	73.1	22.5	68.9	21.2	64.8	19.9	62.7	19.2	60.7	18.6	56.5	17.3
	7.0	6.0	73.1	21.6	68.9	20.4	64.8	19.1	62.7	18.5	60.7	17.9	56.5	16.7
	9.0	7.9	73.1	20.9	68.9	19.7	64.8	18.4	62.7	17.9	60.7	17.3	56.5	16.1
	11.0	9.8	73.1	20.1	68.9	19.0	64.8	17.8	62.7	17.3	60.7	16.7	56.5	15.6
	13.0	11.8	73.1	19.4	68.9	18.3	64.8	17.2	62.7	16.7	60.7	16.2	56.5	15.1
	15.0	13.7	73.1	18.8	68.9	17.7	64.8	16.7	62.7	16.2	60.7	15.7	56.5	14.7
	19.0	14.2	73.1	18.3	68.9	16.9	64.8	16.2	62.7	15.7	60.7	15.1	56.5	14.0
	21.0	15.0	73.1	17.5	68.9	16.4	64.8	15.5	62.7	15.2	60.7	14.6	56.5	13.5
50	-14.7	-15.0	60.9	31.1	57.5	29.2	54.1	27.3	52.1	26.3	50.4	25.3	47.0	23.5
	-12.6	-13.0	60.9	29.2	57.5	27.3	54.1	25.4	52.1	24.6	50.4	23.7	47.0	22.0
	-10.5	-11.0	60.9	27.3	57.5	25.5	54.1	23.9	52.1	23.1	50.4	22.3	47.0	20.7
	-9.5	-10.0	60.9	26.4	57.5	24.8	54.1	23.2	52.1	22.4	50.4	21.6	47.0	20.1
	-8.5	-9.1	60.9	25.7	57.5	24.1	54.1	22.6	52.1	21.8	50.4	21.1	47.0	19.6
	-7.0	-7.6	60.9	24.6	57.5	23.1	54.1	21.7	52.1	20.9	50.4	20.2	47.0	18.8
	-5.0	-5.6	60.9	23.3	57.5	21.9	54.1	20.6	52.1	19.9	50.4	19.2	47.0	17.9
	-3.0	-3.7	60.9	22.2	57.5	20.9	54.1	19.6	52.1	19.0	50.4	18.4	47.0	17.1
	0.0	-0.7	60.9	20.7	57.5	19.5	54.1	18.3	52.1	17.8	50.4	17.2	47.0	16.0
	3.0	2.2	60.9	19.4	57.5	18.3	54.1	17.2	52.1	16.7	50.4	16.2	47.0	15.1
	5.0	4.1	60.9	18.7	57.5	17.6	54.1	16.6	52.1	16.1	50.4	15.3	47.0	14.6
	7.0	6.0	60.9	18.0	57.5	17.0	54.1	16.0	52.1	15.5	50.4	15.0	47.0	14.1
	9.0	7.9	60.9	17.4	57.5	16.4	54.1	15.5	52.1	15.0	50.4	14.6	47.0	13.7
	11.0	9.8	60.9	16.8	57.5	15.9	54.1	15.0	52.1	14.5	50.4	14.1	47.0	13.2
	13.0	11.8	60.9	16.3	57.5	15.4	54.1	14.5	52.1	14.1	50.4	13.7	47.0	12.8
	15.0	13.7	60.9	15.7	57.5	14.9	54.1	14.1	52.1	13.7	50.4	13.3	47.0	12.5
	19.0	14.2	60.9	15.2	57.5	14.3	54.1	13.6	52.1	13.1	50.4	12.8	47.0	11.9
	21.0	15.0	60.9	14.3	57.5	13.9	54.1	13.2	52.1	12.5	50.4	12.3	47.0	11.5

15) 36HP capacity

heating

capacity factor(%)	outdoor temp.		indoor temp.℃WB											
			16.0		18.0		20.0		21.0		22.0		24.0	
			TC	PI	TC	PI	TC	PI	TC	PI	TC	PI	TC	PI
	℃DB	℃WB	KW	KW	KW	KW	KW	KW	KW	KW	KW	KW	KW	KW
130	-14.7	-15.0	69.5	21.3	69.5	22.5	69.5	23.8	69.3	24.4	69.3	25.0	69.3	26.3
	-12.6	-13.0	73.4	22.6	73.4	23.8	73.4	25.0	73.4	25.5	73.4	26.1	73.4	27.3
	-10.5	-11.0	77.6	23.7	77.6	24.9	77.6	26.0	77.6	26.5	77.6	27.1	77.6	28.1
	-9.5	-10.0	79.9	24.3	79.9	25.4	79.9	26.4	79.9	27.0	79.9	27.6	79.9	28.7
	-8.5	-9.1	81.7	24.7	81.7	25.8	81.7	26.9	81.7	27.4	81.7	27.9	81.7	29.0
	-7.0	-7.6	84.9	25.5	84.9	26.5	84.9	27.5	84.9	28.1	84.9	28.4	84.9	29.5
	-5.0	-5.6	88.9	26.3	88.9	27.3	88.9	28.1	88.9	28.7	88.9	29.2	88.9	30.1
	-3.0	-3.7	92.8	27.1	92.8	27.9	92.8	29.0	92.8	29.5	92.8	29.8	92.8	30.9
	0.0	-0.7	99.2	28.1	99.2	29.0	99.2	29.8	99.2	30.3	99.2	30.6	99.2	31.4
	3.0	2.2	104.8	29.0	104.8	29.8	104.8	30.6	104.8	30.9	104.8	31.4	104.8	32.3
	5.0	4.1	109.1	29.5	109.1	30.3	109.1	31.2	109.1	31.4	109.1	32.0	109.1	32.5
	7.0	6.0	113.0	30.1	113.0	30.9	113.0	31.4	113.0	32.0	113.0	32.3	113.0	33.1
	9.0	7.9	117.0	30.3	116.8	31.2	116.8	32.0	116.8	32.3	116.8	32.5	116.8	33.4
	11.0	9.8	120.9	30.9	120.9	31.4	120.9	32.3	120.9	32.5	120.9	33.1	120.9	33.6
	13.0	11.8	125.2	31.2	125.2	32.0	125.2	32.5	125.2	33.1	125.2	33.4	125.2	33.9
	15.0	13.7	129.0	31.7	128.9	32.3	128.9	32.8	128.9	33.4	128.9	33.6	128.0	33.6
	19.0	14.2	129.0	32.0	128.9	32.6	128.9	33.1	128.9	33.7	128.9	34.0	128.0	33.0
	21.0	15.0	129.0	32.2	128.9	32.9	128.9	33.4	128.9	33.9	128.9	33.4	128.0	32.6
120	-14.7	-15.0	69.5	23.0	69.3	24.1	69.3	25.3	69.3	25.9	69.3	26.4	69.3	27.6
	-12.6	-13.0	73.4	24.2	73.4	25.3	73.4	26.4	73.4	26.9	73.4	27.5	73.4	28.7
	-10.5	-11.0	77.6	25.3	77.6	26.3	77.6	27.3	77.6	27.9	77.6	28.4	77.6	29.5
	-9.5	-10.0	79.9	25.8	79.9	26.8	79.9	27.9	79.9	28.1	79.9	28.7	79.9	29.8
	-8.5	-9.1	81.7	26.2	81.7	27.1	81.7	28.1	81.7	28.7	81.7	29.2	81.7	30.1
	-7.0	-7.6	84.9	26.8	84.9	27.9	84.9	28.7	84.9	29.2	84.9	29.5	84.9	30.6
	-5.0	-5.6	88.9	27.6	88.9	28.4	88.9	29.5	88.9	29.8	88.9	30.3	88.9	31.2
	-3.0	-3.7	92.8	28.4	92.8	29.2	92.8	30.1	92.8	30.3	92.8	30.9	92.8	31.7
	0.0	-0.7	99.2	29.2	99.2	30.1	99.2	30.9	99.2	31.2	99.2	31.7	99.2	32.5
	3.0	2.2	104.8	30.1	104.8	30.9	104.8	31.7	104.8	32.0	104.8	32.3	104.8	33.1
	5.0	4.1	109.1	30.6	109.1	31.2	109.1	32.0	109.1	32.3	109.1	32.8	109.1	33.4
	7.0	6.0	113.0	30.9	113.0	31.7	113.0	32.5	113.0	32.8	113.0	33.1	113.0	33.9
	9.0	7.9	116.8	31.4	116.8	32.0	116.8	32.8	116.8	33.1	116.8	33.4	116.8	34.2
	11.0	9.8	120.9	31.7	120.9	32.5	120.9	33.1	120.9	33.4	120.9	33.6	118.1	33.1
	13.0	11.8	125.2	32.3	125.2	32.8	125.2	33.4	125.2	33.6	125.2	34.2	118.1	32.0
	15.0	13.7	128.9	32.5	128.9	33.1	128.9	33.6	128.9	33.9	127.5	33.4	118.1	30.6
	19.0	14.2	128.9	32.8	128.9	33.4	128.9	33.7	128.9	33.6	127.5	32.8	118.1	29.9
	21.0	15.0	128.9	33.1	128.9	33.6	128.9	33.9	128.9	33.3	127.5	31.8	118.1	29.3
110	-14.7	-15.0	69.3	24.7	69.3	25.7	69.3	26.8	69.3	27.3	69.3	27.9	69.3	29.0
	-12.6	-13.0	73.4	25.8	73.4	26.8	73.4	27.9	73.4	28.4	73.4	28.7	73.4	29.8
	-10.5	-11.0	77.6	26.8	77.6	27.6	77.6	28.7	77.6	29.2	77.6	29.5	77.6	30.6
	-9.5	-10.0	79.9	27.2	79.9	28.1	79.9	29.0	79.9	29.5	79.9	30.1	79.9	30.9
	-8.5	-9.1	81.7	27.6	81.7	28.4	81.7	29.5	81.7	29.8	81.7	30.3	81.7	31.2
	-7.0	-7.6	84.9	28.1	84.9	29.0	84.9	29.8	84.9	30.3	84.9	30.9	84.9	31.7
	-5.0	-5.6	88.9	29.0	88.9	29.8	88.9	30.6	88.9	30.9	88.9	31.4	88.9	32.3
	-3.0	-3.7	92.8	29.5	92.8	30.3	92.8	31.2	92.8	31.4	92.8	32.0	92.8	32.5
	0.0	-0.7	99.2	30.3	99.0	31.2	99.0	32.0	99.0	32.3	99.0	32.5	99.0	33.4
	3.0	2.2	104.8	31.2	104.8	32.0	104.8	32.5	104.8	32.8	104.8	33.4	104.8	33.9
	5.0	4.1	109.1	31.7	109.1	32.3	109.1	32.8	109.1	33.4	109.1	33.6	108.3	33.9
	7.0	6.0	113.0	32.0	113.0	32.5	113.0	33.4	113.0	33.6	113.0	33.9	108.3	32.5
	9.0	7.9	116.8	32.5	116.8	33.1	116.8	33.6	116.8	33.9	116.0	33.9	108.3	31.2
	11.0	9.8	120.9	32.8	120.9	33.4	120.9	33.9	120.2	33.9	116.0	32.5	108.3	30.1

heating

capacity factor(%)	outdoor temp.		indoor temp.℃WB											
			16.0		18.0		20.0		21.0		22.0		24.0	
			TC	PI	TC	PI	TC	PI	TC	PI	TC	PI	TC	PI
	℃DB	℃WB	KW	KW	KW	KW	KW	KW	KW	KW	KW	KW	KW	KW
110	13.0	11.8	125.2	33.1	125.2	33.6	124.4	33.6	120.2	32.5	116.0	31.2	108.3	29.0
	15.0	13.7	129.0	33.4	129.0	33.9	124.4	32.5	120.2	31.4	116.0	30.1	108.3	27.9
	19.0	14.2	129.0	31.2	129.0	33.6	124.4	31.5	120.2	30.2	116.0	29.0	108.3	26.9
	21.0	15.0	129.0	31.5	129.0	32.6	124.4	29.8	120.2	29.3	116.0	28.2	108.3	26.6
100	-14.7	-15.0	69.3	26.4	69.3	27.3	69.3	28.4	69.3	28.7	69.3	29.2	69.3	30.3
	-12.6	-13.0	73.4	27.4	73.4	28.4	73.4	29.2	73.4	29.5	73.4	30.1	73.4	30.9
	-10.5	-11.0	77.6	28.4	77.6	29.2	77.6	30.1	77.6	30.3	77.6	30.9	77.6	31.7
	-9.5	-10.0	79.9	28.7	79.9	29.5	79.9	30.3	79.9	30.9	79.9	31.2	79.9	32.0
	-8.5	-9.1	81.7	29.0	81.7	29.8	81.7	30.6	81.7	31.2	81.7	31.4	81.7	32.3
	-7.0	-7.6	84.9	29.5	84.9	30.3	84.9	31.2	84.9	31.4	84.9	32.0	84.9	32.8
	-5.0	-5.6	88.9	30.3	88.9	30.9	88.9	31.7	88.9	32.0	88.9	32.5	88.9	33.1
	-3.0	-3.7	92.8	30.9	92.8	31.4	92.8	32.3	92.8	32.5	92.8	32.8	92.8	33.6
	0.0	-0.7	99.0	31.7	99.0	32.3	99.0	32.8	99.0	33.4	99.0	33.6	98.4	34.2
	3.0	2.2	104.8	32.3	104.8	32.8	104.8	33.6	104.8	33.9	104.8	34.2	98.6	32.0
	5.0	4.1	109.1	32.5	109.1	33.4	109.1	33.9	109.1	34.2	107.1	33.1	98.6	30.6
	7.0	6.0	113.0	33.1	113.0	33.6	113.0	34.2	109.4	32.8	105.8	31.7	98.6	29.2
	9.0	7.9	116.8	33.4	116.8	33.9	113.0	32.8	109.4	31.7	105.8	30.3	98.6	28.1
	11.0	9.8	120.9	33.6	120.2	33.9	113.0	31.4	109.4	30.3	105.8	29.2	98.6	27.1
	13.0	11.8	125.2	33.9	120.2	32.5	113.0	30.3	109.4	29.2	105.8	28.1	98.6	26.0
	15.0	13.7	127.4	33.4	120.2	31.4	113.0	29.2	109.4	28.1	105.8	27.1	98.6	25.1
	19.0	14.2	127.4	32.5	120.2	30.4	113.0	28.5	109.4	27.0	105.8	26.1	98.6	24.5
	21.0	15.0	127.4	31.5	120.2	29.0	113.0	27.4	109.4	26.6	105.8	25.3	98.6	23.9
90	-14.7	-15.0	69.3	28.1	69.3	29.0	69.3	29.8	69.3	30.3	69.3	30.6	69.3	31.4
	-12.6	-13.0	73.4	29.0	73.4	29.8	73.4	30.6	73.4	30.9	73.4	31.4	73.4	32.3
	-10.5	-11.0	77.6	29.8	77.6	30.6	77.6	31.4	77.6	31.7	77.6	32.0	77.6	32.8
	-9.5	-10.0	79.9	30.1	79.9	30.9	79.9	31.7	79.9	32.0	79.9	32.3	79.9	33.1
	-8.5	-9.1	81.7	30.3	81.7	31.2	81.7	32.0	81.7	32.3	81.7	32.5	81.7	33.4
	-7.0	-7.6	84.9	30.9	84.9	31.7	84.9	32.3	84.9	32.8	84.9	33.1	84.7	33.6
	-5.0	-5.6	88.9	31.4	88.9	32.3	88.9	32.8	88.9	33.1	88.9	33.6	87.7	34.2
	-3.0	-3.7	92.8	32.0	92.8	32.8	92.8	33.4	92.8	33.6	92.8	33.9	88.4	32.8
	0.0	-0.7	99.0	32.8	99.0	33.4	99.0	33.9	98.0	34.2	95.1	32.8	88.4	30.3
	3.0	2.2	104.8	33.4	104.8	33.9	101.6	33.1	98.1	32.0	95.1	30.6	88.4	28.4
	5.0	4.1	109.1	33.6	108.4	33.9	101.6	31.7	98.1	30.6	95.1	29.2	88.4	27.1
	7.0	6.0	113.0	33.9	108.4	32.5	101.6	30.3	98.1	29.2	95.1	28.1	88.4	26.1
	9.0	7.9	114.8	33.4	108.4	31.2	101.6	29.2	98.1	28.1	95.1	27.1	88.4	25.1
	11.0	9.8	114.8	32.0	108.4	30.1	101.6	28.1	98.1	27.0	95.1	26.1	88.4	24.2
	13.0	11.8	114.8	30.9	108.4	29.0	101.6	26.9	98.1	26.0	95.1	25.1	88.4	23.3
	15.0	13.7	114.8	29.8	108.4	27.9	101.6	26.0	98.1	25.1	95.1	24.2	88.4	22.5
	19.0	14.2	114.8	29.0	108.4	27.1	101.6	25.2	98.1	24.4	95.1	23.4	88.4	21.7
	21.0	15.0	114.8	28.0	108.4	26.1	101.6	24.7	98.1	23.6	95.1	22.5	88.4	20.8
80	-14.7	-15.0	69.3	29.8	69.3	30.6	69.3	31.4	69.3	31.7	69.3	32.0	69.3	32.8
	-12.6	-13.0	73.4	30.6	73.4	31.2	73.4	32.0	73.4	32.3	73.4	32.8	73.4	33.4
	-10.5	-11.0	77.6	31.2	77.6	32.0	77.6	32.5	77.6	33.1	77.6	33.4	77.2	33.9
	-9.5	-10.0	79.9	31.7	79.9	32.3	79.9	32.8	79.9	33.4	79.9	33.6	78.3	34.2
	-8.5	-9.1	81.7	32.0	81.7	32.5	81.7	33.1	81.7	33.6	81.7	33.9	78.8	33.6
	-7.0	-7.6	84.9	32.3	84.9	32.8	84.7	33.6	84.7	33.9	83.7	34.2	78.8	32.0
	-5.0	-5.6	88.9	32.8	88.9	33.4	88.9	33.9	87.2	34.2	84.6	32.8	78.8	30.3
	-3.0	-3.7	92.8	33.4	92.8	33.9	90.4	33.6	87.2	32.3	84.6	31.2	78.8	28.7
	0.0	-0.7	99.0	33.9	96.1	33.4	90.4	31.2	87.2	30.1	84.6	28.7	78.8	26.6
	3.0	2.2	101.7	33.1	96.1	31.2	90.4	29.0	87.2	27.9	84.6	26.9	78.8	24.9
	5.0	4.1	101.7	31.7	96.1	29.8	90.4	27.9	87.2	26.8	84.6	25.8	78.8	23.9
	7.0	6.0	101.7	30.3	96.1	28.4	90.4	26.6	87.2	25.7	84.6	24.8	78.8	23.0
	9.0	7.9	101.7	29.2	96.1	27.4	90.4	25.6	87.2	24.7	84.6	23.9	78.8	22.1
	11.0	9.8	101.7	28.1	96.1	26.4	90.4	24.7	87.2	23.8	84.6	23.0	78.8	21.3
	13.0	11.8	101.7	27.1	96.1	25.4	90.4	23.7	87.2	22.9	84.6	22.1	78.8	20.6
	15.0	13.7	101.7	26.1	96.1	24.3	90.4	22.9	87.2	22.2	84.6	21.4	78.8	19.9
	19.0	14.2	101.7	25.2	96.1	23.8	90.4	22.0	87.2	21.4	84.6	20.5	78.8	19.4
	21.0	15.0	101.7	24.5	96.1	22.8	90.4	21.4	87.2	20.7	84.6	19.8	78.8	18.4

heating

capacity factor(%)	outdoor temp.		indoor temp.℃WB											
			16.0		18.0		20.0		21.0		22.0		24.0	
			TC	PI	TC	PI	TC	PI	TC	PI	TC	PI	TC	PI
	℃DB	℃WB	KW	KW	KW	KW	KW	KW	KW	KW	KW	KW	KW	KW
70	-14.7	-15.0	69.3	31.4	69.3	32.3	69.3	32.8	69.3	33.1	69.3	33.4	67.7	34.2
	-12.6	-13.0	73.4	32.3	73.4	32.8	73.4	33.4	73.4	33.6	72.4	34.2	68.9	32.8
	-10.5	-11.0	77.6	32.8	77.6	33.4	77.4	33.9	75.8	34.2	73.9	33.1	68.9	30.6
	-9.5	-10.0	79.9	33.1	79.9	33.6	78.5	34.2	76.4	33.4	73.9	32.0	68.9	29.5
	-8.5	-9.1	81.7	33.4	81.7	33.9	79.2	33.6	76.4	32.5	73.9	31.2	68.9	29.0
	-7.0	-7.6	84.7	33.6	83.5	34.2	79.2	32.3	76.4	30.9	73.9	29.8	68.9	27.6
	-5.0	-5.6	88.3	34.2	84.2	32.5	79.2	30.3	76.4	29.2	73.9	28.1	68.9	26.1
	-3.0	-3.7	89.2	33.1	84.2	30.9	79.2	29.0	76.4	27.9	73.9	26.8	68.9	24.9
	0.0	-0.7	89.2	30.6	84.2	28.7	79.2	26.8	76.4	25.8	73.9	24.9	68.9	23.1
	3.0	2.2	89.2	28.7	84.2	26.8	79.2	25.0	76.4	24.2	73.9	23.3	68.9	21.7
	5.0	4.1	89.2	27.4	84.2	25.7	79.2	24.0	76.4	23.2	73.9	22.4	68.9	20.8
	7.0	6.0	89.2	26.3	84.2	24.7	79.2	23.1	76.4	22.3	73.9	21.5	68.9	20.1
	9.0	7.9	89.2	25.3	84.2	23.7	79.2	22.2	76.4	21.5	73.9	20.8	68.9	19.3
	11.0	9.8	89.2	24.3	84.2	22.9	79.2	21.5	76.4	20.7	73.9	19.9	68.9	18.7
	13.0	11.8	89.2	23.4	84.2	22.0	79.2	20.7	76.4	20.0	73.9	19.3	68.9	18.0
	15.0	13.7	89.2	22.6	84.2	21.3	79.2	20.0	76.4	19.4	73.9	18.7	68.9	17.5
	19.0	14.2	89.2	21.5	84.2	20.7	79.2	19.5	76.4	18.5	73.9	17.7	68.9	16.8
	21.0	15.0	89.2	20.7	84.2	19.7	79.2	18.6	76.4	17.6	73.9	16.8	68.9	15.9
60	-14.7	-15.0	69.3	33.1	69.3	33.6	67.1	34.2	65.6	33.1	63.5	32.0	59.1	29.5
	-12.6	-13.0	73.4	33.6	71.4	34.2	67.8	32.0	65.6	30.9	63.5	29.8	59.1	27.5
	-10.5	-11.0	75.8	34.2	72.0	32.3	67.8	30.1	65.6	29.0	63.5	27.9	59.1	25.8
	-9.5	-10.0	76.4	33.4	72.0	31.2	67.8	29.2	65.6	28.1	63.5	27.1	59.1	25.0
	-8.5	-9.1	76.4	32.5	72.0	30.3	67.8	28.4	65.6	27.3	63.5	26.3	59.1	24.4
	-7.0	-7.6	76.4	30.9	72.0	29.0	67.8	27.1	65.6	26.1	63.5	25.2	59.1	23.4
	-5.0	-5.6	76.4	29.2	72.0	27.4	67.8	25.7	65.6	24.8	63.5	23.9	59.1	22.2
	-3.0	-3.7	76.4	27.9	72.0	26.1	67.8	24.4	65.6	23.6	63.5	22.8	59.1	21.2
	0.0	-0.7	76.4	25.8	72.0	24.2	67.8	22.7	65.6	22.0	63.5	21.2	59.1	19.7
	3.0	2.2	76.4	24.2	72.0	22.7	67.8	21.3	65.6	20.6	63.5	19.9	59.1	18.6
	5.0	4.1	76.4	23.2	72.0	21.8	67.8	20.5	65.6	19.8	63.5	19.1	59.1	17.8
	7.0	6.0	76.4	22.3	72.0	21.0	67.8	19.7	65.6	19.1	63.5	18.5	59.1	17.2
	9.0	7.9	76.4	21.5	72.0	20.2	67.8	19.0	65.6	18.4	63.5	17.8	59.1	16.6
	11.0	9.8	76.4	20.7	72.0	19.5	67.8	18.4	65.6	17.8	63.5	17.2	59.1	16.1
	13.0	11.8	76.4	20.0	72.0	18.9	67.8	17.7	65.6	17.2	63.5	16.7	59.1	15.6
	15.0	13.7	76.4	19.4	72.0	18.3	67.8	17.2	65.6	16.7	63.5	16.1	59.1	15.1
	19.0	14.2	76.4	18.8	72.0	17.4	67.8	16.7	65.6	16.1	63.5	15.5	59.1	14.5
	21.0	15.0	76.4	18.0	72.0	16.9	67.8	16.0	65.6	15.6	63.5	15.0	59.1	13.9
50	-14.7	-15.0	63.8	32.0	60.1	30.1	56.6	28.1	54.6	27.1	52.8	26.1	49.1	24.2
	-12.6	-13.0	63.8	30.1	60.1	28.1	56.6	26.2	54.6	25.3	52.8	24.4	49.1	22.6
	-10.5	-11.0	63.8	28.1	60.1	26.3	56.6	24.6	54.6	23.8	52.8	22.9	49.1	21.3
	-9.5	-10.0	63.8	27.2	60.1	25.5	56.6	23.9	54.6	23.1	52.8	22.3	49.1	20.7
	-8.5	-9.1	63.8	26.5	60.1	24.9	56.6	23.3	54.6	22.5	52.8	21.7	49.1	20.2
	-7.0	-7.6	63.8	25.4	60.1	23.8	56.6	22.3	54.6	21.6	52.8	20.9	49.1	19.4
	-5.0	-5.6	63.8	24.0	60.1	22.6	56.6	21.2	54.6	20.5	52.8	19.8	49.1	18.5
	-3.0	-3.7	63.8	22.9	60.1	21.5	56.6	20.2	54.6	19.6	52.8	18.9	49.1	17.7
	0.0	-0.7	63.8	21.3	60.1	20.1	56.6	18.9	54.6	18.3	52.8	17.7	49.1	16.5
	3.0	2.2	63.8	20.0	60.1	18.9	56.6	17.8	54.6	17.2	52.8	16.7	49.1	15.6
	5.0	4.1	63.8	19.3	60.1	18.2	56.6	17.1	54.6	16.6	52.8	16.0	49.1	15.0
	7.0	6.0	63.8	18.5	60.1	17.5	56.6	16.5	54.6	16.0	52.8	15.5	49.1	14.5
	9.0	7.9	63.8	17.9	60.1	16.9	56.6	15.9	54.6	15.5	52.8	15.0	49.1	14.1
	11.0	9.8	63.8	17.3	60.1	16.4	56.6	15.4	54.6	15.0	52.8	14.5	49.1	13.6
	13.0	11.8	63.8	16.7	60.1	15.8	56.6	14.9	54.6	14.5	52.8	14.1	49.1	13.2
	15.0	13.7	63.8	16.2	60.1	15.4	56.6	14.5	54.6	14.1	52.8	13.7	49.1	12.9
	19.0	14.2	63.8	15.7	60.1	14.8	56.6	14.0	54.6	13.5	52.8	13.2	49.1	12.3
	21.0	15.0	63.8	14.7	60.1	14.3	56.6	13.6	54.6	12.9	52.8	12.7	49.1	11.8

16) 38HP capacity

heating

capacity factor(%)	outdoor temp.		indoor temp.℃WB											
			16.0		18.0		20.0		21.0		22.0		24.0	
			TC	PI	TC	PI	TC	PI	TC	PI	TC	PI	TC	PI
	℃DB	℃WB	kW	kW	kW	kW	kW	kW	kW	kW	kW	kW	kW	kW
130	-14.7	-15.0	73.0	22.6	73.0	23.9	73.0	25.2	72.9	25.8	72.9	26.5	72.9	27.8
	-12.6	-13.0	77.1	23.9	77.1	25.2	77.1	26.4	77.1	27.0	77.1	27.6	77.1	28.8
	-10.5	-11.0	81.4	25.1	81.4	26.2	81.4	27.4	81.4	27.9	81.4	28.5	81.4	29.6
	-9.5	-10.0	84.2	25.6	84.2	26.7	84.2	27.8	84.2	28.4	84.2	29.0	84.2	30.1
	-8.5	-9.1	86.6	26.0	86.6	27.1	86.6	28.2	86.6	28.8	86.6	29.3	86.6	30.4
	-7.0	-7.6	90.2	26.8	90.2	27.8	90.2	28.9	90.2	29.5	90.2	29.8	90.2	30.9
	-5.0	-5.6	94.5	27.6	94.5	28.6	94.5	29.5	94.5	30.1	94.5	30.6	94.5	31.5
	-3.0	-3.7	98.6	28.4	98.6	29.2	98.6	30.3	98.6	30.9	98.6	31.2	98.6	32.3
	0.0	-0.7	104.8	29.4	104.8	30.3	104.8	31.2	104.8	31.7	104.8	32.0	104.8	32.9
	3.0	2.2	110.3	30.3	110.3	31.1	110.3	32.0	110.3	32.3	110.3	32.8	110.3	33.7
	5.0	4.1	114.8	30.8	114.8	31.7	114.8	32.5	114.8	32.8	114.8	33.4	114.8	34.0
	7.0	6.0	119.0	31.4	119.0	32.2	119.0	32.8	119.0	33.3	119.0	33.7	119.0	34.5
	9.0	7.9	123.3	31.7	123.2	32.5	123.2	33.3	123.2	33.7	123.2	34.0	123.2	34.8
	11.0	9.8	127.8	32.2	127.8	32.8	127.8	33.7	127.8	34.0	127.8	34.5	127.8	35.1
	13.0	11.8	131.6	32.5	131.6	33.3	131.6	34.0	131.6	34.5	131.6	34.8	131.6	35.4
	15.0	13.7	135.6	33.0	135.5	33.6	135.5	34.3	135.5	34.8	135.5	35.1	134.6	35.3
	19.0	14.2	135.6	33.4	135.5	34.1	135.5	34.6	135.5	35.1	135.5	35.4	134.6	34.5
	21.0	15.0	135.6	33.8	135.5	34.5	135.5	35.0	135.5	35.4	135.5	35.1	134.6	33.8
120	-14.7	-15.0	73.0	24.4	72.9	25.6	72.9	26.8	72.9	27.3	72.9	27.9	72.9	29.1
	-12.6	-13.0	77.1	25.6	77.1	26.7	77.1	27.8	77.1	28.4	77.1	28.9	77.1	30.1
	-10.5	-11.0	81.4	26.6	81.4	27.7	81.4	28.7	81.4	29.3	81.4	29.8	81.4	31.0
	-9.5	-10.0	84.2	27.1	84.2	28.1	84.2	29.2	84.2	29.6	84.2	30.1	84.2	31.3
	-8.5	-9.1	86.6	27.5	86.6	28.5	86.6	29.5	86.6	30.1	86.6	30.6	86.6	31.5
	-7.0	-7.6	90.2	28.2	90.2	29.2	90.2	30.1	90.2	30.6	90.2	31.0	90.2	32.1
	-5.0	-5.6	94.5	28.9	94.5	29.8	94.5	30.9	94.5	31.2	94.5	31.8	94.5	32.6
	-3.0	-3.7	98.6	29.7	98.6	30.6	98.6	31.5	98.6	31.8	98.6	32.3	98.6	33.2
	0.0	-0.7	104.8	30.6	104.8	31.4	104.8	32.3	104.8	32.6	104.8	33.1	104.8	33.4
	3.0	2.2	110.3	31.4	110.3	32.2	110.3	33.1	110.3	33.4	110.3	33.7	110.3	34.6
	5.0	4.1	114.8	32.0	114.8	32.6	114.8	33.4	114.8	33.7	114.8	34.2	114.8	34.9
	7.0	6.0	119.0	32.3	119.0	33.1	119.0	33.9	119.0	34.2	119.0	34.5	119.0	35.4
	9.0	7.9	123.2	32.8	123.2	33.4	123.2	34.2	123.2	34.5	123.2	34.8	123.5	35.7
	11.0	9.8	127.8	33.1	127.8	33.9	127.8	34.5	127.8	34.8	127.8	35.1	124.4	34.7
	13.0	11.8	131.6	33.6	131.6	34.2	131.6	34.8	131.6	35.1	131.6	35.6	124.4	33.5
	15.0	13.7	135.5	33.9	135.5	34.5	135.5	35.1	135.5	35.4	133.9	35.0	124.4	32.1
	19.0	14.2	135.5	34.4	135.5	35.0	135.5	35.3	135.5	35.1	133.9	34.3	124.4	31.5
	21.0	15.0	135.5	34.8	135.5	35.0	135.5	35.1	135.5	34.6	133.9	33.2	124.4	31.0
110	-14.7	-15.0	72.9	26.1	72.9	27.2	72.9	28.2	72.9	28.8	72.9	29.4	72.9	30.5
	-12.6	-13.0	77.1	27.2	77.1	28.2	77.1	29.3	77.1	29.9	77.1	30.2	77.1	31.3
	-10.5	-11.0	81.4	28.2	81.4	29.0	81.4	30.1	81.4	30.7	81.4	31.0	81.4	32.1
	-9.5	-10.0	84.2	28.6	84.2	29.6	84.2	30.4	84.2	31.0	84.2	31.5	84.2	32.4
	-8.5	-9.1	86.6	29.0	86.6	29.9	86.6	30.9	86.6	31.3	86.6	31.8	86.6	32.7
	-7.0	-7.6	90.2	29.5	90.2	30.4	90.2	31.3	90.2	31.8	90.2	32.3	90.2	33.2
	-5.0	-5.6	94.5	30.3	94.5	31.2	94.5	32.0	94.5	32.4	94.5	32.9	94.5	33.7
	-3.0	-3.7	98.6	30.9	98.6	31.8	98.6	32.6	98.6	32.9	98.6	33.5	98.6	34.1
	0.0	-0.7	104.8	31.8	104.7	32.6	104.7	33.4	104.7	33.7	104.7	34.0	104.7	34.9
	3.0	2.2	110.3	32.6	110.3	33.4	110.3	34.0	110.3	34.3	110.3	34.8	110.3	35.4
	5.0	4.1	114.8	33.1	114.8	33.7	114.8	34.3	114.8	34.8	114.8	35.1	114.1	35.4
	7.0	6.0	119.0	33.4	119.0	34.0	119.0	34.8	119.0	35.1	119.0	35.4	114.1	33.9
	9.0	7.9	123.2	33.9	123.2	34.5	123.2	35.1	123.2	35.4	122.3	35.2	114.1	32.6
	11.0	9.8	127.8	34.2	127.8	34.8	127.8	35.4	126.6	35.5	122.3	34.1	114.1	31.5

heating

capacity factor(%)	outdoor temp.		indoor temp.℃WB											
			16.0		18.0		20.0		21.0		22.0		24.0	
			TC	PI	TC	PI	TC	PI	TC	PI	TC	PI	TC	PI
	℃DB	℃WB	KW	KW	KW	KW	KW	KW	KW	KW	KW	KW	KW	KW
110	13.0	11.8	131.6	34.5	131.6	35.1	130.8	35.3	126.6	34.1	122.3	32.7	114.1	30.3
	15.0	13.7	135.6	34.8	135.6	35.4	131.0	34.1	126.6	32.9	122.3	31.6	114.1	29.2
	19.0	14.2	135.6	33.4	135.6	35.0	131.0	32.9	126.6	31.6	122.3	30.3	114.1	28.4
	21.0	15.0	135.6	33.4	135.6	34.0	131.0	31.4	126.6	30.6	122.3	29.5	114.1	27.9
100	-14.7	-15.0	72.9	27.8	72.9	28.8	72.9	29.9	72.9	30.3	72.9	30.8	72.9	31.8
	-12.6	-13.0	77.1	28.8	77.1	29.9	77.1	30.7	77.1	31.1	77.1	31.6	77.1	32.5
	-10.5	-11.0	81.4	29.8	81.4	30.7	81.4	31.5	81.4	31.9	81.4	32.4	81.4	33.2
	-9.5	-10.0	84.2	30.1	84.2	31.0	84.2	31.8	84.2	32.3	84.2	32.7	84.2	33.5
	-8.5	-9.1	86.6	30.4	86.6	31.3	86.6	32.1	86.6	32.6	86.6	33.0	86.6	33.8
	-7.0	-7.6	90.2	31.0	90.2	31.8	90.2	32.6	90.2	33.0	90.2	33.5	90.2	34.3
	-5.0	-5.6	94.5	31.7	94.5	32.4	94.5	33.2	94.5	33.5	94.5	34.0	94.5	34.7
	-3.0	-3.7	98.6	32.3	98.6	32.9	98.6	33.7	98.6	34.0	98.6	34.4	98.6	35.2
	0.0	-0.7	104.7	33.1	104.7	33.7	104.7	34.3	104.7	34.8	104.7	35.1	103.5	35.5
	3.0	2.2	110.3	33.7	110.3	34.3	110.3	35.1	110.3	35.4	110.3	35.7	103.7	33.3
	5.0	4.1	114.8	34.0	114.8	34.8	114.8	35.4	114.8	35.7	112.7	34.5	103.7	31.9
	7.0	6.0	119.0	34.5	119.0	35.1	119.0	35.7	115.1	34.3	111.4	33.1	103.7	30.5
	9.0	7.9	123.2	34.8	123.0	35.4	119.0	34.3	115.1	33.1	111.4	31.7	103.7	29.4
	11.0	9.8	127.8	35.1	126.5	35.5	119.0	32.9	115.1	31.8	111.4	30.6	103.7	29.3
	13.0	11.8	131.6	35.4	126.5	34.0	119.0	31.8	115.1	30.6	111.4	29.5	103.7	27.3
	15.0	13.7	134.2	35.0	126.5	32.9	119.0	30.6	115.1	29.5	111.4	28.5	103.7	26.3
	19.0	14.2	134.2	34.0	126.5	31.8	119.0	29.9	115.1	28.2	111.4	27.2	103.7	25.4
	21.0	15.0	134.2	33.0	126.5	30.5	119.0	28.7	115.1	27.6	111.4	26.2	103.7	24.7
90	-14.7	-15.0	72.9	29.6	72.9	30.5	72.9	31.4	72.9	31.9	72.9	32.2	72.9	33.0
	-12.6	-13.0	77.1	30.5	77.1	31.3	77.1	32.1	77.1	32.5	77.1	32.9	77.1	33.8
	-10.5	-11.0	81.4	31.3	81.4	32.1	81.4	32.9	81.4	33.3	81.4	33.5	81.4	34.3
	-9.5	-10.0	84.2	31.6	84.2	32.4	84.2	33.3	84.2	33.6	84.2	33.8	84.2	34.7
	-8.5	-9.1	86.6	31.8	86.6	32.7	86.6	33.6	86.6	33.9	86.6	34.1	86.6	35.0
	-7.0	-7.6	90.2	32.4	90.2	33.2	90.2	33.9	90.2	34.4	90.2	34.7	90.1	35.3
	-5.0	-5.6	94.5	32.9	94.5	33.7	94.5	34.4	94.5	34.7	94.5	35.2	92.5	35.4
	-3.0	-3.7	98.6	33.5	98.6	34.3	98.6	34.9	98.6	35.2	98.6	35.5	93.2	34.1
	0.0	-0.7	104.7	34.3	104.7	34.9	104.7	35.5	103.3	35.4	100.1	34.2	93.2	31.3
	3.0	2.2	110.3	34.9	111.3	35.4	107.0	34.4	103.4	33.3	100.1	31.9	93.2	29.5
	5.0	4.1	114.8	35.2	113.9	35.4	107.0	33.0	103.4	31.9	100.1	30.5	93.2	28.3
	7.0	6.0	119.0	35.5	113.9	34.0	107.0	31.7	103.4	30.5	100.1	29.4	93.2	27.2
	9.0	7.9	120.8	34.9	113.9	32.6	107.0	30.5	103.4	29.4	100.1	28.3	93.2	26.2
	11.0	9.8	120.8	33.5	113.9	31.4	107.0	29.4	103.4	28.3	100.1	27.3	93.2	25.3
	13.0	11.8	120.8	32.3	113.9	30.3	107.0	28.2	103.4	27.3	100.1	26.3	93.2	24.4
	15.0	13.7	120.8	31.2	113.9	29.2	107.0	27.3	103.4	26.3	100.1	25.4	93.2	23.6
	19.0	14.2	120.8	30.3	113.9	28.3	107.0	26.4	103.4	25.5	100.1	24.4	93.2	22.6
	21.0	15.0	120.8	29.1	113.9	27.1	107.0	25.8	103.4	24.6	100.1	23.4	93.2	21.7
80	-14.7	-15.0	72.9	31.3	72.9	32.2	72.9	33.0	72.9	33.3	72.9	33.6	72.9	34.4
	-12.6	-13.0	77.1	32.1	77.1	32.8	77.1	33.6	77.1	33.9	77.1	34.4	77.1	35.0
	-10.5	-11.0	81.4	32.7	81.4	33.5	81.4	34.1	81.4	34.6	81.4	35.0	81.3	35.4
	-9.5	-10.0	84.2	33.2	84.2	33.8	84.2	34.4	84.2	34.9	84.2	35.2	82.4	35.3
	-8.5	-9.1	86.6	33.5	86.6	34.1	86.6	34.7	86.6	35.2	86.6	35.5	82.9	34.5
	-7.0	-7.6	90.2	33.8	90.2	34.4	90.1	35.2	90.1	35.5	88.1	35.4	82.9	33.0
	-5.0	-5.6	94.5	34.4	94.5	34.9	94.5	35.5	91.9	35.3	89.0	33.9	82.9	31.3
	-3.0	-3.7	98.6	34.9	98.6	35.5	95.2	34.8	91.9	33.4	89.0	32.3	82.9	29.7
	0.0	-0.7	104.7	35.5	101.1	34.5	95.2	32.3	91.9	31.2	89.0	29.8	82.9	27.7
	3.0	2.2	107.2	34.5	101.1	32.4	95.2	30.2	91.9	29.0	89.0	28.0	82.9	26.0
	5.0	4.1	107.2	33.1	101.1	31.0	95.2	29.0	91.9	27.9	89.0	26.9	82.9	25.0
	7.0	6.0	107.2	31.7	101.1	29.7	95.2	27.8	91.9	26.8	89.0	25.9	82.9	24.0
	9.0	7.9	107.2	30.5	101.1	28.6	95.2	26.8	91.9	25.8	89.0	24.9	82.9	23.1
	11.0	9.8	107.2	29.4	101.1	27.6	95.2	25.8	91.9	24.9	89.0	24.0	82.9	22.4
	13.0	11.8	107.2	28.3	101.1	26.6	95.2	24.9	91.9	24.0	89.0	23.2	82.9	21.6
	15.0	13.7	107.2	27.4	101.1	25.5	95.2	24.1	91.9	23.3	89.0	22.5	82.9	20.9
	19.0	14.2	107.2	26.4	101.1	25.0	95.2	23.2	91.9	22.3	89.0	21.5	82.9	20.2
	21.0	15.0	107.2	25.6	101.1	24.0	95.2	22.4	91.9	21.5	89.0	20.7	82.9	19.2

heating

capacity factor(%)	outdoor temp.		indoor temp.℃WB											
			16.0		18.0		20.0		21.0		22.0		24.0	
			TC	PI	TC	PI	TC	PI	TC	PI	TC	PI	TC	PI
	℃DB	℃WB	KW	KW	KW	KW	KW	KW	KW	KW	KW	KW	KW	KW
70	-14.7	-15.0	72.9	33.0	72.9	33.8	72.9	34.5	72.9	34.8	72.9	35.1	71.4	35.3
	-12.6	-13.0	77.1	33.8	77.1	34.4	77.1	35.0	77.1	35.3	76.3	35.4	72.6	33.7
	-10.5	-11.0	81.4	34.3	81.4	35.0	81.5	35.4	79.8	35.1	77.8	34.1	72.6	31.6
	-9.5	-10.0	84.2	34.6	84.2	35.2	82.6	35.3	80.4	34.3	77.8	33.0	72.6	30.4
	-8.5	-9.1	86.6	34.9	86.6	35.5	83.3	34.6	80.4	33.4	77.8	32.1	72.6	29.8
	-7.0	-7.6	90.1	35.2	87.9	35.3	83.3	33.3	80.4	31.9	77.8	30.8	72.6	28.5
	-5.0	-5.6	93.0	35.6	88.6	33.7	83.3	31.4	80.4	30.3	77.8	29.1	72.6	27.0
	-3.0	-3.7	93.9	34.3	88.6	32.0	83.3	30.0	80.4	28.9	77.8	27.8	72.6	25.8
	0.0	-0.7	93.9	31.8	88.6	29.8	83.3	27.8	80.4	26.8	77.8	25.9	72.6	24.0
	3.0	2.2	93.9	29.8	88.6	27.9	83.3	26.0	80.4	25.2	77.8	24.3	72.6	22.6
	5.0	4.1	93.9	28.5	88.6	26.8	83.3	25.0	80.4	24.2	77.8	23.4	72.6	21.7
	7.0	6.0	93.9	27.4	88.6	25.7	83.3	24.1	80.4	23.3	77.8	22.5	72.6	20.9
	9.0	7.9	93.9	26.4	88.6	24.8	83.3	23.2	80.4	22.5	77.8	21.7	72.6	20.2
	11.0	9.8	93.9	25.4	88.6	23.9	83.3	22.4	80.4	21.7	77.8	20.9	72.6	19.5
	13.0	11.8	93.9	24.5	88.6	23.1	83.3	21.6	80.4	21.0	77.8	20.3	72.6	18.9
	15.0	13.7	93.9	23.7	88.6	22.3	83.3	21.0	80.4	20.3	77.8	19.6	72.6	18.3
	19.0	14.2	93.9	22.7	88.6	21.6	83.3	20.3	80.4	19.5	77.8	18.6	72.6	17.6
	21.0	15.0	93.9	21.8	88.6	20.5	83.3	19.4	80.4	18.4	77.8	17.7	72.6	16.6
60	-14.7	-15.0	72.9	34.8	72.9	35.3	70.6	35.1	69.1	33.8	66.8	32.7	62.1	30.2
	-12.6	-13.0	77.1	35.3	75.2	35.1	71.3	32.8	69.1	31.7	66.8	30.5	62.1	28.2
	-10.5	-11.0	79.8	35.1	75.8	33.2	71.3	30.9	69.1	29.8	66.8	28.7	62.1	26.6
	-9.5	-10.0	80.4	34.3	75.8	32.1	71.3	30.0	69.1	28.9	66.8	27.9	62.1	25.8
	-8.5	-9.1	80.4	33.4	75.8	31.3	71.3	29.3	69.1	28.2	66.8	27.1	62.1	25.2
	-7.0	-7.6	80.4	31.9	75.8	29.9	71.3	28.0	69.1	27.0	66.8	26.1	62.1	24.2
	-5.0	-5.6	80.4	30.3	75.8	28.4	71.3	26.6	69.1	25.6	66.8	24.7	62.1	23.0
	-3.0	-3.7	80.4	28.9	75.8	27.0	71.3	25.3	69.1	24.5	66.8	23.6	62.1	21.9
	0.0	-0.7	80.4	26.8	75.8	25.2	71.3	23.6	69.1	22.8	66.8	22.0	62.1	20.5
	3.0	2.2	80.4	25.1	75.8	23.7	71.3	22.2	69.1	21.4	66.8	20.7	62.1	19.4
	5.0	4.1	80.4	24.2	75.8	22.7	71.3	21.3	69.1	20.6	66.8	20.0	62.1	18.6
	7.0	6.0	80.4	23.3	75.8	21.9	71.3	20.6	69.1	19.9	66.8	19.3	62.1	18.0
	9.0	7.9	80.4	22.5	75.8	21.2	71.3	19.9	69.1	19.3	66.8	18.6	62.1	17.4
	11.0	9.8	80.4	21.7	75.8	20.4	71.3	19.2	69.1	18.6	66.8	18.0	62.1	16.8
	13.0	11.8	80.4	20.9	75.8	19.7	71.3	18.6	69.1	18.0	66.8	17.4	62.1	16.3
	15.0	13.7	80.4	20.3	75.8	19.1	71.3	18.0	69.1	17.4	66.8	16.9	62.1	15.8
	19.0	14.2	80.4	19.6	75.8	18.3	71.3	17.3	69.1	16.8	66.8	16.2	62.1	15.2
	21.0	15.0	80.4	18.8	75.8	17.7	71.3	16.6	69.1	16.2	66.8	15.7	62.1	14.5
50	-14.7	-15.0	67.1	32.7	63.2	30.7	59.5	28.7	57.5	27.7	55.6	26.7	51.7	24.7
	-12.6	-13.0	67.1	30.8	63.2	28.8	59.5	26.9	57.5	26.0	55.6	25.1	51.7	23.3
	-10.5	-11.0	67.1	28.9	63.2	27.1	59.5	25.3	57.5	24.5	55.6	23.6	51.7	21.9
	-9.5	-10.0	67.1	28.0	63.2	26.3	59.5	24.6	57.5	23.8	55.6	23.0	51.7	21.3
	-8.5	-9.1	67.1	27.3	63.2	25.6	59.5	24.0	57.5	23.2	55.6	22.4	51.7	20.8
	-7.0	-7.6	67.1	26.2	63.2	24.6	59.5	23.0	57.5	22.3	55.6	21.5	51.7	20.1
	-5.0	-5.6	67.1	24.9	63.2	23.4	59.5	21.9	57.5	21.2	55.6	20.5	51.7	19.1
	-3.0	-3.7	67.1	23.7	63.2	22.3	59.5	21.0	57.5	20.3	55.6	19.6	51.7	18.3
	0.0	-0.7	67.1	22.1	63.2	20.9	59.5	19.6	57.5	19.0	55.6	18.4	51.7	17.2
	3.0	2.2	67.1	20.8	63.2	19.6	59.5	18.5	57.5	17.9	55.6	17.3	51.7	16.2
	5.0	4.1	67.1	20.1	63.2	19.0	59.5	17.9	57.5	17.3	55.6	16.8	51.7	15.7
	7.0	6.0	67.1	19.3	63.2	18.3	59.5	17.2	57.5	16.7	55.6	16.2	51.7	15.2
	9.0	7.9	67.1	18.7	63.2	17.7	59.5	16.7	57.5	16.2	55.6	15.7	51.7	14.7
	11.0	9.8	67.1	18.1	63.2	17.1	59.5	16.2	57.5	15.7	55.6	15.2	51.7	14.3
	13.0	11.8	67.1	17.5	63.2	16.5	59.5	15.6	57.5	15.2	55.6	14.7	51.7	13.8
	15.0	13.7	67.1	17.0	63.2	16.1	59.5	15.2	57.5	14.8	55.6	14.3	51.7	13.4
	19.0	14.2	67.1	16.4	63.2	15.5	59.5	14.6	57.5	14.1	55.6	13.7	51.7	12.9
	21.0	15.0	67.1	15.5	63.2	14.8	59.5	14.1	57.5	13.5	55.6	13.2	51.7	12.4

17) 40HP capacity

heating

capacity factor(%)	outdoor temp.		indoor temp.℃WB											
			16.0		18.0		20.0		21.0		22.0		24.0	
			TC	PI	TC	PI	TC	PI	TC	PI	TC	PI	TC	PI
	℃DB	℃WB	KW	KW	KW	KW	KW	KW	KW	KW	KW	KW	KW	KW
130	-14.7	-15.0	76.2	24.0	76.2	25.4	76.2	26.8	76.1	27.5	76.1	28.3	76.1	29.7
	-12.6	-13.0	80.7	25.5	80.7	26.8	80.7	28.2	80.7	28.8	80.7	29.5	80.7	30.8
	-10.5	-11.0	85.6	26.8	85.6	28.1	85.6	29.3	85.6	29.9	85.6	30.6	85.6	31.8
	-9.5	-10.0	88.3	27.4	88.3	28.6	88.3	29.9	88.3	30.5	88.3	31.1	88.3	32.4
	-8.5	-9.1	90.3	27.9	90.3	29.1	90.3	30.3	90.3	30.9	90.3	31.4	90.3	32.7
	-7.0	-7.6	93.9	28.7	93.9	29.9	93.9	31.0	93.9	31.8	93.9	32.1	93.9	33.3
	-5.0	-5.6	98.7	29.7	98.7	30.8	98.7	31.8	98.7	32.4	98.7	33.0	98.7	33.9
	-3.0	-3.7	103.2	30.6	103.2	31.4	103.2	32.7	103.2	33.3	103.2	33.6	103.2	34.9
	0.0	-0.7	110.5	31.8	110.5	32.7	110.5	33.6	110.5	34.2	110.5	34.6	110.5	35.5
	3.0	2.2	117.2	32.7	117.2	33.6	117.2	34.6	117.2	34.9	117.2	35.5	117.2	36.4
	5.0	4.1	121.9	33.3	121.9	34.2	121.9	35.2	121.9	35.5	121.9	36.1	121.9	36.7
	7.0	6.0	126.5	33.9	126.5	34.9	126.5	35.5	126.5	36.1	126.5	36.4	126.5	37.4
	9.0	7.9	131.0	34.2	130.9	35.2	130.9	36.1	130.9	36.4	130.9	36.7	130.9	37.7
	11.0	9.8	135.5	34.9	135.5	35.5	135.5	36.4	135.5	36.7	135.5	37.4	135.5	38.0
	13.0	11.8	139.5	35.2	139.5	36.1	139.5	36.7	139.5	37.4	139.5	37.7	139.5	38.3
	15.0	13.7	144.9	35.8	144.8	36.4	144.8	37.0	144.8	37.7	144.8	38.0	143.3	38.0
	19.0	14.2	144.9	36.1	144.8	36.8	144.8	37.4	144.8	38.0	144.8	38.3	143.3	37.2
	21.0	15.0	144.9	36.4	144.8	37.2	144.8	37.7	144.8	38.2	144.8	37.7	143.3	36.8
120	-14.7	-15.0	76.2	25.9	76.1	27.2	76.1	28.5	76.1	29.2	76.1	29.9	76.1	31.1
	-12.6	-13.0	80.7	27.3	80.7	28.5	80.7	29.8	80.7	30.4	80.7	31.0	80.7	32.4
	-10.5	-11.0	85.6	28.5	85.6	29.7	85.6	30.8	85.6	31.4	85.6	32.1	85.6	33.3
	-9.5	-10.0	88.3	29.1	88.3	30.2	88.3	31.4	88.3	31.8	88.3	32.4	88.3	33.6
	-8.5	-9.1	90.3	29.5	90.3	30.6	90.3	31.8	90.3	32.4	90.3	33.0	90.3	33.9
	-7.0	-7.6	93.9	30.3	93.9	31.4	93.9	32.4	93.9	33.0	93.9	33.3	93.9	34.6
	-5.0	-5.6	98.7	31.1	98.7	32.1	98.7	33.3	98.7	33.6	98.7	34.2	98.7	35.2
	-3.0	-3.7	103.2	32.1	103.2	33.0	103.2	33.9	103.2	34.2	103.2	34.9	103.2	35.8
	0.0	-0.7	110.5	33.0	110.5	33.9	110.5	34.9	110.5	35.2	110.5	35.8	110.5	36.7
	3.0	2.2	117.2	33.9	117.2	34.9	117.2	35.8	117.2	36.1	117.2	36.4	117.2	37.4
	5.0	4.1	121.9	34.6	121.9	35.2	121.9	36.1	121.9	36.4	121.9	37.0	121.9	37.7
	7.0	6.0	126.5	34.9	126.5	35.8	126.5	36.7	126.5	37.0	126.5	37.4	126.5	38.3
	9.0	7.9	130.9	35.5	130.9	36.1	130.9	37.0	130.9	37.4	130.9	37.7	130.9	38.6
	11.0	9.8	135.5	35.8	135.5	36.7	135.5	37.4	135.5	37.7	135.5	38.0	132.3	37.4
	13.0	11.8	139.5	36.4	139.5	37.0	139.5	37.7	139.5	38.0	139.5	38.6	132.3	36.1
	15.0	13.7	144.8	36.7	144.8	37.4	144.8	38.0	144.8	38.3	142.3	37.7	132.3	34.6
	19.0	14.2	144.8	37.0	144.8	37.7	144.8	38.0	144.8	37.9	142.3	37.0	132.3	33.7
	21.0	15.0	144.8	37.4	144.8	38.0	144.8	38.2	144.8	37.6	142.3	35.9	132.3	33.1
110	-14.7	-15.0	76.1	27.8	76.1	29.0	76.1	30.2	76.1	30.8	76.1	31.4	76.1	32.7
	-12.6	-13.0	80.7	29.1	80.7	30.2	80.7	31.4	80.7	32.1	80.7	32.4	80.7	33.6
	-10.5	-11.0	85.6	30.2	85.6	31.1	85.6	32.4	85.6	33.0	85.6	33.3	85.6	34.6
	-9.5	-10.0	88.3	30.7	88.3	31.8	88.3	32.7	88.3	33.3	88.3	33.9	88.3	34.9
	-8.5	-9.1	90.3	31.1	90.3	32.1	90.3	33.3	90.3	33.6	90.3	34.2	90.3	35.2
	-7.0	-7.6	93.9	31.8	93.9	32.7	93.9	33.6	93.9	34.2	93.9	34.9	93.9	35.8
	-5.0	-5.6	98.7	32.7	98.7	33.6	98.7	34.6	98.7	34.9	98.7	35.5	98.7	36.4
	-3.0	-3.7	103.2	33.3	103.2	34.2	103.2	35.2	103.2	35.5	103.2	36.1	103.2	36.7
	0.0	-0.7	110.5	34.2	110.4	35.2	110.4	36.1	110.4	36.4	110.4	36.7	110.4	37.7
	3.0	2.2	117.2	35.2	117.2	36.1	117.2	36.7	117.2	37.0	117.2	37.7	117.2	38.3
	5.0	4.1	121.9	35.8	121.9	36.4	121.9	37.0	121.9	37.7	121.9	38.0	121.3	38.3
	7.0	6.0	126.5	36.1	126.5	36.7	126.5	37.7	126.5	38.0	126.5	38.3	121.3	36.7
	9.0	7.9	130.9	36.7	130.9	37.4	130.9	38.0	130.9	38.3	130.0	38.3	121.3	35.2
	11.0	9.8	135.5	37.0	135.5	37.7	135.5	38.3	134.6	38.3	130.0	36.7	121.3	33.9

capacity factor(%)	outdoor temp.		indoor temp.℃WB											
			16.0		18.0		20.0		21.0		22.0		24.0	
			TC	PI	TC	PI	TC	PI	TC	PI	TC	PI	TC	PI
	℃DB	℃WB	KW	KW	KW	KW	KW	KW	KW	KW	KW	KW	KW	KW
110	13.0	11.8	139.5	37.4	139.5	38.0	139.3	38.0	134.6	36.7	130.0	35.2	121.3	32.7
	15.0	13.7	144.9	37.7	144.9	38.3	139.3	36.7	134.6	35.5	130.0	33.9	121.3	31.4
	19.0	14.2	144.9	35.2	144.9	37.9	139.3	35.5	134.6	34.1	130.0	32.8	121.3	30.4
	21.0	15.0	144.9	35.5	144.9	36.8	139.3	33.6	134.6	33.0	130.0	31.9	121.3	30.0
100	-14.7	-15.0	76.1	29.8	76.1	30.8	76.1	32.1	76.1	32.4	76.1	33.0	76.1	34.2
	-12.6	-13.0	80.7	30.9	80.7	32.1	80.7	33.0	80.7	33.3	80.7	33.9	80.7	34.9
	-10.5	-11.0	85.6	32.1	85.6	33.0	85.6	33.9	85.6	34.2	85.6	34.9	85.6	35.8
	-9.5	-10.0	88.3	32.4	88.3	33.3	88.3	34.2	88.3	34.9	88.3	35.2	88.3	36.1
	-8.5	-9.1	90.3	32.7	90.3	33.6	90.3	34.6	90.3	35.2	90.3	35.5	90.3	36.4
	-7.0	-7.6	93.9	33.3	93.9	34.2	93.9	35.2	93.9	35.5	93.9	36.1	93.9	37.0
	-5.0	-5.6	98.7	34.2	98.7	34.9	98.7	35.8	98.7	36.1	98.7	36.7	98.7	37.4
	-3.0	-3.7	103.2	34.9	103.2	35.5	103.2	36.4	103.2	36.7	103.2	37.0	103.2	38.0
	0.0	-0.7	110.4	35.8	110.4	36.4	110.4	37.0	110.4	37.7	110.4	38.0	110.2	38.6
	3.0	2.2	117.2	36.4	117.2	37.0	117.2	38.0	117.2	38.3	117.2	38.6	110.4	36.1
	5.0	4.1	121.9	36.7	121.9	37.7	121.9	38.3	121.9	38.6	119.7	37.4	110.4	34.6
	7.0	6.0	126.5	37.4	126.5	38.0	126.5	38.6	122.5	37.0	118.4	35.8	110.4	33.0
	9.0	7.9	130.9	37.7	130.9	38.3	126.5	37.0	122.5	35.8	118.4	34.2	110.4	31.8
	11.0	9.8	135.5	38.0	134.6	38.3	126.5	35.5	122.5	34.2	118.4	33.0	110.4	30.5
	13.0	11.8	139.5	38.3	134.6	36.7	126.5	34.2	122.5	33.0	118.4	31.8	110.4	29.4
	15.0	13.7	142.6	37.7	134.6	35.5	126.5	33.0	122.5	31.8	118.4	30.6	110.4	28.4
	19.0	14.2	142.6	36.7	134.6	34.3	126.5	32.2	122.5	30.4	118.4	29.4	110.4	27.6
	21.0	15.0	142.6	35.5	134.6	32.8	126.5	31.0	122.5	30.0	118.4	28.6	110.4	27.0
90	-14.7	-15.0	76.1	31.8	76.1	32.7	76.1	33.6	76.1	34.2	76.1	34.6	76.1	35.5
	-12.6	-13.0	80.7	32.7	80.7	33.6	80.7	34.6	80.7	34.9	80.7	35.5	80.7	36.4
	-10.5	-11.0	85.6	33.6	85.6	34.6	85.6	35.5	85.6	35.8	85.6	36.1	85.6	37.0
	-9.5	-10.0	88.3	33.9	88.3	34.9	88.3	35.8	88.3	36.1	88.3	36.4	88.3	37.4
	-8.5	-9.1	90.3	34.2	90.3	35.2	90.3	36.1	90.3	36.4	90.3	36.7	90.3	37.7
	-7.0	-7.6	93.9	34.9	93.9	35.8	93.9	36.4	93.9	37.0	93.9	37.4	93.8	38.0
	-5.0	-5.6	98.7	35.5	98.7	36.4	98.7	37.0	98.7	37.4	98.7	38.0	98.1	38.6
	-3.0	-3.7	103.2	36.1	103.2	37.0	103.2	37.7	103.2	38.0	103.2	38.3	99.0	37.0
	0.0	-0.7	110.4	37.0	110.4	37.7	110.4	38.3	109.8	38.6	106.4	37.0	99.0	34.2
	3.0	2.2	117.2	37.7	117.2	38.3	113.9	37.4	109.9	36.1	106.4	34.6	99.0	32.1
	5.0	4.1	121.9	38.0	121.3	38.3	113.9	35.8	109.9	34.6	106.4	33.0	99.0	30.6
	7.0	6.0	126.5	38.3	121.3	36.7	113.9	34.2	109.9	33.0	106.4	31.8	99.0	29.4
	9.0	7.9	128.6	37.7	121.3	35.2	113.9	33.0	109.9	31.8	106.4	30.6	99.0	28.3
	11.0	9.8	128.6	36.1	121.3	33.9	113.9	31.8	109.9	30.5	106.4	29.4	99.0	27.3
	13.0	11.8	128.6	34.9	121.3	32.7	113.9	30.4	109.9	29.4	106.4	28.3	99.0	26.3
	15.0	13.7	128.6	33.6	121.3	31.4	113.9	29.4	109.9	28.4	106.4	27.4	99.0	25.4
	19.0	14.2	128.6	32.8	121.3	30.5	113.9	28.4	109.9	27.5	106.4	26.4	99.0	24.5
	21.0	15.0	128.6	31.6	121.3	29.4	113.9	27.9	109.9	26.6	106.4	25.4	99.0	23.5
80	-14.7	-15.0	76.1	33.6	76.1	34.6	76.1	35.5	76.1	35.8	76.1	36.1	76.1	37.0
	-12.6	-13.0	80.7	34.6	80.7	35.2	80.7	36.1	80.7	36.4	80.7	37.0	80.7	37.7
	-10.5	-11.0	85.6	35.2	85.6	36.1	85.6	36.7	85.6	37.4	85.6	37.7	85.4	38.3
	-9.5	-10.0	88.3	35.8	88.3	36.4	88.3	37.0	88.3	37.7	88.3	38.0	87.5	38.6
	-8.5	-9.1	90.3	36.1	90.3	36.7	90.3	37.4	90.3	38.0	90.3	38.3	88.1	38.0
	-7.0	-7.6	93.9	36.4	93.9	37.0	93.8	38.0	93.8	38.3	93.3	38.6	88.1	36.1
	-5.0	-5.6	98.7	37.0	98.7	37.7	98.7	38.3	97.7	38.6	94.7	37.0	88.1	34.2
	-3.0	-3.7	103.2	37.7	103.2	38.3	101.2	38.0	97.7	36.4	94.7	35.2	88.1	32.4
	0.0	-0.7	110.4	38.3	107.6	37.7	101.2	35.2	97.7	33.9	94.7	32.4	88.1	30.1
	3.0	2.2	114.1	37.4	107.6	35.2	101.2	32.7	97.7	31.4	94.7	30.4	88.1	28.1
	5.0	4.1	114.1	35.8	107.6	33.6	101.2	31.4	97.7	30.2	94.7	29.1	88.1	27.0
	7.0	6.0	114.1	34.2	107.6	32.1	101.2	30.0	97.7	29.0	94.7	28.0	88.1	26.0
	9.0	7.9	114.1	33.0	107.6	30.9	101.2	28.9	97.7	27.9	94.7	26.9	88.1	25.0
	11.0	9.8	114.1	31.8	107.6	29.8	101.2	27.8	97.7	26.9	94.7	26.0	88.1	24.1
	13.0	11.8	114.1	30.5	107.6	28.6	101.2	26.8	97.7	25.9	94.7	25.0	88.1	23.3
	15.0	13.7	114.1	29.5	107.6	27.4	101.2	25.9	97.7	25.0	94.7	24.2	88.1	22.5
	19.0	14.2	114.1	28.5	107.6	26.9	101.2	24.9	97.7	24.1	94.7	23.2	88.1	21.9
	21.0	15.0	114.1	27.7	107.6	25.8	101.2	24.2	97.7	23.3	94.7	22.4	88.1	20.8

heating

capacity factor(%)	outdoor temp.		indoor temp.℃WB											
			16.0		18.0		20.0		21.0		22.0		24.0	
			TC	PI	TC	PI	TC	PI	TC	PI	TC	PI	TC	PI
	℃DB	℃WB	KW	KW	KW	KW	KW	KW	KW	KW	KW	KW	KW	KW
70	-14.7	-15.0	76.1	35.5	76.1	36.4	76.1	37.0	76.1	37.4	76.1	37.7	75.3	38.6
	-12.6	-13.0	80.7	36.4	80.7	37.0	80.7	37.7	80.7	38.0	80.2	38.6	77.1	37.0
	-10.5	-11.0	85.6	37.0	85.6	37.7	85.5	38.3	84.7	38.6	82.8	37.4	77.1	34.6
	-9.5	-10.0	88.3	37.4	88.3	38.0	87.6	38.6	85.6	37.7	82.8	36.1	77.1	33.3
	-8.5	-9.1	90.3	37.7	90.3	38.3	88.7	38.0	85.6	36.7	82.8	35.2	77.1	32.7
	-7.0	-7.6	93.8	38.0	93.2	38.6	88.7	36.4	85.6	34.9	82.8	33.6	77.1	31.1
	-5.0	-5.6	98.4	38.6	94.2	36.7	88.7	34.2	85.6	33.0	82.8	31.8	77.1	29.5
	-3.0	-3.7	99.9	37.4	94.2	34.9	88.7	32.7	85.6	31.4	82.8	30.3	77.1	28.0
	0.0	-0.7	99.9	34.6	94.2	32.4	88.7	30.2	85.6	29.2	82.8	28.1	77.1	26.1
	3.0	2.2	99.9	32.4	94.2	30.2	88.7	28.2	85.6	27.3	82.8	26.3	77.1	24.4
	5.0	4.1	99.9	30.9	94.2	29.0	88.7	27.1	85.6	26.2	82.8	25.3	77.1	23.5
	7.0	6.0	99.9	29.6	94.2	27.8	88.7	26.1	85.6	25.2	82.8	24.3	77.1	22.6
	9.0	7.9	99.9	28.5	94.2	26.8	88.7	25.1	85.6	24.2	82.8	23.4	77.1	21.8
	11.0	9.8	99.9	27.5	94.2	25.8	88.7	24.2	85.6	23.4	82.8	22.4	77.1	21.1
	13.0	11.8	99.9	26.5	94.2	24.9	88.7	23.3	85.6	22.6	82.8	21.8	77.1	20.4
	15.0	13.7	99.9	25.6	94.2	24.1	88.7	22.6	85.6	21.9	82.8	21.1	77.1	19.7
	19.0	14.2	99.9	24.3	94.2	23.4	88.7	22.0	85.6	20.8	82.8	19.9	77.1	18.9
	21.0	15.0	99.9	23.4	94.2	22.3	88.7	21.0	85.6	19.9	82.8	18.9	77.1	17.9
60	-14.7	-15.0	76.1	37.4	76.1	38.0	75.0	38.6	73.4	37.4	71.1	36.1	66.1	33.3
	-12.6	-13.0	80.7	38.0	79.7	38.6	75.9	36.1	73.4	34.9	71.1	33.6	66.1	31.1
	-10.5	-11.0	84.7	38.6	80.6	36.4	75.9	33.9	73.4	32.7	71.1	31.4	66.1	29.1
	-9.5	-10.0	85.6	37.7	80.6	35.2	75.9	33.0	73.4	31.8	71.1	30.5	66.1	28.3
	-8.5	-9.1	85.6	36.7	80.6	34.2	75.9	32.1	73.4	30.8	71.1	29.7	66.1	27.5
	-7.0	-7.6	85.6	34.9	80.6	32.7	75.9	30.6	73.4	29.5	71.1	28.5	66.1	26.4
	-5.0	-5.6	85.6	33.0	80.6	31.0	75.9	29.0	73.4	28.0	71.1	27.0	66.1	25.0
	-3.0	-3.7	85.6	31.4	80.6	29.4	75.9	27.5	73.4	26.6	71.1	25.7	66.1	23.9
	0.0	-0.7	85.6	29.1	80.6	27.4	75.9	25.6	73.4	24.8	71.1	23.9	66.1	22.3
	3.0	2.2	85.6	27.3	80.6	25.6	75.9	24.0	73.4	23.3	71.1	22.5	66.1	20.9
	5.0	4.1	85.6	26.2	80.6	24.6	75.9	23.1	73.4	22.4	71.1	21.6	66.1	20.1
	7.0	6.0	85.6	25.2	80.6	23.7	75.9	22.3	73.4	21.5	71.1	20.8	66.1	19.4
	9.0	7.9	85.6	24.2	80.6	22.8	75.9	21.4	73.4	20.8	71.1	20.1	66.1	18.8
	11.0	9.8	85.6	23.4	80.6	22.0	75.9	20.7	73.4	20.1	71.1	19.4	66.1	18.2
	13.0	11.8	85.6	22.6	80.6	21.3	75.9	20.0	73.4	19.4	71.1	18.8	66.1	17.6
	15.0	13.7	85.6	21.9	80.6	20.6	75.9	19.4	73.4	18.8	71.1	18.2	66.1	17.1
	19.0	14.2	85.6	21.2	80.6	19.6	75.9	18.8	73.4	18.2	71.1	17.5	66.1	16.3
	21.0	15.0	85.6	20.3	80.6	19.1	75.9	18.0	73.4	17.6	71.1	17.0	66.1	15.7
50	-14.7	-15.0	71.3	36.1	67.2	33.9	63.3	31.8	61.1	30.6	59.1	29.4	55.0	27.3
	-12.6	-13.0	71.3	33.9	67.2	31.8	63.3	29.6	61.1	28.6	59.1	27.5	55.0	25.6
	-10.5	-11.0	71.3	31.8	67.2	29.7	63.3	27.8	61.1	26.8	59.1	25.9	55.0	24.1
	-9.5	-10.0	71.3	30.7	67.2	28.8	63.3	27.0	61.1	26.1	59.1	25.2	55.0	23.4
	-8.5	-9.1	71.3	29.9	67.2	28.0	63.3	26.3	61.1	25.4	59.1	24.5	55.0	22.8
	-7.0	-7.6	71.3	28.6	67.2	26.9	63.3	25.2	61.1	24.3	59.1	23.5	55.0	21.9
	-5.0	-5.6	71.3	27.1	67.2	25.5	63.3	23.9	61.1	23.1	59.1	22.4	55.0	20.8
	-3.0	-3.7	71.3	25.8	67.2	24.3	63.3	22.8	61.1	22.1	59.1	21.4	55.0	19.9
	0.0	-0.7	71.3	24.1	67.2	22.7	63.3	21.3	61.1	20.6	59.1	20.0	55.0	18.6
	3.0	2.2	71.3	22.6	67.2	21.3	63.3	20.0	61.1	19.4	59.1	18.8	55.0	17.6
	5.0	4.1	71.3	21.7	67.2	20.5	63.3	19.3	61.1	18.7	59.1	18.1	55.0	17.0
	7.0	6.0	71.3	20.9	67.2	19.8	63.3	18.6	61.1	18.1	59.1	17.5	55.0	16.4
	9.0	7.9	71.3	20.2	67.2	19.1	63.3	18.0	61.1	17.5	59.1	16.9	55.0	15.9
	11.0	9.8	71.3	19.5	67.2	18.5	63.3	17.4	61.1	16.9	59.1	16.4	55.0	15.4
	13.0	11.8	71.3	18.9	67.2	17.9	63.3	16.9	61.1	16.4	59.1	15.9	55.0	14.9
	15.0	13.7	71.3	18.3	67.2	17.3	63.3	16.4	61.1	15.9	59.1	15.4	55.0	14.5
	19.0	14.2	71.3	17.7	67.2	16.7	63.3	15.8	61.1	15.2	59.1	14.9	55.0	13.9
	21.0	15.0	71.3	16.6	67.2	16.2	63.3	15.4	61.1	14.6	59.1	14.3	55.0	13.3

18) 42HP capacity

heating

capacity factor(%)	outdoor temp.		indoor temp.℃WB											
			16.0		18.0		20.0		21.0		22.0		24.0	
			TC	PI	TC	PI	TC	PI	TC	PI	TC	PI	TC	PI
	℃DB	℃WB	KW	KW	KW	KW	KW	KW	KW	KW	KW	KW	KW	KW
130	-14.7	-15.0	78.7	24.6	78.7	26.1	78.7	27.5	78.6	28.3	78.6	29.0	78.6	30.5
	-12.6	-13.0	83.5	26.2	83.5	27.5	83.5	28.9	83.5	29.6	83.5	30.3	83.5	31.6
	-10.5	-11.0	88.6	27.5	88.6	28.8	88.6	30.1	88.6	30.7	88.6	31.4	88.6	32.6
	-9.5	-10.0	91.4	28.1	91.4	29.4	91.4	30.6	91.4	31.3	91.4	31.9	91.4	33.2
	-8.5	-9.1	93.5	28.6	93.5	29.9	93.5	31.1	93.5	31.7	93.5	32.3	93.5	33.5
	-7.0	-7.6	97.2	29.5	97.2	30.7	97.2	31.8	97.2	32.6	97.2	32.9	97.2	34.2
	-5.0	-5.6	102.2	30.5	102.2	31.6	102.2	32.6	102.2	33.2	102.2	33.9	102.2	34.8
	-3.0	-3.7	107.0	31.4	107.0	32.3	107.0	33.5	107.0	34.2	107.0	34.5	107.0	35.8
	0.0	-0.7	114.7	32.6	114.7	33.5	114.7	34.5	114.7	35.1	114.7	35.4	114.7	36.4
	3.0	2.2	121.7	33.5	121.7	34.5	121.7	35.4	121.7	35.8	121.7	36.4	121.7	37.4
	5.0	4.1	126.7	34.2	126.7	35.1	126.7	36.1	126.7	36.4	126.7	37.0	126.7	37.7
	7.0	6.0	131.5	34.8	131.5	35.8	131.5	36.4	131.5	37.0	131.5	37.4	131.5	38.3
	9.0	7.9	136.2	35.1	136.1	36.1	136.1	37.0	136.1	37.4	136.1	37.7	136.1	38.6
	11.0	9.8	141.0	35.8	141.0	36.4	141.0	37.4	141.0	37.7	141.0	38.3	141.0	39.0
	13.0	11.8	146.3	36.1	146.3	37.0	146.3	37.7	146.3	38.3	146.3	38.6	146.3	39.3
	15.0	13.7	150.9	36.7	150.7	37.4	150.7	38.0	150.7	38.6	150.7	39.0	148.9	39.0
	19.0	14.2	150.9	37.1	150.7	37.8	150.7	38.4	150.7	39.0	150.7	39.3	148.9	38.2
	21.0	15.0	150.9	37.3	150.7	38.1	150.7	38.7	150.7	39.2	150.7	38.7	148.9	37.8
120	-14.7	-15.0	78.7	26.6	78.6	27.9	78.6	29.3	78.6	30.0	78.6	30.6	78.6	31.9
	-12.6	-13.0	83.5	28.0	83.5	29.3	83.5	30.5	83.5	31.2	83.5	31.8	83.5	33.2
	-10.5	-11.0	88.6	29.3	88.6	30.4	88.6	31.6	88.6	32.3	88.6	32.9	88.6	34.2
	-9.5	-10.0	91.4	29.8	91.4	31.0	91.4	32.3	91.4	32.6	91.4	33.2	91.4	34.5
	-8.5	-9.1	93.5	30.3	93.5	31.4	93.5	32.6	93.5	33.2	93.5	33.9	93.5	34.8
	-7.0	-7.6	97.2	31.1	97.2	32.3	97.2	33.2	97.2	33.9	97.2	34.2	97.2	35.4
	-5.0	-5.6	102.2	31.9	102.2	32.9	102.2	34.2	102.2	34.5	102.2	35.1	102.2	36.1
	-3.0	-3.7	107.0	32.9	107.0	33.9	107.0	34.8	107.0	35.1	107.0	35.8	107.0	36.7
	0.0	-0.7	114.7	33.9	114.7	34.8	114.7	35.8	114.7	36.1	114.7	36.7	114.7	37.7
	3.0	2.2	121.7	34.8	121.7	35.8	121.7	36.7	121.7	37.0	121.7	37.4	121.7	38.3
	5.0	4.1	126.7	35.4	126.7	36.1	126.7	37.0	126.7	37.4	126.7	38.0	126.7	38.6
	7.0	6.0	131.5	35.8	131.5	36.7	131.5	37.7	131.5	38.0	131.5	38.3	131.5	39.3
	9.0	7.9	136.1	36.4	136.1	37.0	136.1	38.0	136.1	38.3	136.1	38.6	136.1	39.6
	11.0	9.8	141.0	36.7	141.0	37.7	141.0	38.3	141.0	38.6	141.0	39.0	137.5	38.3
	13.0	11.8	146.3	37.4	146.3	38.0	146.3	38.6	146.3	39.0	146.3	39.6	137.5	37.0
	15.0	13.7	150.7	37.7	150.7	38.3	150.7	39.0	150.7	39.3	147.9	38.6	137.5	35.4
	19.0	14.2	150.7	38.0	150.7	38.6	150.7	39.0	150.7	38.9	147.9	38.0	137.5	34.6
	21.0	15.0	150.7	38.4	150.7	38.9	150.7	39.2	150.7	38.6	147.9	36.8	137.5	34.0
110	-14.7	-15.0	78.6	28.6	78.6	29.8	78.6	31.0	78.6	31.6	78.6	32.3	78.6	33.5
	-12.6	-13.0	83.5	29.9	83.5	31.0	83.5	32.3	83.5	32.9	83.5	33.2	83.5	34.5
	-10.5	-11.0	88.6	31.0	88.6	31.9	88.6	33.2	88.6	33.9	88.6	34.2	88.6	35.4
	-9.5	-10.0	91.4	31.5	91.4	32.6	91.4	33.5	91.4	34.2	91.4	34.8	91.4	35.8
	-8.5	-9.1	93.5	31.9	93.5	32.9	93.5	34.2	93.5	34.5	93.5	35.1	93.5	36.1
	-7.0	-7.6	97.2	32.6	97.2	33.5	97.2	34.5	97.2	35.1	97.2	35.8	97.2	36.7
	-5.0	-5.6	102.2	33.5	102.2	34.5	102.2	35.4	102.2	35.8	102.2	36.4	102.2	37.4
	-3.0	-3.7	107.0	34.2	107.0	35.1	107.0	36.1	107.0	36.4	107.0	37.0	107.0	37.7
	0.0	-0.7	114.7	35.1	114.6	36.1	114.6	37.0	114.6	37.4	114.6	37.7	114.6	38.6
	3.0	2.2	121.7	36.1	121.7	37.0	121.7	37.7	121.7	38.0	121.7	38.6	121.7	39.3
	5.0	4.1	126.7	36.7	126.7	37.4	126.7	38.0	126.7	38.6	126.7	39.0	126.0	39.3
	7.0	6.0	131.5	37.0	131.5	37.7	131.5	38.6	131.5	39.0	131.5	39.3	126.0	37.7
	9.0	7.9	136.1	37.7	136.1	38.3	136.1	39.0	136.1	39.3	135.1	39.3	126.0	36.1
	11.0	9.8	141.0	38.0	141.0	38.6	141.0	39.3	139.9	39.3	135.1	37.7	126.0	34.8

heating

capacity factor(%)	outdoor temp.		indoor temp.℃WB											
			16.0		18.0		20.0		21.0		22.0		24.0	
			TC	PI	TC	PI	TC	PI	TC	PI	TC	PI	TC	PI
	℃DB	℃WB	KW	KW	KW	KW	KW	KW	KW	KW	KW	KW	KW	KW
110	13.0	11.8	146.3	38.3	146.3	39.0	144.7	39.0	139.9	37.7	135.1	36.1	126.0	33.5
	15.0	13.7	150.9	38.6	150.9	39.3	144.7	37.7	139.9	36.4	135.1	34.8	126.0	32.3
	19.0	14.2	150.9	36.1	150.9	38.9	144.7	36.5	139.9	34.9	135.1	33.6	126.0	31.2
	21.0	15.0	150.9	36.4	150.9	37.8	144.7	34.5	139.9	33.9	135.1	32.7	126.0	30.7
100	-14.7	-15.0	78.6	30.5	78.6	31.6	78.6	32.9	78.6	33.2	78.6	33.9	78.6	35.1
	-12.6	-13.0	83.5	31.7	83.5	32.9	83.5	33.9	83.5	34.2	83.5	34.8	83.5	35.8
	-10.5	-11.0	88.6	32.9	88.6	33.9	88.6	34.8	88.6	35.1	88.6	35.8	88.6	36.7
	-9.5	-10.0	91.4	33.2	91.4	34.2	91.4	35.1	91.4	35.8	91.4	36.1	91.4	37.0
	-8.5	-9.1	93.5	33.5	93.5	34.5	93.5	35.4	93.5	36.1	93.5	36.4	93.5	37.4
	-7.0	-7.6	97.2	34.2	97.2	35.1	97.2	36.1	97.2	36.4	97.2	37.0	97.2	38.0
	-5.0	-5.6	102.2	35.1	102.2	35.8	102.2	36.7	102.2	37.0	102.2	37.7	102.2	38.3
	-3.0	-3.7	107.0	35.8	107.0	36.4	107.0	37.4	107.0	37.7	107.0	38.0	107.0	39.0
	0.0	-0.7	114.6	36.7	114.6	37.4	114.6	38.0	114.6	38.6	114.6	39.0	114.3	39.6
	3.0	2.2	121.7	37.4	121.7	38.0	121.7	39.0	121.7	39.3	121.7	39.6	114.7	37.0
	5.0	4.1	126.7	37.7	126.7	38.6	126.7	39.3	126.7	39.6	125.7	38.3	114.7	35.4
	7.0	6.0	131.5	38.3	131.5	39.0	131.5	39.6	127.3	38.0	123.1	36.7	114.7	33.9
	9.0	7.9	136.1	38.6	136.1	39.3	131.5	38.0	127.3	36.7	123.1	35.1	114.7	32.6
	11.0	9.8	141.0	39.0	139.9	39.3	131.5	36.4	127.3	35.1	123.1	33.9	114.7	31.3
	13.0	11.8	146.3	39.3	139.9	37.7	131.5	35.1	127.3	33.9	123.1	32.6	114.7	30.1
	15.0	13.7	148.3	38.6	139.9	36.4	131.5	33.9	127.3	32.6	123.1	31.4	114.7	29.1
	19.0	14.2	148.3	37.6	139.9	35.2	131.5	33.0	127.3	31.2	123.1	30.2	114.7	28.3
	21.0	15.0	148.3	36.4	139.9	33.6	131.5	31.8	127.3	30.7	123.1	29.3	114.7	27.7
90	-14.7	-15.0	78.6	32.6	78.6	33.5	78.6	34.5	78.6	35.1	78.6	35.4	78.6	36.4
	-12.6	-13.0	83.5	33.5	83.5	34.5	83.5	35.4	83.5	35.8	83.5	36.4	83.5	37.4
	-10.5	-11.0	88.6	34.5	88.6	35.4	88.6	36.4	88.6	36.7	88.6	37.0	88.6	38.0
	-9.5	-10.0	91.4	34.8	91.4	35.8	91.4	36.7	91.4	37.0	91.4	37.4	91.4	38.3
	-8.5	-9.1	93.5	35.1	93.5	36.1	93.5	37.0	93.5	37.4	93.5	37.7	93.5	38.6
	-7.0	-7.6	97.2	35.8	97.2	36.7	97.2	37.4	97.2	38.0	97.2	38.3	97.1	39.0
	-5.0	-5.6	102.2	36.4	102.2	37.4	102.2	38.0	102.2	38.3	102.2	39.0	101.6	39.6
	-3.0	-3.7	107.0	37.0	107.0	38.0	107.0	38.6	107.0	39.0	107.0	39.3	103.0	38.0
	0.0	-0.7	114.6	38.0	114.6	38.6	114.6	39.3	114.1	39.6	110.7	38.0	103.0	35.1
	3.0	2.2	121.7	38.6	121.7	39.3	118.3	38.3	114.3	37.0	110.7	35.4	103.0	32.9
	5.0	4.1	126.7	39.0	125.9	39.3	118.3	36.7	114.3	35.4	110.7	33.9	103.0	31.4
	7.0	6.0	131.5	39.3	125.9	37.7	118.3	35.1	114.3	33.9	110.7	32.6	103.0	30.2
	9.0	7.9	133.6	38.6	125.9	36.1	118.3	33.9	114.3	32.6	110.7	31.4	103.0	29.0
	11.0	9.8	133.6	37.0	125.9	34.8	118.3	32.6	114.3	31.3	110.7	30.2	103.0	28.0
	13.0	11.8	133.6	35.8	125.9	33.5	118.3	31.2	114.3	30.1	110.7	29.1	103.0	27.0
	15.0	13.7	133.6	34.5	125.9	32.3	118.3	30.1	114.3	29.1	110.7	28.1	103.0	26.0
	19.0	14.2	133.6	33.6	125.9	31.3	118.3	29.2	114.3	28.2	110.7	27.1	103.0	25.1
	21.0	15.0	133.6	32.4	125.9	30.2	118.3	28.6	114.3	27.3	110.7	26.1	103.0	24.1
80	-14.7	-15.0	78.6	34.5	78.6	35.4	78.6	36.4	78.6	36.7	78.6	37.0	78.6	38.0
	-12.6	-13.0	83.5	35.4	83.5	36.1	83.5	37.0	83.5	37.4	83.5	38.0	83.5	38.6
	-10.5	-11.0	88.6	36.1	88.6	37.0	88.6	37.7	88.6	38.3	88.6	38.6	88.4	39.3
	-9.5	-10.0	91.4	36.7	91.4	37.4	91.4	38.0	91.4	38.6	91.4	39.0	90.6	39.6
	-8.5	-9.1	93.5	37.0	93.5	37.7	93.5	38.3	93.5	39.0	93.5	39.3	91.6	39.0
	-7.0	-7.6	97.2	37.4	97.2	38.0	97.1	39.0	97.1	39.3	96.6	39.6	91.6	37.0
	-5.0	-5.6	102.2	38.0	102.2	38.6	102.2	39.3	101.5	39.6	98.4	38.0	91.6	35.1
	-3.0	-3.7	107.0	38.6	107.0	39.3	105.2	39.0	101.5	37.4	98.4	36.1	91.6	33.2
	0.0	-0.7	114.6	39.3	111.8	38.6	105.2	36.1	101.5	34.8	98.4	33.2	91.6	30.8
	3.0	2.2	118.5	38.3	111.8	36.1	105.2	33.5	101.5	32.3	98.4	31.2	91.6	28.9
	5.0	4.1	118.5	36.7	111.8	34.5	105.2	32.3	101.5	31.0	98.4	29.9	91.6	27.7
	7.0	6.0	118.5	35.1	111.8	32.9	105.2	30.8	101.5	29.8	98.4	28.7	91.6	26.6
	9.0	7.9	118.5	33.9	111.8	31.7	105.2	29.6	101.5	28.6	98.4	27.6	91.6	25.6
	11.0	9.8	118.5	32.6	111.8	30.5	105.2	28.6	101.5	27.6	98.4	26.6	91.6	24.7
	13.0	11.8	118.5	31.3	111.8	29.4	105.2	27.5	101.5	26.6	98.4	25.6	91.6	23.9
	15.0	13.7	118.5	30.2	111.8	28.1	105.2	26.6	101.5	25.7	98.4	24.8	91.6	23.1
	19.0	14.2	118.5	29.2	111.8	27.6	105.2	25.5	101.5	24.7	98.4	23.8	91.6	22.5
	21.0	15.0	118.5	28.4	111.8	26.4	105.2	24.8	101.5	23.9	98.4	22.9	91.6	21.3

heating

capacity factor(%)	outdoor temp.		indoor temp.℃WB											
			16.0		18.0		20.0		21.0		22.0		24.0	
			TC	PI	TC	PI	TC	PI	TC	PI	TC	PI	TC	PI
	℃DB	℃WB	KW	KW	KW	KW	KW	KW	KW	KW	KW	KW	KW	KW
70	-14.7	-15.0	78.6	36.4	78.6	37.4	78.6	38.0	78.6	38.3	78.6	38.6	77.8	39.6
	-12.6	-13.0	83.5	37.4	83.5	38.0	83.5	38.6	83.5	39.0	83.0	39.6	80.2	38.0
	-10.5	-11.0	88.6	38.0	88.6	38.6	88.5	39.3	87.7	39.6	86.0	38.3	80.2	35.4
	-9.5	-10.0	91.4	38.3	91.4	39.0	90.7	39.6	88.9	38.6	86.0	37.0	80.2	34.2
	-8.5	-9.1	93.5	38.6	93.5	39.3	92.1	39.0	88.9	37.7	86.0	36.1	80.2	33.5
	-7.0	-7.6	97.1	39.0	96.5	39.6	92.1	37.4	88.9	35.8	86.0	34.5	80.2	31.9
	-5.0	-5.6	101.9	39.6	97.9	37.7	92.1	35.1	88.9	33.9	86.0	32.6	80.2	30.2
	-3.0	-3.7	103.7	38.3	97.9	35.8	92.1	33.5	88.9	32.3	86.0	31.1	80.2	28.8
	0.0	-0.7	103.7	35.4	97.9	33.2	92.1	31.0	88.9	29.9	86.0	28.8	80.2	26.8
	3.0	2.2	103.7	33.2	97.9	31.0	92.1	29.0	88.9	28.0	86.0	27.0	80.2	25.1
	5.0	4.1	103.7	31.7	97.9	29.7	92.1	27.8	88.9	26.9	86.0	25.9	80.2	24.1
	7.0	6.0	103.7	30.4	97.9	28.6	92.1	26.7	88.9	25.8	86.0	24.9	80.2	23.2
	9.0	7.9	103.7	29.3	97.9	27.5	92.1	25.7	88.9	24.9	86.0	24.0	80.2	22.4
	11.0	9.8	103.7	28.2	97.9	26.5	92.1	24.8	88.9	24.0	86.0	23.0	80.2	21.6
	13.0	11.8	103.7	27.1	97.9	25.5	92.1	24.0	88.9	23.2	86.0	22.4	80.2	20.9
	15.0	13.7	103.7	26.2	97.9	24.7	92.1	23.2	88.9	22.4	86.0	21.7	80.2	20.2
	19.0	14.2	103.7	24.9	97.9	24.0	92.1	22.5	88.9	21.4	86.0	20.5	80.2	19.4
	21.0	15.0	103.7	24.0	97.9	22.8	92.1	21.5	88.9	20.4	86.0	19.4	80.2	18.4
60	-14.7	-15.0	78.6	38.3	78.6	39.0	77.5	39.6	76.3	38.3	73.9	37.0	68.7	34.2
	-12.6	-13.0	83.5	39.0	82.5	39.6	78.9	37.0	76.3	35.8	73.9	34.5	68.7	31.9
	-10.5	-11.0	87.7	39.6	83.7	37.4	78.9	34.8	76.3	33.5	73.9	32.3	68.7	29.9
	-9.5	-10.0	88.9	38.6	83.7	36.1	78.9	33.9	76.3	32.6	73.9	31.3	68.7	29.0
	-8.5	-9.1	88.9	37.7	83.7	35.1	78.9	32.9	76.3	31.6	73.9	30.5	68.7	28.3
	-7.0	-7.6	88.9	35.8	83.7	33.5	78.9	31.4	76.3	30.3	73.9	29.2	68.7	27.1
	-5.0	-5.6	88.9	33.9	83.7	31.8	78.9	29.7	76.3	28.7	73.9	27.7	68.7	25.7
	-3.0	-3.7	88.9	32.3	83.7	30.2	78.9	28.3	76.3	27.3	73.9	26.3	68.7	24.5
	0.0	-0.7	88.9	29.9	83.7	28.1	78.9	26.3	76.3	25.4	73.9	24.6	68.7	22.8
	3.0	2.2	88.9	28.0	83.7	26.3	78.9	24.7	76.3	23.9	73.9	23.1	68.7	21.5
	5.0	4.1	88.9	26.9	83.7	25.3	78.9	23.7	76.3	22.9	73.9	22.2	68.7	20.7
	7.0	6.0	88.9	25.8	83.7	24.3	78.9	22.8	76.3	22.1	73.9	21.4	68.7	19.9
	9.0	7.9	88.9	24.9	83.7	23.4	78.9	22.0	76.3	21.3	73.9	20.6	68.7	19.3
	11.0	9.8	88.9	24.0	83.7	22.6	78.9	21.3	76.3	20.6	73.9	19.9	68.7	18.7
	13.0	11.8	88.9	23.2	83.7	21.8	78.9	20.5	76.3	19.9	73.9	19.3	68.7	18.0
	15.0	13.7	88.9	22.4	83.7	21.1	78.9	19.9	76.3	19.3	73.9	18.7	68.7	17.5
	19.0	14.2	88.9	21.8	83.7	20.1	78.9	19.3	76.3	18.7	73.9	18.0	68.7	16.7
	21.0	15.0	88.9	20.9	83.7	19.5	78.9	18.5	76.3	18.1	73.9	17.4	68.7	16.1
50	-14.7	-15.0	74.2	37.0	69.8	34.8	65.8	32.6	63.6	31.4	61.5	30.2	57.1	28.0
	-12.6	-13.0	74.2	34.8	69.8	32.6	65.8	30.3	63.6	29.3	61.5	28.3	57.1	26.2
	-10.5	-11.0	74.2	32.6	69.8	30.5	65.8	28.5	63.6	27.5	61.5	26.6	57.1	24.7
	-9.5	-10.0	74.2	31.5	69.8	29.5	65.8	27.7	63.6	26.7	61.5	25.8	57.1	24.0
	-8.5	-9.1	74.2	30.7	69.8	28.8	65.8	27.0	63.6	26.0	61.5	25.1	57.1	23.4
	-7.0	-7.6	74.2	29.4	69.8	27.6	65.8	25.8	63.6	25.0	61.5	24.1	57.1	22.5
	-5.0	-5.6	74.2	27.8	69.8	26.2	65.8	24.5	63.6	23.7	61.5	22.9	57.1	21.4
	-3.0	-3.7	74.2	26.5	69.8	24.9	65.8	23.4	63.6	22.6	61.5	21.9	57.1	20.4
	0.0	-0.7	74.2	24.7	69.8	23.2	65.8	21.8	63.6	21.2	61.5	20.5	57.1	19.1
	3.0	2.2	74.2	23.2	69.8	21.8	65.8	20.6	63.6	19.9	61.5	19.3	57.1	18.0
	5.0	4.1	74.2	22.3	69.8	21.0	65.8	19.8	63.6	19.2	61.5	18.7	57.1	17.4
	7.0	6.0	74.2	21.5	69.8	20.3	65.8	19.1	63.6	18.5	61.5	17.9	57.1	16.8
	9.0	7.9	74.2	20.7	69.8	19.6	65.8	18.5	63.6	17.9	61.5	17.4	57.1	16.3
	11.0	9.8	74.2	20.0	69.8	18.9	65.8	17.9	63.6	17.3	61.5	16.8	57.1	15.8
	13.0	11.8	74.2	19.4	69.8	18.3	65.8	17.3	63.6	16.8	61.5	16.3	57.1	15.3
	15.0	13.7	74.2	18.8	69.8	17.8	65.8	16.8	63.6	16.3	61.5	15.8	57.1	14.9
	19.0	14.2	74.2	18.2	69.8	17.1	65.8	16.2	63.6	15.6	61.5	15.3	57.1	14.2
	21.0	15.0	74.2	17.0	69.8	16.6	65.8	15.8	63.6	14.9	61.5	14.7	57.1	13.7

19) 44HP capacity

heating

capacity factor(%)	outdoor temp.		indoor temp.℃WB											
			16.0		18.0		20.0		21.0		22.0		24.0	
			TC	PI	TC	PI	TC	PI	TC	PI	TC	PI	TC	PI
	℃DB	℃WB	KW	KW	KW	KW	KW	KW	KW	KW	KW	KW	KW	KW
130	-14.7	-15.0	82.2	26.0	82.2	27.5	82.2	29.0	82.2	29.7	82.2	30.4	82.2	32.0
	-12.6	-13.0	87.2	27.5	87.2	28.9	87.2	30.3	87.2	31.0	87.2	31.7	87.2	33.1
	-10.5	-11.0	92.4	28.8	92.4	30.2	92.4	31.5	92.4	32.1	92.4	32.8	92.4	34.0
	-9.5	-10.0	95.7	29.5	95.7	30.7	95.7	32.0	95.7	32.7	95.7	33.3	95.7	34.6
	-8.5	-9.1	98.4	30.0	98.4	31.2	98.4	32.5	98.4	33.1	98.4	33.7	98.4	35.0
	-7.0	-7.6	102.5	30.8	102.5	32.0	102.5	33.2	102.5	33.9	102.5	34.3	102.5	35.6
	-5.0	-5.6	107.8	31.8	107.8	32.9	107.8	34.0	107.8	34.6	107.8	35.2	107.8	36.3
	-3.0	-3.7	112.8	32.7	112.8	33.6	112.8	34.9	112.8	35.5	112.8	35.9	112.8	37.2
	0.0	-0.7	120.3	33.9	120.3	34.9	120.3	35.9	120.3	36.5	120.3	36.9	120.3	37.9
	3.0	2.2	127.2	34.9	127.2	35.8	127.2	36.8	127.2	37.2	127.2	37.8	127.2	38.8
	5.0	4.1	132.4	35.5	132.4	36.5	132.4	37.4	132.4	37.8	132.4	38.5	132.4	39.1
	7.0	6.0	137.5	36.1	137.5	37.1	137.5	37.8	137.5	38.4	137.5	38.8	137.5	39.7
	9.0	7.9	142.5	36.5	142.5	37.4	142.5	38.4	142.5	38.8	142.5	39.1	142.5	40.1
	11.0	9.8	147.9	37.1	147.9	37.8	147.9	38.8	147.9	39.1	147.9	39.7	147.9	40.4
	13.0	11.8	152.7	37.4	152.7	38.4	152.7	39.1	152.7	39.7	152.7	40.1	152.7	40.8
	15.0	13.7	157.5	38.0	157.3	38.7	157.3	39.5	157.3	40.1	157.3	40.4	155.5	40.6
	19.0	14.2	157.5	38.5	157.3	39.2	157.3	39.9	157.3	40.4	157.3	40.8	155.5	39.7
	21.0	15.0	157.5	38.9	157.3	39.7	157.3	40.2	157.3	40.7	157.3	40.4	155.5	38.9
120	-14.7	-15.0	82.2	28.0	82.2	29.4	82.2	30.7	82.2	31.4	82.2	32.1	82.2	33.5
	-12.6	-13.0	87.2	29.4	87.2	30.7	87.2	32.0	87.2	32.6	87.2	33.2	87.2	34.7
	-10.5	-11.0	92.4	30.6	92.4	31.8	92.4	33.1	92.4	33.7	92.4	34.3	92.4	35.6
	-9.5	-10.0	95.7	31.2	95.7	32.4	95.7	33.6	95.7	34.0	95.7	34.7	95.7	36.0
	-8.5	-9.1	98.4	31.7	98.4	32.8	98.4	34.0	98.4	34.6	98.4	35.2	98.4	36.3
	-7.0	-7.6	102.5	32.4	102.5	33.6	102.5	34.6	102.5	35.2	102.5	35.6	102.5	37.0
	-5.0	-5.6	107.8	33.3	107.8	34.3	107.8	35.5	107.8	35.9	107.8	36.6	107.8	37.5
	-3.0	-3.7	112.8	34.2	112.8	35.2	112.8	36.2	112.8	36.6	112.8	37.2	112.8	38.2
	0.0	-0.7	120.3	35.2	120.3	36.2	120.3	37.2	120.3	37.5	120.3	38.1	120.3	38.5
	3.0	2.2	127.2	36.2	127.2	37.1	127.2	38.1	127.2	38.5	127.2	38.8	127.2	39.8
	5.0	4.1	132.4	36.8	132.4	37.5	132.4	38.5	132.4	38.8	132.4	39.4	132.4	40.2
	7.0	6.0	137.5	37.2	137.5	38.1	137.5	39.0	137.5	39.4	137.5	39.7	137.5	40.8
	9.0	7.9	142.5	37.8	142.5	38.5	142.5	39.4	142.5	39.7	142.5	40.1	142.8	41.1
	11.0	9.8	147.9	38.1	147.9	39.0	147.9	39.7	147.9	40.1	147.9	40.4	143.8	39.9
	13.0	11.8	152.7	38.7	152.7	39.4	152.7	40.1	152.7	40.4	152.7	41.0	143.8	38.6
	15.0	13.7	157.3	39.0	157.3	39.7	157.3	40.4	157.3	40.8	154.3	40.3	143.8	37.0
	19.0	14.2	157.3	39.6	157.3	40.3	157.3	40.7	157.3	40.4	154.3	39.5	143.8	36.2
	21.0	15.0	157.3	40.1	157.3	40.3	157.3	40.4	157.3	39.9	154.3	38.2	143.8	35.6
110	-14.7	-15.0	82.2	30.0	82.2	31.3	82.2	32.5	82.2	33.1	82.2	33.8	82.2	35.1
	-12.6	-13.0	87.2	31.3	87.2	32.5	87.2	33.7	87.2	34.4	87.2	34.8	87.2	36.0
	-10.5	-11.0	92.4	32.4	92.4	33.4	92.4	34.7	92.4	35.3	92.4	35.7	92.4	37.0
	-9.5	-10.0	95.7	32.9	95.7	34.0	95.7	35.0	95.7	35.6	95.7	36.3	95.7	37.3
	-8.5	-9.1	98.4	33.3	98.4	34.4	98.4	35.6	98.4	36.0	98.4	36.6	98.4	37.6
	-7.0	-7.6	102.5	34.0	102.5	35.0	102.5	36.0	102.5	36.6	102.5	37.2	102.5	38.2
	-5.0	-5.6	107.8	34.9	107.8	35.9	107.8	36.9	107.8	37.3	107.8	37.9	107.8	38.8
	-3.0	-3.7	112.8	35.6	112.8	36.6	112.8	37.5	112.8	37.9	112.8	38.6	112.8	39.2
	0.0	-0.7	120.3	36.6	120.3	37.5	120.3	38.5	120.3	38.8	120.3	39.1	120.3	40.2
	3.0	2.2	127.2	37.5	127.2	38.5	127.2	39.1	127.2	39.5	127.2	40.1	127.2	40.8
	5.0	4.1	132.4	38.1	132.4	38.8	132.4	39.5	132.4	40.1	132.4	40.4	131.8	40.8
	7.0	6.0	137.5	38.5	137.5	39.1	137.5	40.1	137.5	40.4	137.5	40.8	131.8	39.0
	9.0	7.9	142.5	39.0	142.5	39.7	142.5	40.4	142.5	40.8	141.4	40.6	131.8	37.5
	11.0	9.8	147.9	39.4	147.9	40.1	147.9	40.8	146.3	40.9	141.4	39.2	131.8	36.2

heating

capacity factor(%)	outdoor temp.		indoor temp.℃WB											
			16.0		18.0		20.0		21.0		22.0		24.0	
			TC	PI	TC	PI	TC	PI	TC	PI	TC	PI	TC	PI
	℃DB	℃WB	KW	KW	KW	KW	KW	KW	KW	KW	KW	KW	KW	KW
110	13.0	11.8	152.7	39.7	152.7	40.4	151.1	40.6	146.3	39.2	141.4	37.6	131.8	34.9
	15.0	13.7	157.5	40.1	157.5	40.8	151.3	39.2	146.3	37.9	141.4	36.3	131.8	33.6
	19.0	14.2	157.5	38.4	157.5	40.3	151.3	37.9	146.3	36.3	141.4	34.9	131.8	32.6
	21.0	15.0	157.5	38.4	157.5	39.1	151.3	36.1	146.3	35.2	141.4	34.0	131.8	32.1
100	-14.7	-15.0	82.2	32.0	82.2	33.2	82.2	34.4	82.2	34.8	82.2	35.4	82.2	36.6
	-12.6	-13.0	87.2	33.2	87.2	34.4	87.2	35.3	87.2	35.7	87.2	36.4	87.2	37.4
	-10.5	-11.0	92.4	34.3	92.4	35.3	92.4	36.3	92.4	36.7	92.4	37.3	92.4	38.2
	-9.5	-10.0	95.7	34.7	95.7	35.6	95.7	36.6	95.7	37.2	95.7	37.6	95.7	38.6
	-8.5	-9.1	98.4	35.0	98.4	36.0	98.4	37.0	98.4	37.5	98.4	38.0	98.4	38.9
	-7.0	-7.6	102.5	35.6	102.5	36.6	102.5	37.5	102.5	38.0	102.5	38.6	102.5	39.5
	-5.0	-5.6	107.8	36.5	107.8	37.3	107.8	38.2	107.8	38.6	107.8	39.1	107.8	39.9
	-3.0	-3.7	112.8	37.2	112.8	37.9	112.8	38.8	112.8	39.1	112.8	39.6	112.8	40.5
	0.0	-0.7	120.3	38.1	120.3	38.8	120.3	39.5	120.3	40.1	120.3	40.4	119.4	40.9
	3.0	2.2	127.2	38.8	127.2	39.5	127.2	40.4	127.2	40.8	127.2	41.1	119.8	38.4
	5.0	4.1	132.4	39.1	132.4	40.1	132.4	40.8	132.4	41.1	131.3	39.7	119.8	36.7
	7.0	6.0	137.5	39.7	137.5	40.4	137.5	41.1	133.0	39.5	128.7	38.1	119.8	35.1
	9.0	7.9	142.5	40.1	142.3	40.8	137.5	39.5	133.0	38.1	128.7	36.5	119.8	33.8
	11.0	9.8	147.9	40.4	146.2	40.9	137.5	37.9	133.0	36.6	128.7	35.2	119.8	33.6
	13.0	11.8	152.7	40.8	146.2	39.1	137.5	36.6	133.0	35.2	128.7	33.9	119.8	31.4
	15.0	13.7	155.1	40.3	146.2	37.9	137.5	35.2	133.0	33.9	128.7	32.8	119.8	30.3
	19.0	14.2	155.1	39.1	146.2	36.6	137.5	34.4	133.0	32.5	128.7	31.3	119.8	29.3
	21.0	15.0	155.1	38.0	146.2	35.1	137.5	33.1	133.0	31.8	128.7	30.2	119.8	28.5
90	-14.7	-15.0	82.2	34.1	82.2	35.1	82.2	36.1	82.2	36.7	82.2	37.1	82.2	38.0
	-12.6	-13.0	87.2	35.1	87.2	36.0	87.2	37.0	87.2	37.4	87.2	37.9	87.2	38.9
	-10.5	-11.0	92.4	36.0	92.4	37.0	92.4	37.9	92.4	38.3	92.4	38.6	92.4	39.5
	-9.5	-10.0	95.7	36.3	95.7	37.3	95.7	38.3	95.7	38.7	95.7	38.9	95.7	39.9
	-8.5	-9.1	98.4	36.6	98.4	37.6	98.4	38.7	98.4	39.0	98.4	39.2	98.4	40.3
	-7.0	-7.6	102.5	37.3	102.5	38.2	102.5	39.0	102.5	39.6	102.5	39.9	102.5	40.6
	-5.0	-5.6	107.8	37.9	107.8	38.8	107.8	39.6	107.8	39.9	107.8	40.5	106.4	40.8
	-3.0	-3.7	112.8	38.6	112.8	39.5	112.8	40.2	112.8	40.5	112.8	40.9	107.8	39.3
	0.0	-0.7	120.3	39.5	120.3	40.2	120.3	40.9	119.4	40.8	115.7	39.4	107.8	36.1
	3.0	2.2	127.2	40.2	128.2	40.8	123.7	39.6	119.6	38.4	115.7	36.7	107.8	34.0
	5.0	4.1	132.4	40.5	131.4	40.8	123.7	38.0	119.6	36.7	115.7	35.1	107.8	32.6
	7.0	6.0	137.5	40.9	131.4	39.1	123.7	36.5	119.6	35.1	115.7	33.8	107.8	31.3
	9.0	7.9	139.6	40.2	131.4	37.5	123.7	35.1	119.6	33.8	115.7	32.6	107.8	30.1
	11.0	9.8	139.6	38.6	131.4	36.2	123.7	33.8	119.6	32.6	115.7	31.4	107.8	29.1
	13.0	11.8	139.6	37.2	131.4	34.9	123.7	32.5	119.6	31.4	115.7	30.3	107.8	28.1
	15.0	13.7	139.6	35.9	131.4	33.6	123.7	31.4	119.6	30.3	115.7	29.3	107.8	27.1
	19.0	14.2	139.6	34.9	131.4	32.6	123.7	30.4	119.6	29.3	115.7	28.1	107.8	26.0
	21.0	15.0	139.6	33.6	131.4	31.2	123.7	29.7	119.6	28.3	115.7	27.0	107.8	25.0
80	-14.7	-15.0	82.2	36.0	82.2	37.1	82.2	38.0	82.2	38.3	82.2	38.7	82.2	39.6
	-12.6	-13.0	87.2	37.0	87.2	37.7	87.2	38.7	87.2	39.0	87.2	39.6	87.2	40.3
	-10.5	-11.0	92.4	37.6	92.4	38.6	92.4	39.2	92.4	39.8	92.4	40.3	92.5	40.8
	-9.5	-10.0	95.7	38.2	95.7	38.9	95.7	39.6	95.7	40.2	95.7	40.5	94.7	40.7
	-8.5	-9.1	98.4	38.6	98.4	39.2	98.4	39.9	98.4	40.5	98.4	40.9	95.7	39.8
	-7.0	-7.6	102.5	38.9	102.5	39.6	102.5	40.5	102.5	40.9	101.0	40.8	95.7	38.1
	-5.0	-5.6	107.8	39.6	107.8	40.2	107.8	40.9	106.2	40.7	102.8	39.1	95.7	36.1
	-3.0	-3.7	112.8	40.2	112.8	40.9	110.0	40.1	106.2	38.5	102.8	37.2	95.7	34.3
	0.0	-0.7	120.3	40.9	116.8	39.8	110.0	37.3	106.2	35.9	102.8	34.4	95.7	31.9
	3.0	2.2	124.0	39.7	116.8	37.3	110.0	34.8	106.2	33.4	102.8	32.3	95.7	29.9
	5.0	4.1	124.0	38.1	116.8	35.7	110.0	33.4	106.2	32.1	102.8	31.0	95.7	28.7
	7.0	6.0	124.0	36.5	116.8	34.2	110.0	32.0	106.2	30.9	102.8	29.8	95.7	27.6
	9.0	7.9	124.0	35.1	116.8	32.9	110.0	30.8	106.2	29.7	102.8	28.7	95.7	26.6
	11.0	9.8	124.0	33.9	116.8	31.7	110.0	29.7	106.2	28.7	102.8	27.7	95.7	25.7
	13.0	11.8	124.0	32.6	116.8	30.6	110.0	28.6	106.2	27.6	102.8	26.7	95.7	24.8
	15.0	13.7	124.0	31.5	116.8	29.3	110.0	27.7	106.2	26.8	102.8	25.8	95.7	24.0
	19.0	14.2	124.0	30.4	116.8	28.7	110.0	26.7	106.2	25.7	102.8	24.8	95.7	23.3
	21.0	15.0	124.0	29.5	116.8	27.6	110.0	25.8	106.2	24.8	102.8	23.8	95.7	22.1

heating

capacity factor(%)	outdoor temp.		indoor temp.℃WB											
			16.0		18.0		20.0		21.0		22.0		24.0	
			TC	PI	TC	PI	TC	PI	TC	PI	TC	PI	TC	PI
	℃DB	℃WB	KW	KW	KW	KW	KW	KW	KW	KW	KW	KW	KW	KW
70	-14.7	-15.0	82.2	38.0	82.2	38.9	82.2	39.7	82.2	40.0	82.2	40.4	81.5	40.7
	-12.6	-13.0	87.2	38.9	87.2	39.6	87.2	40.3	87.2	40.6	86.9	40.8	83.9	38.9
	-10.5	-11.0	92.4	39.5	92.4	40.3	92.6	40.8	91.7	40.5	89.9	39.3	83.9	36.4
	-9.5	-10.0	95.7	39.8	95.7	40.5	94.8	40.7	92.9	39.6	89.9	38.1	83.9	35.1
	-8.5	-9.1	98.4	40.2	98.4	40.9	96.2	39.9	92.9	38.5	89.9	37.0	83.9	34.4
	-7.0	-7.6	102.5	40.5	100.9	40.7	96.2	38.4	92.9	36.8	89.9	35.5	83.9	32.8
	-5.0	-5.6	106.6	41.0	102.3	38.8	96.2	36.2	92.9	34.9	89.9	33.6	83.9	31.2
	-3.0	-3.7	108.4	39.5	102.3	36.9	96.2	34.6	92.9	33.3	89.9	32.0	83.9	29.7
	0.0	-0.7	108.4	36.6	102.3	34.3	96.2	32.0	92.9	30.9	89.9	29.8	83.9	27.7
	3.0	2.2	108.4	34.4	102.3	32.1	96.2	30.0	92.9	29.0	89.9	28.0	83.9	26.0
	5.0	4.1	108.4	32.9	102.3	30.8	96.2	28.8	92.9	27.8	89.9	26.9	83.9	25.0
	7.0	6.0	108.4	31.6	102.3	29.6	96.2	27.8	92.9	26.8	89.9	25.9	83.9	24.1
	9.0	7.9	108.4	30.4	102.3	28.6	96.2	26.8	92.9	25.8	89.9	25.0	83.9	23.3
	11.0	9.8	108.4	29.3	102.3	27.5	96.2	25.8	92.9	25.0	89.9	24.0	83.9	22.5
	13.0	11.8	108.4	28.2	102.3	26.6	96.2	24.9	92.9	24.1	89.9	23.3	83.9	21.7
	15.0	13.7	108.4	27.3	102.3	25.7	96.2	24.2	92.9	23.3	89.9	22.6	83.9	21.1
	19.0	14.2	108.4	26.1	102.3	24.9	96.2	23.4	92.9	22.5	89.9	21.4	83.9	20.3
	21.0	15.0	108.4	25.1	102.3	23.6	96.2	22.3	92.9	21.2	89.9	20.3	83.9	19.1
60	-14.7	-15.0	82.2	40.0	82.2	40.6	81.0	40.5	79.8	39.0	77.2	37.7	71.7	34.8
	-12.6	-13.0	87.2	40.6	86.3	40.5	82.4	37.9	79.8	36.5	77.2	35.2	71.7	32.6
	-10.5	-11.0	91.7	40.5	87.5	38.3	82.4	35.7	79.8	34.4	77.2	33.1	71.7	30.6
	-9.5	-10.0	92.9	39.6	87.5	37.0	82.4	34.6	79.8	33.4	77.2	32.1	71.7	29.7
	-8.5	-9.1	92.9	38.5	87.5	36.1	82.4	33.7	79.8	32.5	77.2	31.3	71.7	29.0
	-7.0	-7.6	92.9	36.8	87.5	34.5	82.4	32.3	79.8	31.1	77.2	30.1	71.7	27.9
	-5.0	-5.6	92.9	34.9	87.5	32.7	82.4	30.6	79.8	29.5	77.2	28.5	71.7	26.5
	-3.0	-3.7	92.9	33.3	87.5	31.2	82.4	29.2	79.8	28.2	77.2	27.2	71.7	25.3
	0.0	-0.7	92.9	30.9	87.5	29.0	82.4	27.2	79.8	26.3	77.2	25.4	71.7	23.6
	3.0	2.2	92.9	29.0	87.5	27.2	82.4	25.6	79.8	24.7	77.2	23.9	71.7	22.3
	5.0	4.1	92.9	27.8	87.5	26.2	82.4	24.6	79.8	23.8	77.2	23.0	71.7	21.4
	7.0	6.0	92.9	26.8	87.5	25.2	82.4	23.7	79.8	22.9	77.2	22.2	71.7	20.7
	9.0	7.9	92.9	25.8	87.5	24.4	82.4	22.9	79.8	22.2	77.2	21.4	71.7	20.0
	11.0	9.8	92.9	25.0	87.5	23.5	82.4	22.1	79.8	21.4	77.2	20.7	71.7	19.4
	13.0	11.8	92.9	24.1	87.5	22.7	82.4	21.4	79.8	20.7	77.2	20.1	71.7	18.8
	15.0	13.7	92.9	23.3	87.5	22.0	82.4	20.7	79.8	20.1	77.2	19.5	71.7	18.2
	19.0	14.2	92.9	22.6	87.5	21.0	82.4	20.0	79.8	19.3	77.2	18.7	71.7	17.4
	21.0	15.0	92.9	21.6	87.5	20.3	82.4	19.1	79.8	18.7	77.2	18.0	71.7	16.7
50	-14.7	-15.0	77.5	37.8	72.9	35.5	68.7	33.2	66.5	32.0	64.3	30.8	59.7	28.6
	-12.6	-13.0	77.5	35.5	72.9	33.3	68.7	31.0	66.5	30.0	64.3	28.9	59.7	26.9
	-10.5	-11.0	77.5	33.3	72.9	31.2	68.7	29.2	66.5	28.2	64.3	27.2	59.7	25.3
	-9.5	-10.0	77.5	32.3	72.9	30.3	68.7	28.4	66.5	27.4	64.3	26.5	59.7	24.6
	-8.5	-9.1	77.5	31.5	72.9	29.5	68.7	27.7	66.5	26.7	64.3	25.8	59.7	24.0
	-7.0	-7.6	77.5	30.2	72.9	28.4	68.7	26.6	66.5	25.7	64.3	24.8	59.7	23.1
	-5.0	-5.6	77.5	28.7	72.9	27.0	68.7	25.3	66.5	24.4	64.3	23.6	59.7	22.0
	-3.0	-3.7	77.5	27.3	72.9	25.7	68.7	24.2	66.5	23.4	64.3	22.6	59.7	21.1
	0.0	-0.7	77.5	25.5	72.9	24.1	68.7	22.6	66.5	21.9	64.3	21.2	59.7	19.8
	3.0	2.2	77.5	24.0	72.9	22.6	68.7	21.3	66.5	20.6	64.3	20.0	59.7	18.7
	5.0	4.1	77.5	23.1	72.9	21.8	68.7	20.6	66.5	19.9	64.3	19.5	59.7	18.1
	7.0	6.0	77.5	22.3	72.9	21.0	68.7	19.8	66.5	19.2	64.3	18.6	59.7	17.5
	9.0	7.9	77.5	21.5	72.9	20.3	68.7	19.2	66.5	18.6	64.3	18.0	59.7	16.9
	11.0	9.8	77.5	20.8	72.9	19.7	68.7	18.6	66.5	18.0	64.3	17.5	59.7	16.4
	13.0	11.8	77.5	20.1	72.9	19.0	68.7	18.0	66.5	17.5	64.3	16.9	59.7	15.9
	15.0	13.7	77.5	19.5	72.9	18.5	68.7	17.5	66.5	17.0	64.3	16.4	59.7	15.5
	19.0	14.2	77.5	18.9	72.9	17.8	68.7	16.8	66.5	16.2	64.3	15.8	59.7	14.9
	21.0	15.0	77.5	17.9	72.9	17.1	68.7	16.3	66.5	15.6	64.3	15.2	59.7	14.3

20) 46HP capacity

heating

capacity factor(%)	outdoor temp.		indoor temp.℃WB											
			16.0		18.0		20.0		21.0		22.0		24.0	
			TC	PI	TC	PI	TC	PI	TC	PI	TC	PI	TC	PI
	℃DB	℃WB	KW	KW	KW	KW	KW	KW	KW	KW	KW	KW	KW	KW
130	-14.7	-15.0	85.4	27.4	85.4	29.0	85.4	30.6	85.4	31.4	85.4	32.2	85.4	33.9
	-12.6	-13.0	90.8	29.1	90.8	30.6	90.8	32.1	90.8	32.9	90.8	33.6	90.8	35.1
	-10.5	-11.0	96.6	30.6	96.6	32.0	96.6	33.4	96.6	34.1	96.6	34.9	96.6	36.2
	-9.5	-10.0	99.8	31.3	99.8	32.6	99.8	34.0	99.8	34.7	99.8	35.4	99.8	36.9
	-8.5	-9.1	102.1	31.8	102.1	33.2	102.1	34.6	102.1	35.2	102.1	35.8	102.1	37.3
	-7.0	-7.6	106.2	32.8	106.2	34.1	106.2	35.4	106.2	36.2	106.2	36.5	106.2	38.0
	-5.0	-5.6	112.0	33.9	112.0	35.1	112.0	36.2	112.0	36.9	112.0	37.6	112.0	38.7
	-3.0	-3.7	117.4	34.8	117.4	35.8	117.4	37.3	117.4	38.0	117.4	38.3	117.4	39.7
	0.0	-0.7	126.0	36.2	126.0	37.3	126.0	38.3	126.0	39.0	126.0	39.4	126.0	40.5
	3.0	2.2	134.1	37.3	134.1	38.3	134.1	39.4	134.1	39.7	134.1	40.5	134.1	41.5
	5.0	4.1	139.5	38.0	139.5	39.0	139.5	40.1	139.5	40.5	139.5	41.2	139.5	41.9
	7.0	6.0	145.0	38.7	145.0	39.7	145.0	40.5	145.0	41.2	145.0	41.5	145.0	42.6
	9.0	7.9	150.2	39.0	150.2	40.1	150.2	41.2	150.2	41.5	150.2	41.9	150.2	42.9
	11.0	9.8	155.6	39.7	155.6	40.5	155.6	41.5	155.6	41.9	155.6	42.6	155.6	43.3
	13.0	11.8	160.6	40.1	160.6	41.2	160.6	41.9	160.6	42.6	160.6	42.9	160.6	43.6
	15.0	13.7	166.8	40.8	166.6	41.5	166.6	42.2	166.6	42.9	166.6	43.3	164.2	43.3
	19.0	14.2	166.8	41.2	166.6	42.0	166.6	42.6	166.6	43.3	166.6	43.7	164.2	42.4
	21.0	15.0	166.8	41.5	166.6	42.4	166.6	43.0	166.6	43.6	166.6	43.0	164.2	42.0
120	-14.7	-15.0	85.4	29.6	85.4	31.0	85.4	32.5	85.4	33.3	85.4	34.0	85.4	35.5
	-12.6	-13.0	90.8	31.1	90.8	32.5	90.8	33.9	90.8	34.6	90.8	35.3	90.8	36.9
	-10.5	-11.0	96.6	32.5	96.6	33.8	96.6	35.1	96.6	35.8	96.6	36.5	96.6	38.0
	-9.5	-10.0	99.8	33.1	99.8	34.4	99.8	35.8	99.8	36.2	99.8	36.9	99.8	38.3
	-8.5	-9.1	102.1	33.7	102.1	34.9	102.1	36.2	102.1	36.9	102.1	37.6	102.1	38.7
	-7.0	-7.6	106.2	34.5	106.2	35.8	106.2	36.9	106.2	37.6	106.2	38.0	106.2	39.4
	-5.0	-5.6	112.0	35.5	112.0	36.5	112.0	38.0	112.0	38.3	112.0	39.0	112.0	40.1
	-3.0	-3.7	117.4	36.5	117.4	37.6	117.4	38.7	117.4	39.0	117.4	39.7	117.4	40.8
	0.0	-0.7	126.0	37.6	126.0	38.7	126.0	39.7	126.0	40.1	126.0	40.8	126.0	41.9
	3.0	2.2	134.1	38.7	134.1	39.7	134.1	40.8	134.1	41.2	134.1	41.5	134.1	42.6
	5.0	4.1	139.5	39.4	139.5	40.1	139.5	41.2	139.5	41.5	139.5	42.2	139.5	42.9
	7.0	6.0	145.0	39.7	145.0	40.8	145.0	41.9	145.0	42.2	145.0	42.6	145.0	43.6
	9.0	7.9	150.2	40.5	150.2	41.2	150.2	42.2	150.2	42.6	150.2	42.9	150.2	44.0
	11.0	9.8	155.6	40.8	155.6	41.9	155.6	42.6	155.6	42.9	155.6	43.3	151.7	42.6
	13.0	11.8	160.6	41.5	160.6	42.2	160.6	42.9	160.6	43.3	160.6	44.0	151.7	41.2
	15.0	13.7	166.6	41.9	166.6	42.6	166.6	43.3	166.6	43.6	162.7	42.9	151.7	39.4
	19.0	14.2	166.6	42.2	166.6	42.9	166.6	43.3	166.6	43.2	162.7	42.2	151.7	38.4
	21.0	15.0	166.6	42.6	166.6	43.3	166.6	43.6	166.6	42.9	162.7	40.9	151.7	37.7
110	-14.7	-15.0	85.4	31.7	85.4	33.1	85.4	34.4	85.4	35.1	85.4	35.8	85.4	37.3
	-12.6	-13.0	90.8	33.2	90.8	34.5	90.8	35.8	90.8	36.5	90.8	36.9	90.8	38.3
	-10.5	-11.0	96.6	34.4	96.6	35.5	96.6	36.9	96.6	37.6	96.6	38.0	96.6	39.4
	-9.5	-10.0	99.8	35.0	99.8	36.2	99.8	37.3	99.8	38.0	99.8	38.7	99.8	39.7
	-8.5	-9.1	102.1	35.5	102.1	36.5	102.1	38.0	102.1	38.3	102.1	39.0	102.1	40.1
	-7.0	-7.6	106.2	36.2	106.2	37.3	106.2	38.3	106.2	39.0	106.2	39.7	106.2	40.8
	-5.0	-5.6	112.0	37.3	112.0	38.3	112.0	39.4	112.0	39.7	112.0	40.5	112.0	41.5
	-3.0	-3.7	117.4	38.0	117.4	39.0	117.4	40.1	117.4	40.5	117.4	41.2	117.4	41.9
	0.0	-0.7	126.0	39.0	126.0	40.1	126.0	41.2	126.0	41.5	126.0	41.9	126.0	42.9
	3.0	2.2	134.1	40.1	134.1	41.2	134.1	41.9	134.1	42.2	134.1	42.9	134.1	43.6
	5.0	4.1	139.5	40.8	139.5	41.5	139.5	42.2	139.5	42.9	139.5	43.3	139.0	43.6
	7.0	6.0	145.0	41.2	145.0	41.9	145.0	42.9	145.0	43.3	145.0	43.6	139.0	41.9
	9.0	7.9	150.2	41.9	150.2	42.6	150.2	43.3	150.2	43.6	149.1	43.6	139.0	40.1
	11.0	9.8	155.6	42.2	155.6	42.9	155.6	43.6	154.3	43.6	149.1	41.9	139.0	38.7

heating

capacity factor(%)	outdoor temp.		indoor temp.℃WB											
			16.0		18.0		20.0		21.0		22.0		24.0	
			TC	PI	TC	PI	TC	PI	TC	PI	TC	PI	TC	PI
	℃DB	℃WB	KW	KW	KW	KW	KW	KW	KW	KW	KW	KW	KW	KW
110	13.0	11.8	160.6	42.6	160.6	43.3	159.6	43.3	154.3	41.9	149.1	40.1	139.0	37.3
	15.0	13.7	166.8	42.9	166.8	43.6	159.6	41.9	154.3	40.5	149.1	38.7	139.0	35.8
	19.0	14.2	166.8	40.1	166.8	43.2	159.6	40.5	154.3	38.8	149.1	37.4	139.0	34.7
	21.0	15.0	166.8	40.5	166.8	42.0	159.6	38.3	154.3	37.7	149.1	36.3	139.0	34.2
100	-14.7	-15.0	85.4	33.9	85.4	35.2	85.4	36.5	85.4	36.9	85.4	37.6	85.4	39.0
	-12.6	-13.0	90.8	35.2	90.8	36.5	90.8	37.6	90.8	38.0	90.8	38.7	90.8	39.7
	-10.5	-11.0	96.6	36.5	96.6	37.6	96.6	38.7	96.6	39.0	96.6	39.7	96.6	40.8
	-9.5	-10.0	99.8	36.9	99.8	38.0	99.8	39.0	99.8	39.7	99.8	40.1	99.8	41.2
	-8.5	-9.1	102.1	37.3	102.1	38.3	102.1	39.4	102.1	40.1	102.1	40.5	102.1	41.5
	-7.0	-7.6	106.2	38.0	106.2	39.0	106.2	40.1	106.2	40.5	106.2	41.2	106.2	42.2
	-5.0	-5.6	112.0	39.0	112.0	39.7	112.0	40.8	112.0	41.2	112.0	41.9	112.0	42.6
	-3.0	-3.7	117.4	39.7	117.4	40.5	117.4	41.5	117.4	41.9	117.4	42.2	117.4	43.3
	0.0	-0.7	126.0	40.8	126.0	41.5	126.0	42.2	126.0	42.9	126.0	43.3	126.1	44.0
	3.0	2.2	134.1	41.5	134.1	42.2	134.1	43.3	134.1	43.6	134.1	44.0	126.5	41.2
	5.0	4.1	139.5	41.9	139.5	42.9	139.5	43.6	139.5	44.0	138.3	42.6	126.5	39.4
	7.0	6.0	145.0	42.6	145.0	43.3	145.0	44.0	140.4	42.2	135.7	40.8	126.5	37.6
	9.0	7.9	150.2	42.9	150.2	43.6	145.0	42.2	140.4	40.8	135.7	39.0	126.5	36.2
	11.0	9.8	155.6	43.3	154.3	43.6	145.0	40.5	140.4	39.0	135.7	37.6	126.5	34.8
	13.0	11.8	160.6	43.6	154.3	41.9	145.0	39.0	140.4	37.6	135.7	36.2	126.5	33.5
	15.0	13.7	163.5	42.9	154.3	40.5	145.0	37.6	140.4	36.2	135.7	34.9	126.5	32.3
	19.0	14.2	163.5	41.8	154.3	39.1	145.0	36.7	140.4	34.7	135.7	33.6	126.5	31.5
	21.0	15.0	163.5	40.5	154.3	37.4	145.0	35.3	140.4	34.2	135.7	32.6	126.5	30.8
90	-14.7	-15.0	85.4	36.2	85.4	37.3	85.4	38.3	85.4	39.0	85.4	39.4	85.4	40.5
	-12.6	-13.0	90.8	37.3	90.8	38.3	90.8	39.4	90.8	39.7	90.8	40.5	90.8	41.5
	-10.5	-11.0	96.6	38.3	96.6	39.4	96.6	40.5	96.6	40.8	96.6	41.2	96.6	42.2
	-9.5	-10.0	99.8	38.7	99.8	39.7	99.8	40.8	99.8	41.2	99.8	41.5	99.8	42.6
	-8.5	-9.1	102.1	39.0	102.1	40.1	102.1	41.2	102.1	41.5	102.1	41.9	102.1	42.9
	-7.0	-7.6	106.2	39.7	106.2	40.8	106.2	41.5	106.2	42.2	106.2	42.6	106.2	43.3
	-5.0	-5.6	112.0	40.5	112.0	41.5	112.0	42.2	112.0	42.6	112.0	43.3	112.0	44.0
	-3.0	-3.7	117.4	41.2	117.4	42.2	117.4	42.9	117.4	43.3	117.4	43.6	113.6	42.2
	0.0	-0.7	126.0	42.2	126.0	42.9	126.0	43.6	125.9	44.0	122.0	42.2	113.6	39.0
	3.0	2.2	134.1	42.9	134.1	43.6	130.6	42.6	126.1	41.2	122.0	39.4	113.6	36.5
	5.0	4.1	139.5	43.3	138.8	43.6	130.6	40.8	126.1	39.4	122.0	37.6	113.6	34.9
	7.0	6.0	145.0	43.6	138.8	41.9	130.6	39.0	126.1	37.6	122.0	36.2	113.6	33.5
	9.0	7.9	147.4	42.9	138.8	40.1	130.6	37.6	126.1	36.2	122.0	34.8	113.6	32.3
	11.0	9.8	147.4	41.2	138.8	38.7	130.6	36.2	126.1	34.8	122.0	33.5	113.6	31.1
	13.0	11.8	147.4	39.7	138.8	37.3	130.6	34.7	126.1	33.5	122.0	32.3	113.6	29.9
	15.0	13.7	147.4	38.3	138.8	35.8	130.6	33.5	126.1	32.3	122.0	31.2	113.6	28.9
	19.0	14.2	147.4	37.4	138.8	34.8	130.6	32.4	126.1	31.4	122.0	30.1	113.6	27.9
	21.0	15.0	147.4	36.0	138.8	33.5	130.6	31.8	126.1	30.3	122.0	29.0	113.6	26.7
80	-14.7	-15.0	85.4	38.3	85.4	39.4	85.4	40.5	85.4	40.8	85.4	41.2	85.4	42.2
	-12.6	-13.0	90.8	39.4	90.8	40.1	90.8	41.2	90.8	41.5	90.8	42.2	90.8	42.9
	-10.5	-11.0	96.6	40.1	96.6	41.2	96.6	41.9	96.6	42.6	96.6	42.9	96.6	43.6
	-9.5	-10.0	99.8	40.8	99.8	41.5	99.8	42.2	99.8	42.9	99.8	43.3	99.8	44.0
	-8.5	-9.1	102.1	41.2	102.1	41.9	102.1	42.6	102.1	43.3	102.1	43.6	100.9	43.3
	-7.0	-7.6	106.2	41.5	106.2	42.2	106.2	43.3	106.2	43.6	106.2	44.0	100.9	41.2
	-5.0	-5.6	112.0	42.2	112.0	42.9	112.0	43.6	112.0	44.0	108.5	42.2	100.9	39.0
	-3.0	-3.7	117.4	42.9	117.4	43.6	116.0	43.3	112.0	41.5	108.5	40.1	100.9	36.9
	0.0	-0.7	126.0	43.6	123.3	42.9	116.0	40.1	112.0	38.7	108.5	36.9	100.9	34.3
	3.0	2.2	130.9	42.6	123.3	40.1	116.0	37.3	112.0	35.8	108.5	34.6	100.9	32.1
	5.0	4.1	130.9	40.8	123.3	38.3	116.0	35.8	112.0	34.4	108.5	33.2	100.9	30.8
	7.0	6.0	130.9	39.0	123.3	36.5	116.0	34.2	112.0	33.1	108.5	31.9	100.9	29.6
	9.0	7.9	130.9	37.6	123.3	35.2	116.0	32.9	112.0	31.8	108.5	30.7	100.9	28.5
	11.0	9.8	130.9	36.2	123.3	33.9	116.0	31.7	112.0	30.7	108.5	29.6	100.9	27.5
	13.0	11.8	130.9	34.8	123.3	32.6	116.0	30.6	112.0	29.5	108.5	28.5	100.9	26.5
	15.0	13.7	130.9	33.6	123.3	31.2	116.0	29.5	112.0	28.5	108.5	27.6	100.9	25.7
	19.0	14.2	130.9	32.4	123.3	30.7	116.0	28.3	112.0	27.5	108.5	26.4	100.9	25.0
	21.0	15.0	130.9	31.5	123.3	29.4	116.0	27.6	112.0	26.6	108.5	25.5	100.9	23.7

heating

capacity factor(%)	outdoor temp.		indoor temp.℃WB											
			16.0		18.0		20.0		21.0		22.0		24.0	
			TC	PI	TC	PI	TC	PI	TC	PI	TC	PI	TC	PI
	℃DB	℃WB	KW	KW	KW	KW	KW	KW	KW	KW	KW	KW	KW	KW
70	-14.7	-15.0	85.4	40.5	85.4	41.5	85.4	42.2	85.4	42.6	85.4	42.9	85.4	44.0
	-12.6	-13.0	90.8	41.5	90.8	42.2	90.8	42.9	90.8	43.3	90.8	44.0	88.4	42.2
	-10.5	-11.0	96.6	42.2	96.6	42.9	96.6	43.6	96.6	44.0	94.9	42.6	88.4	39.4
	-9.5	-10.0	99.8	42.6	99.8	43.3	99.8	44.0	98.1	42.9	94.9	41.2	88.4	38.0
	-8.5	-9.1	102.1	42.9	102.1	43.6	101.6	43.3	98.1	41.9	94.9	40.1	88.4	37.3
	-7.0	-7.6	106.2	43.3	106.2	44.0	101.6	41.5	98.1	39.7	94.9	38.3	88.4	35.5
	-5.0	-5.6	112.0	44.0	107.9	41.9	101.6	39.0	98.1	37.6	94.9	36.2	88.4	33.6
	-3.0	-3.7	114.4	42.6	107.9	39.7	101.6	37.3	98.1	35.8	94.9	34.5	88.4	32.0
	0.0	-0.7	114.4	39.4	107.9	36.9	101.6	34.5	98.1	33.2	94.9	32.0	88.4	29.7
	3.0	2.2	114.4	36.9	107.9	34.5	101.6	32.2	98.1	31.1	94.9	30.0	88.4	27.9
	5.0	4.1	114.4	35.2	107.9	33.0	101.6	30.9	98.1	29.8	94.9	28.8	88.4	26.8
	7.0	6.0	114.4	33.8	107.9	31.7	101.6	29.7	98.1	28.7	94.9	27.7	88.4	25.8
	9.0	7.9	114.4	32.5	107.9	30.5	101.6	28.6	98.1	27.6	94.9	26.7	88.4	24.9
	11.0	9.8	114.4	31.3	107.9	29.4	101.6	27.6	98.1	26.7	94.9	25.6	88.4	24.0
	13.0	11.8	114.4	30.2	107.9	28.4	101.6	26.6	98.1	25.8	94.9	24.9	88.4	23.2
	15.0	13.7	114.4	29.1	107.9	27.4	101.6	25.8	98.1	24.9	94.9	24.1	88.4	22.5
	19.0	14.2	114.4	27.7	107.9	26.7	101.6	25.0	98.1	23.8	94.9	22.7	88.4	21.6
	21.0	15.0	114.4	26.7	107.9	25.4	101.6	23.9	98.1	22.7	94.9	21.6	88.4	20.4
60	-14.7	-15.0	85.4	42.6	85.4	43.3	85.4	44.0	84.1	42.6	81.5	41.2	75.7	38.0
	-12.6	-13.0	90.8	43.3	90.8	44.0	87.0	41.2	84.1	39.7	81.5	38.3	75.7	35.4
	-10.5	-11.0	96.6	44.0	92.3	41.5	87.0	38.7	84.1	37.3	81.5	35.8	75.7	33.2
	-9.5	-10.0	98.1	42.9	92.3	40.1	87.0	37.6	84.1	36.2	81.5	34.8	75.7	32.2
	-8.5	-9.1	98.1	41.9	92.3	39.0	87.0	36.5	84.1	35.2	81.5	33.9	75.7	31.4
	-7.0	-7.6	98.1	39.7	92.3	37.3	87.0	34.9	84.1	33.6	81.5	32.5	75.7	30.1
	-5.0	-5.6	98.1	37.6	92.3	35.3	87.0	33.0	84.1	31.9	81.5	30.7	75.7	28.5
	-3.0	-3.7	98.1	35.8	92.3	33.6	87.0	31.4	84.1	30.3	81.5	29.3	75.7	27.2
	0.0	-0.7	98.1	33.2	92.3	31.2	87.0	29.2	84.1	28.2	81.5	27.3	75.7	25.4
	3.0	2.2	98.1	31.1	92.3	29.2	87.0	27.4	84.1	26.5	81.5	25.6	75.7	23.9
	5.0	4.1	98.1	29.8	92.3	28.1	87.0	26.3	84.1	25.5	81.5	24.6	75.7	23.0
	7.0	6.0	98.1	28.7	92.3	27.0	87.0	25.4	84.1	24.6	81.5	23.7	75.7	22.1
	9.0	7.9	98.1	27.6	92.3	26.0	87.0	24.4	84.1	23.7	81.5	22.9	75.7	21.4
	11.0	9.8	98.1	26.7	92.3	25.1	87.0	23.6	84.1	22.9	81.5	22.1	75.7	20.7
	13.0	11.8	98.1	25.7	92.3	24.3	87.0	22.8	84.1	22.1	81.5	21.4	75.7	20.0
	15.0	13.7	98.1	24.9	92.3	23.5	87.0	22.1	84.1	21.4	81.5	20.8	75.7	19.4
	19.0	14.2	98.1	24.2	92.3	22.3	87.0	21.4	84.1	20.8	81.5	20.0	75.7	18.6
	21.0	15.0	98.1	23.2	92.3	21.7	87.0	20.5	84.1	20.1	81.5	19.3	75.7	17.9
50	-14.7	-15.0	81.7	41.2	76.9	38.7	72.5	36.2	70.1	34.8	67.8	33.6	63.0	31.1
	-12.6	-13.0	81.7	38.7	76.9	36.2	72.5	33.7	70.1	32.6	67.8	31.4	63.0	29.1
	-10.5	-11.0	81.7	36.2	76.9	33.9	72.5	31.7	70.1	30.6	67.8	29.5	63.0	27.4
	-9.5	-10.0	81.7	35.0	76.9	32.8	72.5	30.7	70.1	29.7	67.8	28.7	63.0	26.6
	-8.5	-9.1	81.7	34.1	76.9	32.0	72.5	29.9	70.1	28.9	67.8	27.9	63.0	26.0
	-7.0	-7.6	81.7	32.6	76.9	30.7	72.5	28.7	70.1	27.7	67.8	26.8	63.0	25.0
	-5.0	-5.6	81.7	30.9	76.9	29.1	72.5	27.3	70.1	26.4	67.8	25.5	63.0	23.7
	-3.0	-3.7	81.7	29.5	76.9	27.7	72.5	26.0	70.1	25.2	67.8	24.3	63.0	22.7
	0.0	-0.7	81.7	27.4	76.9	25.8	72.5	24.3	70.1	23.5	67.8	22.7	63.0	21.3
	3.0	2.2	81.7	25.7	76.9	24.3	72.5	22.9	70.1	22.1	67.8	21.4	63.0	20.0
	5.0	4.1	81.7	24.8	76.9	23.4	72.5	22.0	70.1	21.3	67.8	20.7	63.0	19.3
	7.0	6.0	81.7	23.8	76.9	22.5	72.5	21.2	70.1	20.6	67.8	19.9	63.0	18.7
	9.0	7.9	81.7	23.0	76.9	21.8	72.5	20.5	70.1	19.9	67.8	19.3	63.0	18.1
	11.0	9.8	81.7	22.2	76.9	21.0	72.5	19.9	70.1	19.3	67.8	18.7	63.0	17.5
	13.0	11.8	81.7	21.5	76.9	20.4	72.5	19.2	70.1	18.7	67.8	18.1	63.0	17.0
	15.0	13.7	81.7	20.9	76.9	19.8	72.5	18.7	70.1	18.1	67.8	17.6	63.0	16.5
	19.0	14.2	81.7	20.2	76.9	19.0	72.5	18.0	70.1	17.3	67.8	17.0	63.0	15.8
	21.0	15.0	81.7	18.9	76.9	18.4	72.5	17.5	70.1	16.6	67.8	16.3	63.0	15.2

21) 48HP capacity

heating

capacity factor(%)	outdoor temp.		indoor temp.℃WB											
			16.0		18.0		20.0		21.0		22.0		24.0	
			TC	PI	TC	PI	TC	PI	TC	PI	TC	PI	TC	PI
	℃DB	℃WB	KW	KW	KW	KW	KW	KW	KW	KW	KW	KW	KW	KW
130	-14.7	-15.0	87.9	28.0	87.9	29.6	87.9	31.3	87.9	32.1	87.9	33.0	87.9	34.6
	-12.6	-13.0	93.6	29.7	93.6	31.3	93.6	32.8	93.6	33.6	93.6	34.4	93.6	35.9
	-10.5	-11.0	99.6	31.2	99.6	32.7	99.6	34.2	99.6	34.9	99.6	35.7	99.6	37.0
	-9.5	-10.0	102.9	32.0	102.9	33.4	102.9	34.8	102.9	35.5	102.9	36.3	102.9	37.7
	-8.5	-9.1	105.3	32.6	105.3	34.0	105.3	35.3	105.3	36.0	105.3	36.7	105.3	38.1
	-7.0	-7.6	109.5	33.5	109.5	34.8	109.5	36.2	109.5	37.0	109.5	37.4	109.5	38.8
	-5.0	-5.6	115.5	34.6	115.5	35.9	115.5	37.0	115.5	37.7	115.5	38.5	115.5	39.6
	-3.0	-3.7	121.2	35.6	121.2	36.7	121.2	38.1	121.2	38.8	121.2	39.2	121.2	40.6
	0.0	-0.7	130.2	37.0	130.2	38.1	130.2	39.2	130.2	39.9	130.2	40.3	130.2	41.4
	3.0	2.2	138.6	38.1	138.6	39.2	138.6	40.3	138.6	40.6	138.6	41.4	138.6	42.5
	5.0	4.1	144.3	38.8	144.3	39.9	144.3	41.0	144.3	41.4	144.3	42.1	144.3	42.8
	7.0	6.0	150.0	39.6	150.0	40.6	150.0	41.4	150.0	42.1	150.0	42.5	150.0	43.5
	9.0	7.9	155.4	39.9	155.4	41.0	155.4	42.1	155.4	42.5	155.4	42.8	155.4	43.9
	11.0	9.8	161.1	40.6	161.1	41.4	161.1	42.5	161.1	42.8	161.1	43.5	161.1	44.3
	13.0	11.8	167.3	41.0	167.3	42.1	167.3	42.8	167.3	43.5	167.3	43.9	167.3	44.6
	15.0	13.7	172.8	41.7	172.5	42.5	172.5	43.2	172.5	43.9	172.5	44.3	169.8	44.3
	19.0	14.2	172.8	42.1	172.5	42.9	172.5	43.6	172.5	44.3	172.5	44.7	169.8	43.4
	21.0	15.0	172.8	42.4	172.5	43.3	172.5	44.0	172.5	44.6	172.5	44.0	169.8	42.9
120	-14.7	-15.0	87.9	30.2	87.9	31.8	87.9	33.3	87.9	34.0	87.9	34.8	87.9	36.3
	-12.6	-13.0	93.6	31.8	93.6	33.2	93.6	34.7	93.6	35.4	93.6	36.1	93.6	37.7
	-10.5	-11.0	99.6	33.2	99.6	34.6	99.6	35.9	99.6	36.7	99.6	37.4	99.6	38.8
	-9.5	-10.0	102.9	33.9	102.9	35.2	102.9	36.7	102.9	37.0	102.9	37.7	102.9	39.2
	-8.5	-9.1	105.3	34.4	105.3	35.7	105.3	37.0	105.3	37.7	105.3	38.5	105.3	39.6
	-7.0	-7.6	109.5	35.3	109.5	36.7	109.5	37.7	109.5	38.5	109.5	38.8	109.5	40.3
	-5.0	-5.6	115.5	36.3	115.5	37.4	115.5	38.8	115.5	39.2	115.5	39.9	115.5	41.0
	-3.0	-3.7	121.2	37.4	121.2	38.5	121.2	39.6	121.2	39.9	121.2	40.6	121.2	41.7
	0.0	-0.7	130.2	38.5	130.2	39.6	130.2	40.6	130.2	41.0	130.2	41.7	130.2	42.8
	3.0	2.2	138.6	39.6	138.6	40.6	138.6	41.7	138.6	42.1	138.6	42.5	138.6	43.5
	5.0	4.1	144.3	40.3	144.3	41.0	144.3	42.1	144.3	42.5	144.3	43.2	144.3	43.9
	7.0	6.0	150.0	40.6	150.0	41.7	150.0	42.8	150.0	43.2	150.0	43.5	150.0	44.6
	9.0	7.9	155.4	41.4	155.4	42.1	155.4	43.2	155.4	43.5	155.4	43.9	155.4	45.0
	11.0	9.8	161.1	41.7	161.1	42.8	161.1	43.5	161.1	43.9	161.1	44.3	156.9	43.5
	13.0	11.8	167.3	42.5	167.3	43.2	167.3	43.9	167.3	44.3	167.3	45.0	156.9	42.1
	15.0	13.7	172.5	42.8	172.5	43.5	172.5	44.3	172.5	44.6	168.3	43.9	156.9	40.3
	19.0	14.2	172.5	43.2	172.5	43.9	172.5	44.3	172.5	44.2	168.3	43.2	156.9	39.3
	21.0	15.0	172.5	43.6	172.5	44.3	172.5	44.6	172.5	43.9	168.3	41.9	156.9	38.6
110	-14.7	-15.0	87.9	32.4	87.9	33.9	87.9	35.2	87.9	35.9	87.9	36.7	87.9	38.1
	-12.6	-13.0	93.6	33.9	93.6	35.2	93.6	36.7	93.6	37.4	93.6	37.7	93.6	39.2
	-10.5	-11.0	99.6	35.2	99.6	36.3	99.6	37.7	99.6	38.5	99.6	38.8	99.6	40.3
	-9.5	-10.0	102.9	35.8	102.9	37.0	102.9	38.1	102.9	38.8	102.9	39.6	102.9	40.6
	-8.5	-9.1	105.3	36.3	105.3	37.4	105.3	38.8	105.3	39.2	105.3	39.9	105.3	41.0
	-7.0	-7.6	109.5	37.0	109.5	38.1	109.5	39.2	109.5	39.9	109.5	40.6	109.5	41.7
	-5.0	-5.6	115.5	38.1	115.5	39.2	115.5	40.3	115.5	40.6	115.5	41.4	115.5	42.5
	-3.0	-3.7	121.2	38.8	121.2	39.9	121.2	41.0	121.2	41.4	121.2	42.1	121.2	42.8
	0.0	-0.7	130.2	39.9	130.2	41.0	130.2	42.1	130.2	42.5	130.2	42.8	130.2	43.9
	3.0	2.2	138.6	41.0	138.6	42.1	138.6	42.8	138.6	43.2	138.6	43.9	138.6	44.6
	5.0	4.1	144.3	41.7	144.3	42.5	144.3	43.2	144.3	43.9	144.3	44.3	143.7	44.6
	7.0	6.0	150.0	42.1	150.0	42.8	150.0	43.9	150.0	44.3	150.0	44.6	143.7	42.8
	9.0	7.9	155.4	42.8	155.4	43.5	155.4	44.3	155.4	44.6	154.2	44.6	143.7	41.0
	11.0	9.8	161.1	43.2	161.1	43.9	161.1	44.6	159.6	44.6	154.2	42.8	143.7	39.6

heating

capacity factor(%)	outdoor temp.		indoor temp.℃WB											
			16.0		18.0		20.0		21.0		22.0		24.0	
			TC	PI	TC	PI	TC	PI	TC	PI	TC	PI	TC	PI
	℃DB	℃WB	KW	KW	KW	KW	KW	KW	KW	KW	KW	KW	KW	KW
110	13.0	11.8	167.3	43.5	167.3	44.3	165.0	44.3	159.6	42.8	154.2	41.0	143.7	38.1
	15.0	13.7	172.8	43.9	172.8	44.6	165.0	42.8	159.6	41.4	154.2	39.6	143.7	36.7
	19.0	14.2	172.8	41.0	172.8	44.2	165.0	41.4	159.6	39.7	154.2	38.2	143.7	35.5
	21.0	15.0	172.8	41.4	172.8	42.9	165.0	39.2	159.6	38.5	154.2	37.2	143.7	34.9
100	-14.7	-15.0	87.9	34.7	87.9	36.0	87.9	37.4	87.9	37.7	87.9	38.5	87.9	39.9
	-12.6	-13.0	93.6	36.0	93.6	37.4	93.6	38.5	93.6	38.8	93.6	39.6	93.6	40.6
	-10.5	-11.0	99.6	37.4	99.6	38.5	99.6	39.6	99.6	39.9	99.6	40.6	99.6	41.7
	-9.5	-10.0	102.9	37.7	102.9	38.8	102.9	39.9	102.9	40.6	102.9	41.0	102.9	42.1
	-8.5	-9.1	105.3	38.1	105.3	39.2	105.3	40.3	105.3	41.0	105.3	41.4	105.3	42.5
	-7.0	-7.6	109.5	38.8	109.5	39.9	109.5	41.0	109.5	41.4	109.5	42.1	109.5	43.2
	-5.0	-5.6	115.5	39.9	115.5	40.6	115.5	41.7	115.5	42.1	115.5	42.8	115.5	43.5
	-3.0	-3.7	121.2	40.6	121.2	41.4	121.2	42.5	121.2	42.8	121.2	43.2	121.2	44.3
	0.0	-0.7	130.2	41.7	130.2	42.5	130.2	43.2	130.2	43.9	130.2	44.3	130.2	45.0
	3.0	2.2	138.6	42.5	138.6	43.2	138.6	44.3	138.6	44.6	138.6	45.0	130.8	42.1
	5.0	4.1	144.3	42.8	144.3	43.9	144.3	44.6	144.3	45.0	144.3	43.5	130.8	40.3
	7.0	6.0	150.0	43.5	150.0	44.3	150.0	45.0	145.2	43.2	140.4	41.7	130.8	38.5
	9.0	7.9	155.4	43.9	155.4	44.6	150.0	43.2	145.2	41.7	140.4	39.9	130.8	37.0
	11.0	9.8	161.1	44.3	159.6	44.6	150.0	41.4	145.2	39.9	140.4	38.5	130.8	35.6
	13.0	11.8	167.3	44.6	159.6	42.8	150.0	39.9	145.2	38.5	140.4	37.0	130.8	34.3
	15.0	13.7	169.2	43.9	159.6	41.4	150.0	38.5	145.2	37.0	140.4	35.7	130.8	33.1
	19.0	14.2	169.2	42.8	159.6	40.0	150.0	37.5	145.2	35.5	140.4	34.3	130.8	32.2
	21.0	15.0	169.2	41.4	159.6	38.2	150.0	36.1	145.2	34.9	140.4	33.3	130.8	31.5
90	-14.7	-15.0	87.9	37.0	87.9	38.1	87.9	39.2	87.9	39.9	87.9	40.3	87.9	41.4
	-12.6	-13.0	93.6	38.1	93.6	39.2	93.6	40.3	93.6	40.6	93.6	41.4	93.6	42.5
	-10.5	-11.0	99.6	39.2	99.6	40.3	99.6	41.4	99.6	41.7	99.6	42.1	99.6	43.2
	-9.5	-10.0	102.9	39.6	102.9	40.6	102.9	41.7	102.9	42.1	102.9	42.5	102.9	43.5
	-8.5	-9.1	105.3	39.9	105.3	41.0	105.3	42.1	105.3	42.5	105.3	42.8	105.3	43.9
	-7.0	-7.6	109.5	40.6	109.5	41.7	109.5	42.5	109.5	43.2	109.5	43.5	109.5	44.3
	-5.0	-5.6	115.5	41.4	115.5	42.5	115.5	43.2	115.5	43.5	115.5	44.3	115.5	45.0
	-3.0	-3.7	121.2	42.1	121.2	43.2	121.2	43.9	121.2	44.3	121.2	44.6	117.6	43.2
	0.0	-0.7	130.2	43.2	130.2	43.9	130.2	44.6	130.2	45.0	126.3	43.2	117.6	39.9
	3.0	2.2	138.6	43.9	138.6	44.6	135.0	43.5	130.5	42.1	126.3	40.3	117.6	37.4
	5.0	4.1	144.3	44.3	143.4	44.6	135.0	41.7	130.5	40.3	126.3	38.5	117.6	35.7
	7.0	6.0	150.0	44.6	143.4	42.8	135.0	39.9	130.5	38.5	126.3	37.0	117.6	34.3
	9.0	7.9	152.3	43.9	143.4	41.0	135.0	38.5	130.5	37.0	126.3	35.6	117.6	33.0
	11.0	9.8	152.3	42.1	143.4	39.6	135.0	37.0	130.5	35.6	126.3	34.3	117.6	31.8
	13.0	11.8	152.3	40.6	143.4	38.1	135.0	35.5	130.5	34.2	126.3	33.0	117.6	30.6
	15.0	13.7	152.3	39.2	143.4	36.7	135.0	34.2	130.5	33.1	126.3	31.9	117.6	29.6
	19.0	14.2	152.3	38.2	143.4	35.6	135.0	33.1	130.5	32.1	126.3	30.8	117.6	28.5
	21.0	15.0	152.3	36.8	143.4	34.3	135.0	32.5	130.5	31.0	126.3	29.7	117.6	27.4
80	-14.7	-15.0	87.9	39.2	87.9	40.3	87.9	41.4	87.9	41.7	87.9	42.1	87.9	43.2
	-12.6	-13.0	93.6	40.3	93.6	41.0	93.6	42.1	93.6	42.5	93.6	43.2	93.6	43.9
	-10.5	-11.0	99.6	41.0	99.6	42.1	99.6	42.8	99.6	43.5	99.6	43.9	99.6	44.6
	-9.5	-10.0	102.9	41.7	102.9	42.5	102.9	43.2	102.9	43.9	102.9	44.3	102.9	45.0
	-8.5	-9.1	105.3	42.1	105.3	42.8	105.3	43.5	105.3	44.3	105.3	44.6	104.4	44.3
	-7.0	-7.6	109.5	42.5	109.5	43.2	109.5	44.3	109.5	44.6	109.5	45.0	104.4	42.1
	-5.0	-5.6	115.5	43.2	115.5	43.9	115.5	44.6	115.8	45.0	112.2	43.2	104.4	39.9
	-3.0	-3.7	121.2	43.9	121.2	44.6	120.0	44.3	115.8	42.5	112.2	41.0	104.4	37.7
	0.0	-0.7	130.2	44.6	127.5	43.9	120.0	41.0	115.8	39.6	112.2	37.7	104.4	35.1
	3.0	2.2	135.3	43.5	127.5	41.0	120.0	38.1	115.8	36.7	112.2	35.4	104.4	32.8
	5.0	4.1	135.3	41.7	127.5	39.2	120.0	36.7	115.8	35.2	112.2	33.9	104.4	31.5
	7.0	6.0	135.3	39.9	127.5	37.4	120.0	35.0	115.8	33.8	112.2	32.6	104.4	30.3
	9.0	7.9	135.3	38.5	127.5	36.0	120.0	33.7	115.8	32.5	112.2	31.4	104.4	29.1
	11.0	9.8	135.3	37.0	127.5	34.7	120.0	32.4	115.8	31.4	112.2	30.3	104.4	28.1
	13.0	11.8	135.3	35.6	127.5	33.4	120.0	31.2	115.8	30.2	112.2	29.1	104.4	27.1
	15.0	13.7	135.3	34.4	127.5	31.9	120.0	30.2	115.8	29.2	112.2	28.2	104.4	26.2
	19.0	14.2	135.3	33.2	127.5	31.4	120.0	29.0	115.8	28.1	112.2	27.0	104.4	25.6
	21.0	15.0	135.3	32.2	127.5	30.0	120.0	28.2	115.8	27.2	112.2	26.1	104.4	24.2

heating

capacity factor(%)	outdoor temp.		indoor temp.℃WB											
			16.0		18.0		20.0		21.0		22.0		24.0	
			TC	PI	TC	PI	TC	PI	TC	PI	TC	PI	TC	PI
	℃DB	℃WB	KW	KW	KW	KW	KW	KW	KW	KW	KW	KW	KW	KW
70	-14.7	-15.0	87.9	41.4	87.9	42.5	87.9	43.2	87.9	43.5	87.9	43.9	87.9	45.0
	-12.6	-13.0	93.6	42.5	93.6	43.2	93.6	43.9	93.6	44.3	93.6	45.0	91.5	43.2
	-10.5	-11.0	99.6	43.2	99.6	43.9	99.6	44.6	99.6	45.0	98.1	43.5	91.5	40.3
	-9.5	-10.0	102.9	43.5	102.9	44.3	102.9	45.0	101.4	43.9	98.1	42.1	91.5	38.8
	-8.5	-9.1	105.3	43.9	105.3	44.6	105.0	44.3	101.4	42.8	98.1	41.0	91.5	38.1
	-7.0	-7.6	109.5	44.3	109.5	45.0	105.0	42.5	101.4	40.6	98.1	39.2	91.5	36.3
	-5.0	-5.6	115.5	45.0	111.6	42.8	105.0	39.9	101.4	38.5	98.1	37.0	91.5	34.4
	-3.0	-3.7	118.2	43.5	111.6	40.6	105.0	38.1	101.4	36.7	98.1	35.3	91.5	32.7
	0.0	-0.7	118.2	40.3	111.6	37.7	105.0	35.2	101.4	34.0	98.1	32.8	91.5	30.4
	3.0	2.2	118.2	37.7	111.6	35.2	105.0	32.9	101.4	31.8	98.1	30.7	91.5	28.5
	5.0	4.1	118.2	36.0	111.6	33.8	105.0	31.6	101.4	30.5	98.1	29.5	91.5	27.4
	7.0	6.0	118.2	34.5	111.6	32.4	105.0	30.4	101.4	29.4	98.1	28.3	91.5	26.4
	9.0	7.9	118.2	33.2	111.6	31.2	105.0	29.3	101.4	28.3	98.1	27.3	91.5	25.4
	11.0	9.8	118.2	32.0	111.6	30.1	105.0	28.2	101.4	27.3	98.1	26.2	91.5	24.6
	13.0	11.8	118.2	30.8	111.6	29.0	105.0	27.2	101.4	26.3	98.1	25.4	91.5	23.7
	15.0	13.7	118.2	29.8	111.6	28.1	105.0	26.3	101.4	25.5	98.1	24.6	91.5	23.0
	19.0	14.2	118.2	28.3	111.6	27.3	105.0	25.6	101.4	24.3	98.1	23.2	91.5	22.1
	21.0	15.0	118.2	27.3	111.6	25.9	105.0	24.5	101.4	23.2	98.1	22.1	91.5	20.9
60	-14.7	-15.0	87.9	43.5	87.9	44.3	87.9	45.0	87.0	43.5	84.3	42.1	78.3	38.8
	-12.6	-13.0	93.6	44.3	93.6	45.0	90.0	42.1	87.0	40.6	84.3	39.2	78.3	36.2
	-10.5	-11.0	99.6	45.0	95.4	42.5	90.0	39.6	87.0	38.1	84.3	36.7	78.3	34.0
	-9.5	-10.0	101.4	43.9	95.4	41.0	90.0	38.5	87.0	37.0	84.3	35.6	78.3	33.0
	-8.5	-9.1	101.4	42.8	95.4	39.9	90.0	37.4	87.0	36.0	84.3	34.7	78.3	32.1
	-7.0	-7.6	101.4	40.6	95.4	38.1	90.0	35.7	87.0	34.4	84.3	33.2	78.3	30.8
	-5.0	-5.6	101.4	38.5	95.4	36.1	90.0	33.8	87.0	32.6	84.3	31.4	78.3	29.2
	-3.0	-3.7	101.4	36.7	95.4	34.3	90.0	32.1	87.0	31.0	84.3	29.9	78.3	27.8
	0.0	-0.7	101.4	34.0	95.4	31.9	90.0	29.9	87.0	28.9	84.3	27.9	78.3	25.9
	3.0	2.2	101.4	31.8	95.4	29.9	90.0	28.0	87.0	27.1	84.3	26.2	78.3	24.4
	5.0	4.1	101.4	30.5	95.4	28.7	90.0	26.9	87.0	26.1	84.3	25.2	78.3	23.5
	7.0	6.0	101.4	29.3	95.4	27.6	90.0	25.9	87.0	25.1	84.3	24.3	78.3	22.6
	9.0	7.9	101.4	28.3	95.4	26.6	90.0	25.0	87.0	24.2	84.3	23.4	78.3	21.9
	11.0	9.8	101.4	27.3	95.4	25.7	90.0	24.2	87.0	23.4	84.3	22.6	78.3	21.2
	13.0	11.8	101.4	26.3	95.4	24.8	90.0	23.3	87.0	22.6	84.3	21.9	78.3	20.5
	15.0	13.7	101.4	25.5	95.4	24.0	90.0	22.6	87.0	21.9	84.3	21.2	78.3	19.9
	19.0	14.2	101.4	24.8	95.4	22.9	90.0	21.9	87.0	21.2	84.3	20.4	78.3	19.0
	21.0	15.0	101.4	23.7	95.4	22.2	90.0	21.0	87.0	20.5	84.3	19.8	78.3	18.3
50	-14.7	-15.0	84.6	42.1	79.5	39.6	75.0	37.0	72.6	35.6	70.2	34.3	65.1	31.8
	-12.6	-13.0	84.6	39.6	79.5	37.0	75.0	34.5	72.6	33.3	70.2	32.1	65.1	29.8
	-10.5	-11.0	84.6	37.0	79.5	34.6	75.0	32.4	72.6	31.3	70.2	30.2	65.1	28.1
	-9.5	-10.0	84.6	35.8	79.5	33.6	75.0	31.4	72.6	30.4	70.2	29.3	65.1	27.3
	-8.5	-9.1	84.6	34.8	79.5	32.7	75.0	30.6	72.6	29.6	70.2	28.6	65.1	26.6
	-7.0	-7.6	84.6	33.4	79.5	31.4	75.0	29.4	72.6	28.4	70.2	27.4	65.1	25.5
	-5.0	-5.6	84.6	31.6	79.5	29.7	75.0	27.9	72.6	27.0	70.2	26.1	65.1	24.3
	-3.0	-3.7	84.6	30.1	79.5	28.3	75.0	26.6	72.6	25.7	70.2	24.9	65.1	23.2
	0.0	-0.7	84.6	28.1	79.5	26.4	75.0	24.8	72.6	24.1	70.2	23.3	65.1	21.7
	3.0	2.2	84.6	26.3	79.5	24.8	75.0	23.4	72.6	22.6	70.2	21.9	65.1	20.5
	5.0	4.1	84.6	25.3	79.5	23.9	75.0	22.5	72.6	21.8	70.2	238.9	65.1	19.8
	7.0	6.0	84.6	24.4	79.5	23.0	75.0	21.7	72.6	21.0	70.2	20.4	65.1	19.1
	9.0	7.9	84.6	23.6	79.5	22.2	75.0	21.0	72.6	20.4	70.2	19.7	65.1	18.5
	11.0	9.8	84.6	22.8	79.5	21.5	75.0	20.3	72.6	19.7	70.2	19.1	65.1	17.9
	13.0	11.8	84.6	22.0	79.5	20.8	75.0	19.7	72.6	19.1	70.2	18.5	65.1	17.4
	15.0	13.7	84.6	21.3	79.5	20.2	75.0	19.1	72.6	18.5	70.2	18.0	65.1	16.9
	19.0	14.2	84.6	20.7	79.5	19.4	75.0	18.4	72.6	17.7	70.2	17.4	65.1	16.2
	21.0	15.0	84.6	19.3	79.5	18.9	75.0	17.9	72.6	17.0	70.2	16.7	65.1	15.5

5. Indoor performance with different temperature

Cooling:

1) Low static pressure duct type

Model	outdoor temp. (℃DB)	indoor temp.													
		21.5℃DB 15℃WB		23℃DB 16℃WB		25℃DB 18℃WB		27℃DB 19℃WB		28℃DB 20℃WB		30℃DB 32℃WB		32℃DB 24℃WB	
		CA	SHC	CA	SHC	CA	SHC	CA	SHC	CA	SHC	CA	SHC	CA	SHC
22	20.0	2.2	1.8	2.2	1.9	2.3	1.9	2.3	1.9	2.4	2.0	2.5	1.9	2.6	1.9
	22.5	2.1	1.8	2.2	1.9	2.3	1.8	2.3	1.9	2.4	1.9	2.4	1.9	2.5	1.9
	25.0	2.1	1.8	2.2	1.9	2.2	1.8	2.3	1.9	2.3	1.9	2.4	1.9	2.5	1.9
	27.5	2.1	1.8	2.1	1.9	2.2	1.8	2.3	1.9	2.3	1.9	2.4	1.9	2.5	1.8
	30.0	2.1	1.8	2.1	1.9	2.2	1.8	2.2	1.9	2.3	1.9	2.4	1.9	2.5	1.8
	32.5	2.0	1.8	2.1	1.8	2.2	1.8	2.2	1.8	2.3	1.9	2.4	1.9	2.4	1.8
	35.0	2.0	1.8	2.1	1.8	2.2	1.8	2.2	1.8	2.2	1.9	2.3	1.9	2.4	1.8
	37.5	2.0	1.8	2.0	1.8	2.1	1.8	2.2	1.8	2.2	1.9	2.3	1.9	2.4	1.8
	40.0	2.0	1.8	2.0	1.8	2.1	1.8	2.2	1.8	2.2	1.9	2.3	1.8	2.4	1.8
	43.0	2.0	1.7	2.0	1.8	2.1	1.8	2.1	1.8	2.2	1.9	2.3	1.8	2.3	1.8
28	20.0	2.7	2.2	2.8	2.2	2.9	2.2	3.0	2.2	3.0	2.3	3.1	2.2	3.2	2.2
	22.5	2.7	2.2	2.8	2.2	2.9	2.2	2.9	2.2	3.0	2.3	3.1	2.2	3.2	2.2
	25.0	2.7	2.1	2.7	2.2	2.9	2.2	2.9	2.2	3.0	2.3	3.1	2.2	3.2	2.1
	27.5	2.7	2.1	2.7	2.2	2.8	2.2	2.9	2.2	2.9	2.2	3.1	2.2	3.2	2.1
	30.0	2.6	2.1	2.7	2.2	2.8	2.1	2.9	2.2	2.9	2.2	3.0	2.2	3.1	2.1
	32.5	2.6	2.1	2.7	2.2	2.8	2.1	2.8	2.1	2.9	2.2	3.0	2.2	3.1	2.1
	35.0	2.6	2.1	2.6	2.1	2.7	2.1	2.8	2.1	2.9	2.2	3.0	2.2	3.1	2.1
	37.5	2.5	2.1	2.6	2.1	2.7	2.1	2.8	2.1	2.8	2.2	2.9	2.2	3.1	2.1
	40.0	2.5	2.1	2.6	2.1	2.7	2.1	2.7	2.1	2.8	2.2	2.9	2.1	3.0	2.1
	43.0	2.5	2.0	2.5	2.1	2.7	2.1	2.7	2.1	2.8	2.2	2.9	2.1	3.0	2.1
36	20.0	3.5	2.7	3.6	2.8	3.7	2.7	3.8	2.7	3.9	2.8	4.0	2.7	4.2	2.7
	22.5	3.5	2.7	3.6	2.7	3.7	2.7	3.8	2.7	3.9	2.8	4.0	2.7	4.1	2.7
	25.0	3.5	2.7	3.5	2.7	3.7	2.7	3.7	2.7	3.8	2.8	4.0	2.7	4.1	2.6
	27.5	3.4	2.6	3.5	2.7	3.6	2.7	3.7	2.7	3.8	2.8	3.9	2.7	4.1	2.6
	30.0	3.4	2.6	3.5	2.7	3.6	2.6	3.7	2.7	3.7	2.8	3.9	2.7	4.0	2.6
	32.5	3.3	2.6	3.4	2.7	3.6	2.6	3.6	2.7	3.7	2.7	3.9	2.7	4.0	2.6
	35.0	3.3	2.6	3.4	2.7	3.5	2.6	3.6	2.6	3.7	2.7	3.8	2.7	4.0	2.6
	37.5	3.3	2.6	3.3	2.6	3.5	2.6	3.6	2.6	3.6	2.7	3.8	2.7	3.9	2.6
	40.0	3.2	2.6	3.3	2.6	3.5	2.6	3.5	2.6	3.6	2.7	3.7	2.6	3.9	2.6
	43.0	3.2	2.5	3.3	2.6	3.4	2.6	3.5	2.6	3.6	2.7	3.7	2.6	3.8	2.6
40	20.0	3.9	2.9	4.0	2.9	4.2	2.9	4.3	2.9	4.3	3.0	4.5	2.9	4.7	2.8
	22.5	3.9	2.9	4.0	2.9	4.1	2.9	4.2	2.9	4.3	3.0	4.5	2.9	4.6	2.8
	25.0	3.9	2.8	3.9	2.9	4.1	2.8	4.2	2.9	4.3	2.9	4.4	2.9	4.6	2.8
	27.5	3.8	2.8	3.9	2.9	4.1	2.8	4.1	2.8	4.2	2.9	4.4	2.9	4.5	2.8
	30.0	3.8	2.8	3.9	2.9	4.0	2.8	4.1	2.8	4.2	2.9	4.3	2.8	4.5	2.8
	32.5	3.7	2.8	3.8	2.8	4.0	2.8	4.1	2.8	4.1	2.9	4.3	2.8	4.5	2.7
	35.0	3.7	2.8	3.8	2.8	3.9	2.8	4.0	2.8	4.1	2.9	4.3	2.8	4.4	2.7
	37.5	3.7	2.7	3.7	2.8	3.9	2.8	4.0	2.8	4.1	2.9	4.2	2.8	4.4	2.7
	40.0	3.6	2.7	3.7	2.8	3.9	2.7	3.9	2.8	4.0	2.8	4.2	2.8	4.3	2.7
	43.0	3.6	2.7	3.7	2.8	3.8	2.7	3.9	2.7	4.0	2.8	4.1	2.8	4.3	2.7
45	20.0	4.4	3.3	4.5	3.4	4.7	3.3	4.8	3.4	4.9	3.5	5.0	3.4	5.2	3.3
	22.5	4.4	3.3	4.5	3.4	4.6	3.3	4.7	3.3	4.8	3.4	5.0	3.4	5.2	3.3
	25.0	4.3	3.3	4.4	3.4	4.6	3.3	4.7	3.3	4.8	3.4	5.0	3.3	5.1	3.2
	27.5	4.3	3.3	4.4	3.3	4.5	3.3	4.6	3.3	4.7	3.4	4.9	3.3	5.1	3.2
	30.0	4.2	3.2	4.3	3.3	4.5	3.2	4.6	3.3	4.7	3.4	4.9	3.3	5.0	3.2
	32.5	4.2	3.2	4.3	3.3	4.5	3.2	4.5	3.3	4.6	3.4	4.8	3.3	5.0	3.2
	35.0	4.1	3.2	4.1	3.3	4.4	3.2	4.5	3.2	4.6	3.3	4.8	3.3	5.0	3.2
	37.5	4.1	3.2	4.2	3.2	4.4	3.2	4.5	3.2	4.5	3.3	4.7	3.3	4.9	3.2
	40.0	4.1	3.1	4.1	3.2	4.3	3.2	4.4	3.2	4.5	3.3	4.7	3.2	4.9	3.2
	43.0	4.0	3.1	4.1	3.2	4.3	3.1	4.4	3.2	4.4	3.3	4.6	3.2	4.8	3.1

Model	outdoor temp. (℃DB)	indoor temp.													
		21.5℃DB 15℃WB		23℃DB 16℃WB		25℃DB 18℃WB		27℃DB 19℃WB		28℃DB 20℃WB		30℃DB 32℃WB		32℃DB 24℃WB	
		CA	SHC	CA	SHC	CA	SHC	CA	SHC	CA	SHC	CA	SHC	CA	SHC
56	20.0	5.5	3.9	5.6	4.0	5.8	3.9	5.9	3.9	6.0	4.0	6.3	3.9	6.5	3.8
	22.5	5.4	3.9	5.5	3.9	5.8	3.9	5.9	3.9	6.0	4.0	6.2	3.9	6.4	3.8
	25.0	5.4	3.8	5.5	3.9	5.7	3.8	5.8	3.8	5.9	4.0	6.2	3.8	6.4	3.7
	27.5	5.3	3.8	5.4	3.9	5.7	3.8	5.8	3.8	5.9	3.9	6.1	3.8	6.3	3.7
	30.0	5.3	3.8	5.4	3.9	5.6	3.8	5.7	3.8	5.8	3.9	6.0	3.8	6.3	3.7
	32.5	5.2	3.8	5.3	3.8	5.5	3.7	5.7	3.8	5.8	3.9	6.0	3.8	6.2	3.7
	35.0	5.2	3.7	5.3	3.8	5.5	3.7	5.6	3.7	5.7	3.9	5.9	3.8	6.2	3.7
	37.5	5.1	3.7	5.2	3.8	5.4	3.7	5.5	3.7	5.7	3.8	5.9	3.7	6.1	3.6
	40.0	5.0	3.7	5.2	3.8	5.4	3.7	5.5	3.7	5.6	3.8	5.8	3.7	6.0	3.6
	43.0	5.0	3.6	5.1	3.7	5.3	3.6	5.4	3.7	5.5	3.8	5.8	3.7	6.0	3.6
71	20.0	7.0	5.1	7.1	5.2	7.4	5.1	7.5	5.1	7.7	5.3	8.0	5.2	8.2	5.0
	22.5	6.9	5.1	7.0	5.2	7.3	5.1	7.5	5.1	7.6	5.3	7.9	5.1	8.2	5.0
	25.0	6.8	5.0	7.0	5.2	7.2	5.0	7.4	5.1	7.5	5.2	7.8	5.1	8.1	5.0
	27.5	6.7	5.0	6.9	5.1	7.2	5.0	7.3	5.1	7.5	5.2	7.7	5.1	8.0	4.9
	30.0	6.7	5.0	6.8	5.1	7.1	5.0	7.2	5.0	7.4	5.2	7.7	5.0	8.0	4.9
	32.5	6.6	4.9	6.7	5.1	7.0	4.9	7.2	5.0	7.3	5.2	7.6	5.0	7.9	4.9
	35.0	6.5	4.9	6.7	5.0	7.0	4.9	7.1	5.0	7.2	5.1	7.5	5.0	7.8	4.9
	37.5	6.5	4.9	6.6	5.0	6.9	4.9	7.0	4.9	7.2	5.1	7.5	5.0	7.7	4.8
	40.0	6.4	4.8	6.5	5.0	6.8	4.9	7.0	4.9	7.1	5.1	7.4	4.9	7.7	4.8
	43.0	6.3	4.8	6.4	4.9	6.7	4.8	6.9	4.9	7.0	5.0	7.3	4.9	7.6	4.8
80	20.0	7.8	5.4	8.0	5.5	8.3	5.4	8.5	5.4	8.6	5.6	9.0	5.4	9.3	5.2
	22.5	7.8	5.4	7.9	5.4	8.2	5.3	8.4	5.3	8.6	5.5	8.9	5.3	9.2	5.2
	25.0	7.7	5.3	7.8	5.4	8.2	5.3	8.3	5.3	8.5	5.4	8.8	5.3	9.1	5.2
	27.5	7.6	5.3	7.8	5.4	8.1	5.3	8.2	5.3	8.4	5.4	8.7	5.3	9.0	5.1
	30.0	7.5	5.2	7.7	5.3	8.0	5.2	8.2	5.2	8.3	5.3	8.6	5.2	9.0	5.1
	32.5	7.4	5.2	7.6	5.3	7.9	5.2	8.1	5.2	8.2	5.3	8.6	5.2	8.9	5.0
	35.0	7.4	5.2	7.5	5.3	7.8	5.2	8.0	5.2	8.2	5.3	8.5	5.2	8.8	5.0
	37.5	7.3	5.1	7.4	5.2	7.8	5.1	7.9	5.1	8.1	5.3	8.4	5.2	8.7	5.0
	40.0	7.2	5.0	7.4	5.2	7.7	5.0	7.8	5.1	8.0	5.3	8.3	5.1	8.6	5.0
	43.0	7.1	5.0	7.3	5.1	7.6	5.0	7.7	5.0	7.9	5.2	8.2	5.1	8.5	4.9
90	20.0	8.8	6.3	9.0	6.4	9.4	6.3	9.5	6.3	9.7	6.5	10.1	6.3	10.4	6.1
	22.5	8.7	6.3	8.9	6.4	9.3	6.2	9.5	6.3	9.6	6.5	10.0	6.3	10.4	6.1
	25.0	8.6	6.2	8.8	6.3	9.2	6.2	9.4	6.2	9.5	6.4	9.9	6.3	10.3	6.1
	27.5	8.6	6.2	8.7	6.3	9.1	6.2	9.3	6.2	9.5	6.4	9.8	6.2	10.2	6.0
	30.0	8.5	6.1	8.6	6.3	9.0	6.1	9.2	6.2	9.4	6.4	9.7	6.2	10.1	6.0
	32.5	8.4	6.1	8.6	6.2	8.9	6.1	9.1	6.1	9.3	6.3	9.6	6.2	10.0	6.0
	35.0	8.3	6.0	8.5	6.2	8.8	6.0	9.0	6.1	9.2	6.3	9.6	6.1	9.9	5.9
	37.5	8.2	6.0	8.4	6.1	8.7	6.0	8.9	6.0	9.1	6.2	9.5	6.1	9.8	5.9
	40.0	8.1	5.9	8.3	6.1	8.6	6.0	8.8	6.0	9.0	6.2	9.4	6.0	9.7	5.9
	43.0	8.0	5.9	8.2	6.0	8.5	5.9	8.7	6.0	8.9	6.2	9.3	6.0	9.6	5.8
112	20.0	11.0	7.9	11.2	8.1	11.6	7.9	11.9	8.0	12.1	8.2	12.5	8.0	13.0	7.8
	22.5	10.9	7.9	11.1	8.1	11.5	7.9	11.8	7.9	12.0	8.2	12.4	8.0	12.9	7.7
	25.0	10.8	7.8	11.0	8.0	11.4	7.8	11.5	7.9	11.9	8.1	12.3	7.9	12.8	7.7
	27.5	10.6	7.8	10.9	8.0	11.3	7.8	11.5	7.8	11.8	8.1	12.2	7.9	12.7	7.7
	30.0	10.5	7.7	10.8	7.9	11.2	7.7	11.4	7.8	11.6	8.0	12.1	7.8	12.5	7.6
	32.5	10.4	7.7	10.6	7.8	11.1	7.7	11.3	7.7	11.5	8.0	12.0	7.8	12.4	7.6
	35.0	10.3	7.6	10.5	7.8	11.0	7.6	11.2	7.7	11.4	8.0	11.9	7.8	12.3	7.5
	37.5	10.2	7.6	10.4	7.7	10.9	7.6	11.1	7.7	11.3	7.9	11.8	7.7	12.2	7.5
	40.0	10.1	7.5	10.3	7.7	10.8	7.5	11.0	7.6	11.2	7.9	11.6	7.7	12.1	7.4
	43.0	9.9	7.4	10.2	7.6	10.6	7.5	10.8	7.5	11.1	7.8	11.5	7.6	12.0	7.4
140	20.0	13.7	9.5	14.0	9.7	14.6	9.5	14.8	9.5	15.1	9.8	15.7	9.5	16.2	9.2
	22.5	13.6	9.5	13.9	9.6	14.4	9.5	14.7	9.4	15.0	9.7	15.5	9.4	16.1	9.1
	25.0	13.4	9.4	13.7	9.6	14.3	9.3	14.6	9.4	14.8	9.6	15.4	9.4	16.0	9.1
	27.5	13.3	9.2	13.6	9.5	14.1	9.3	14.4	9.3	14.7	9.5	15.3	9.3	15.8	9.0
	30.0	13.2	9.2	13.4	9.4	14.0	9.2	14.3	9.2	14.6	9.4	15.1	9.2	15.7	9.0
	32.5	13.0	9.2	13.3	9.3	13.9	9.1	14.1	9.2	14.4	9.4	15.0	9.2	15.5	8.9
	35.0	12.9	9.1	13.2	9.3	13.7	9.1	14.0	9.1	14.3	9.4	14.8	9.1	15.4	8.9
	37.5	12.7	9.0	13.0	9.2	13.6	9.0	13.9	9.0	14.1	9.3	14.7	9.1	15.3	8.8
	40.0	12.6	8.9	12.9	9.1	13.4	8.9	13.7	9.0	14.0	9.3	14.6	9.0	15.1	8.8
	43.0	12.4	8.9	12.7	9.0	13.3	8.9	13.6	8.9	13.8	9.2	14.4	9.0	15.0	8.7

2) Med static pressure duct type

Model	outdoor temp.	indoor temp.													
		21.5℃DB 15℃WB		23℃DB 16℃WB		25℃DB 18℃WB		27℃DB 19℃WB		28℃DB 20℃WB		30℃DB 22℃WB		32℃DB 24℃WB	
	℃DB	CA	SHC	CA	SHC	CA	SHC	CA	SHC	CA	SHC	CA	SHC	CA	SHC
90	20.0	8.8	6.2	9.0	6.4	9.4	6.2	9.5	6.2	9.7	6.4	10.1	6.2	10.4	6.0
	22.5	8.7	6.2	8.9	6.3	9.3	6.2	9.5	6.2	9.6	6.4	10.0	6.2	10.4	6.0
	25.0	8.6	6.1	8.8	6.3	9.2	6.1	9.4	6.1	9.5	6.3	9.9	6.1	10.3	6.0
	27.5	8.6	6.1	8.7	6.2	9.1	6.1	9.3	6.1	9.5	6.3	9.8	6.1	10.2	5.9
	30.0	8.5	6.1	8.6	6.2	9.0	6.0	9.2	6.1	9.4	6.2	9.7	6.1	10.1	5.9
	32.5	8.4	6.0	8.6	6.1	8.9	6.0	9.1	6.0	9.3	6.2	9.6	6.0	10.0	5.9
	35.0	8.3	6.0	8.5	6.1	8.8	5.9	9.0	6.0	9.2	6.2	9.5	6.0	9.9	5.8
	37.5	8.2	5.9	8.4	6.0	8.7	5.9	8.9	5.9	8.1	6.1	9.5	6.0	9.8	5.8
	40.0	8.1	5.9	8.3	6.0	8.6	5.9	8.8	5.9	8.0	6.1	9.4	5.9	9.7	5.8
	43.0	8.0	5.8	8.2	5.9	8.5	5.8	8.7	5.9	8.9	6.0	9.3	5.9	9.6	5.7
112	20.0	11.0	8.5	11.2	8.7	11.6	8.5	11.9	8.6	12.1	8.9	12.5	8.6	13.0	8.4
	22.5	10.9	8.4	11.1	8.6	11.5	8.4	11.8	8.5	12.0	8.8	12.4	8.6	12.9	8.4
	25.0	10.8	8.3	11.0	8.6	11.4	8.4	11.6	8.5	11.9	8.8	12.3	8.5	12.8	8.3
	27.5	10.6	8.3	10.9	8.5	11.3	8.3	11.5	8.4	11.8	8.7	12.2	8.5	12.7	8.3
	30.0	10.5	8.2	10.8	8.5	11.2	8.3	11.4	8.4	11.6	8.7	12.1	8.5	12.5	8.2
	32.5	10.4	8.2	10.6	8.4	11.1	8.2	11.3	8.3	11.5	8.6	12.0	8.4	12.4	8.2
	35.0	10.3	8.1	10.5	8.4	11.0	8.2	11.2	8.3	11.4	8.6	11.9	8.4	12.3	8.2
	37.5	10.2	8.1	10.4	8.3	10.9	8.1	11.1	8.2	11.3	8.5	11.8	8.3	12.2	8.1
	40.0	10.1	8.0	10.3	8.2	10.8	8.1	11.0	8.2	11.2	8.5	11.6	8.3	12.1	8.1
	43.0	9.9	8.0	10.2	8.2	10.6	8.0	10.8	8.2	11.1	8.4	11.5	8.3	12.0	8.1
140	20.0	13.7	10.4	14.0	10.6	14.6	10.4	14.8	10.5	15.1	10.8	15.7	10.5	16.2	10.2
	22.5	13.6	10.3	13.9	10.5	14.4	10.3	14.7	10.4	15.0	10.7	15.5	10.5	16.1	10.2
	25.0	13.4	10.2	13.7	10.5	14.3	10.2	14.6	10.3	14.8	10.7	15.4	10.4	16.0	10.1
	27.5	13.3	10.2	13.6	10.4	14.1	10.2	14.4	10.3	14.7	10.6	15.3	10.4	15.8	10.1
	30.0	13.2	10.1	13.4	10.3	14.0	10.1	14.3	10.2	14.6	10.6	15.1	10.3	15.7	10.0
	32.5	13.0	10.0	13.3	10.3	13.9	10.1	14.1	10.2	14.4	10.5	15.0	10.3	15.5	10.0
	35.0	12.9	10.0	13.2	10.2	13.7	10.0	14.0	10.1	14.3	10.5	14.8	10.2	15.4	9.9
	37.5	12.7	9.9	13.0	10.1	13.6	9.9	13.9	10.1	14.1	10.4	14.7	10.2	15.3	9.9
	40.0	12.6	9.8	12.9	10.1	13.4	9.9	13.7	10.0	14.0	10.3	14.6	10.1	15.1	9.9
	43.0	12.4	9.7	12.7	10.0	13.3	9.8	13.6	9.9	13.8	10.3	14.4	10.0	15.0	9.8

3) High static pressure duct type

Model	outdoor temp.	indoor temp.													
		21.5℃DB 15℃WB		23℃DB 16℃WB		25℃DB 18℃WB		27℃DB 19℃WB		28℃DB 20℃WB		30℃DB 22℃WB		32℃DB 24℃WB	
	℃DB	CA	SHC	CA	SHC	CA	SHC	CA	SHC	CA	SHC	CA	SHC	CA	SHC
56	20.0	5.5	3.9	5.6	4.0	5.8	3.9	5.9	3.9	6.0	4.0	6.3	3.9	6.5	3.8
	22.5	5.4	3.9	5.5	3.9	5.8	3.9	5.9	3.9	6.0	4.0	6.2	3.9	6.4	3.8
	25.0	5.4	3.8	5.5	3.9	5.7	3.8	5.8	3.8	5.9	4.0	6.2	3.8	6.4	3.7
	27.5	5.3	3.8	5.4	3.9	5.7	3.8	5.8	3.8	5.9	3.9	6.1	3.8	6.3	3.7
	30.0	5.3	3.8	5.4	3.9	5.6	3.8	5.7	3.8	5.8	3.9	6.0	3.8	6.3	3.7
	32.5	5.2	3.8	5.3	3.9	5.5	3.7	5.7	3.8	5.8	3.9	6.0	3.8	6.2	3.7
	35.0	5.2	3.7	5.3	3.9	5.5	3.7	5.6	3.7	5.7	3.9	5.9	3.8	6.2	3.7
	37.5	5.1	3.7	5.2	3.9	5.4	3.7	5.5	3.7	5.7	3.8	5.9	3.7	6.1	3.6
	40.0	5.0	3.7	5.2	3.8	5.4	3.7	5.5	3.7	5.6	3.8	5.8	3.7	6.0	3.6
	43.0	5.0	3.6	5.1	3.7	5.3	3.6	5.4	3.7	5.5	3.8	5.8	3.7	6.0	3.6
71	20.0	7.0	5.1	7.1	5.2	7.4	5.1	7.5	5.1	7.7	5.3	8.0	5.2	8.2	5.0
	22.5	6.9	5.1	7.0	5.2	7.3	5.1	7.5	5.1	7.6	5.3	7.9	5.1	8.2	5.0
	25.0	6.8	5.0	7.0	5.2	7.2	5.8	7.4	5.1	7.5	2.2	7.8	5.1	8.1	5.0
	27.5	6.7	5.0	6.9	5.1	7.2	5.0	7.3	5.1	7.5	5.2	7.7	5.1	8.0	4.9
	30.0	6.7	5.0	6.8	5.1	7.1	5.0	7.2	5.0	7.4	5.2	7.7	5.0	8.0	4.9
	32.5	6.6	4.9	6.7	5.1	7.0	4.9	7.2	5.0	7.3	5.2	7.6	5.0	7.9	4.9
	35.0	6.5	4.9	6.7	5.0	7.0	4.9	7.1	5.0	7.2	5.1	7.5	5.0	7.8	4.9
	37.5	6.5	4.9	6.6	5.0	6.9	4.9	7.0	4.9	7.2	5.1	7.5	5.0	7.7	4.8
	40.0	6.4	4.8	6.5	5.0	6.8	4.9	7.0	4.9	7.1	5.1	7.4	4.9	7.7	4.8
	43.0	6.3	4.8	6.4	4.9	6.7	4.8	6.9	4.9	7.0	5.0	7.3	4.9	7.6	4.8
80	20.0	7.8	5.7	8.0	5.8	8.3	5.7	8.5	5.7	8.6	5.9	9.0	5.8	9.3	5.6
	22.5	7.8	5.7	7.9	5.8	8.2	5.7	8.4	5.7	8.6	5.9	8.9	5.7	9.2	5.6
	25.0	7.7	5.6	7.8	5.8	8.2	5.6	8.3	5.7	8.5	5.8	8.8	5.7	9.1	5.5
	27.5	7.6	5.6	7.8	5.7	8.1	5.6	8.2	5.6	8.4	5.8	8.7	5.7	9.0	5.5
	30.0	7.5	5.6	7.7	5.7	8.0	5.6	8.2	5.6	8.3	5.8	8.6	5.6	9.0	5.5
	32.5	7.4	5.5	7.6	5.6	7.9	5.5	8.1	5.6	8.2	5.7	8.6	5.6	8.9	5.4
	35.0	7.4	5.5	7.5	5.6	7.8	5.5	8.0	5.5	8.2	5.7	8.5	5.6	8.8	5.4
	37.5	7.3	5.4	7.4	5.6	7.8	5.5	7.9	5.5	8.1	5.7	8.4	5.5	8.7	5.4
	40.0	7.2	5.4	7.4	5.5	7.7	5.4	7.8	5.5	8.0	5.6	8.3	5.5	8.6	5.4
	43.0	7.1	5.4	7.3	5.5	7.6	5.4	7.7	5.4	7.9	5.3	8.2	5.5	8.5	5.3
90	20.0	8.8	6.5	9.0	6.6	9.4	6.5	9.5	6.5	9.7	6.7	10.1	6.5	10.4	6.3
	22.5	8.7	6.4	8.9	6.5	9.3	6.4	9.5	6.5	9.6	6.7	10.0	6.5	10.4	6.3
	25.0	8.6	6.4	8.8	6.5	9.2	6.4	9.4	6.4	9.5	6.3	9.9	6.4	10.3	6.3
	27.5	8.6	6.3	8.7	6.5	9.1	6.3	9.3	6.4	9.5	6.3	9.8	6.4	10.2	6.2
	30.0	8.5	6.3	8.6	6.4	9.0	6.2	9.2	6.3	9.4	6.5	9.7	6.4	10.1	6.2
	32.5	8.4	6.2	8.6	6.4	8.9	6.2	9.1	6.3	9.3	6.5	9.6	6.3	10.0	6.2
	35.0	8.3	6.2	8.5	6.3	8.8	6.2	9.0	6.3	9.2	6.5	9.5	6.2	9.9	6.1
	37.5	8.2	6.2	8.4	6.3	8.7	6.2	8.9	6.2	9.1	6.4	9.5	6.2	9.8	6.1
	40.0	8.1	6.1	8.3	6.3	8.6	6.1	8.8	6.2	9.0	6.4	9.4	6.2	9.7	6.1
	43.0	8.0	6.1	8.2	6.2	8.5	6.1	8.7	6.1	8.9	6.3	9.3	6.2	9.6	6.0
112	20.0	11.0	8.7	11.2	8.9	11.6	8.7	11.9	8.8	12.1	9.1	12.5	8.9	13.0	8.7
	22.5	10.9	8.6	11.1	8.9	11.5	8.7	11.8	8.8	12.0	9.1	12.4	8.9	12.9	8.8
	25.0	10.8	8.6	11.0	8.8	11.4	8.6	11.6	8.7	11.9	9.0	12.3	8.8	12.8	8.8
	27.5	10.6	8.5	10.9	8.8	11.3	8.6	11.5	8.7	11.8	9.0	12.2	8.8	12.7	8.8
	30.0	10.5	8.5	10.8	8.7	11.2	8.5	11.4	8.6	11.6	9.0	12.1	8.7	12.5	8.5
	32.5	10.4	8.4	10.6	8.6	11.1	8.5	11.3	8.6	11.5	8.9	12.0	8.7	12.4	8.5
	35.0	10.3	8.4	10.5	8.6	11.0	8.4	11.2	8.6	11.4	8.9	11.9	8.7	12.3	8.5
	37.5	10.2	8.3	10.4	8.5	10.9	8.4	11.1	8.5	11.3	8.8	11.8	8.8	12.2	8.4
	40.0	10.1	8.3	10.3	8.5	10.8	8.3	11.0	8.5	11.2	8.8	11.6	8.8	12.1	8.4
	43.0	9.9	8.2	10.2	8.4	10.6	8.3	10.8	8.4	11.1	8.7	11.5	8.5	12.0	8.3
140	20.0	13.7	10.0	14.0	10.2	14.6	10.0	14.8	10.1	15.1	10.4	15.7	10.1	16.2	9.8
	22.5	13.6	10.0	13.9	10.2	14.4	9.9	14.7	10.0	15.0	10.3	15.5	10.0	16.1	9.8
	25.0	13.4	9.9	13.7	10.1	14.3	9.9	14.6	10.0	14.8	10.3	15.4	10.0	16.0	9.7
	27.5	13.3	9.8	13.6	10.0	14.1	9.8	14.4	9.9	14.7	10.2	15.3	9.9	15.8	9.7
	30.0	13.2	9.8	13.4	10.0	14.0	9.8	14.3	9.8	14.6	10.1	15.1	9.9	15.7	9.6
	32.5	13.0	9.7	13.3	9.9	13.9	9.7	14.1	9.8	14.4	10.1	15.0	9.8	15.5	9.6
	35.0	12.9	9.6	13.2	9.8	13.7	9.6	14.0	9.7	14.3	10.0	14.8	9.8	15.4	9.5
	37.5	12.7	9.5	13.0	9.8	13.6	9.6	13.9	9.7	14.1	10.0	14.7	9.7	15.3	9.5
	40.0	12.6	9.5	12.9	9.7	13.4	9.5	13.7	9.6	14.0	9.9	14.6	9.7	15.1	9.4
	43.0	12.4	9.4	12.7	9.6	13.3	9.4	13.6	9.5	13.8	9.8	14.4	9.6	15.0	9.4

4) 4-way cassette type

Model	outdoor temp.	indoor temp.													
		21.5℃DB 15℃WB		23℃DB 16℃WB		25℃DB 18℃WB		27℃DB 19℃WB		28℃DB 20℃WB		30℃DB 22℃WB		32℃DB 24℃WB	
	℃DB	CA	SHC	CA	SHC	CA	SHC	CA	SHC	CA	SHC	CA	SHC	CA	SHC
22	20.0	2.2	1.6	2.2	1.6	2.3	1.6	2.3	1.6	2.4	1.6	2.5	1.6	2.6	1.6
	22.5	2.1	1.5	2.2	1.6	2.3	1.5	2.3	1.6	2.4	1.6	2.4	1.6	2.5	1.6
	25.0	2.1	1.5	2.2	1.6	2.2	1.5	2.3	1.5	2.3	1.6	2.4	1.5	2.5	1.5
	27.5	2.1	1.5	2.1	1.6	2.2	1.5	2.3	1.5	2.3	1.6	2.4	1.5	2.5	1.5
	30.0	2.1	1.5	2.1	1.5	2.2	1.5	2.2	1.5	2.3	1.6	2.4	1.5	2.5	1.5
	32.5	2.0	1.5	2.1	1.5	2.2	1.5	2.2	1.5	2.3	1.6	2.4	1.5	2.4	1.5
	35.0	2.0	1.5	2.1	1.5	2.2	1.5	2.2	1.5	2.2	1.6	2.3	1.5	2.4	1.5
	37.5	2.0	1.5	2.0	1.5	2.1	1.5	2.2	1.5	2.2	1.5	2.3	1.5	2.4	1.5
	40.0	2.0	1.5	2.0	1.5	2.1	1.5	2.2	1.5	2.2	1.5	2.3	1.5	2.4	1.5
	43.0	2.0	1.5	2.0	1.5	2.1	1.5	2.1	1.5	2.2	1.5	2.3	1.5	2.3	1.5
28	20.0	2.7	2.0	2.8	2.1	2.9	2.0	3.0	2.0	3.0	2.1	3.1	2.0	3.2	2.0
	22.5	2.7	2.0	2.8	2.0	2.9	2.0	2.9	2.0	3.0	2.1	3.1	2.0	3.2	2.0
	25.0	2.7	2.0	2.7	2.0	2.9	2.0	2.9	2.0	3.0	2.1	3.1	2.0	3.2	1.9
	27.5	2.7	2.0	2.7	2.0	2.8	2.0	2.9	2.0	2.9	2.0	3.1	2.0	3.2	1.9
	30.0	2.6	2.0	2.7	2.0	2.8	2.0	2.9	2.0	2.9	2.0	3.0	2.0	3.1	1.9
	32.5	2.6	1.9	2.7	2.0	2.8	1.9	2.8	2.0	2.9	2.0	3.0	2.0	3.1	1.9
	35.0	2.6	1.9	2.6	2.0	2.7	1.9	2.8	1.9	2.9	2.0	3.0	2.0	3.1	1.9
	37.5	2.5	1.9	2.6	2.0	2.7	1.9	2.8	1.9	2.8	2.0	2.9	1.9	3.1	1.9
	40.0	2.5	1.9	2.6	1.9	2.7	1.9	2.7	1.9	2.8	2.0	2.9	1.9	3.0	1.9
	43.0	2.5	1.9	2.5	1.9	2.7	1.9	2.7	1.9	2.8	2.0	2.9	1.9	3.0	1.9
36	20.0	3.5	2.7	3.6	2.7	3.7	2.7	3.8	2.7	3.9	2.8	4.0	2.7	4.2	2.6
	22.5	3.5	2.7	3.6	2.7	3.7	2.7	3.8	2.7	3.9	2.8	4.0	2.7	4.1	2.6
	25.0	3.5	2.6	3.5	2.7	3.7	2.6	3.7	2.7	3.8	2.8	4.0	2.7	4.1	2.6
	27.5	3.4	2.6	3.5	2.7	3.6	2.6	3.7	2.7	3.8	2.7	3.9	2.7	4.1	2.6
	30.0	3.4	2.6	3.5	2.7	3.6	2.6	3.7	2.6	3.7	2.7	3.9	2.7	4.0	2.6
	32.5	3.3	2.6	3.4	2.7	3.6	2.6	3.6	2.6	3.7	2.7	3.9	2.7	4.0	2.6
	35.0	3.3	2.6	3.4	2.7	3.5	2.6	3.6	2.6	3.7	2.7	3.8	2.6	4.0	2.6
	37.5	3.3	2.6	3.3	2.6	3.5	2.6	3.6	2.6	3.6	2.7	3.8	2.6	3.9	2.6
	40.0	3.2	2.5	3.3	2.6	3.5	2.5	3.5	2.5	3.6	2.7	3.7	2.6	3.9	2.5
	43.0	3.2	2.5	3.3	2.6	3.4	2.5	3.5	2.5	3.6	2.7	3.7	2.6	3.8	2.5
40	20.0	3.9	2.9	4.0	2.9	4.2	2.9	4.3	2.9	4.3	3.0	4.5	2.9	4.7	2.8
	22.5	3.9	2.9	4.0	2.9	4.1	2.9	4.2	2.9	4.3	3.0	4.5	2.9	4.5	2.8
	25.0	3.9	2.8	3.9	2.9	4.1	2.8	4.2	2.9	4.3	2.9	4.4	2.9	4.6	2.8
	27.5	3.8	2.8	3.9	2.9	4.1	2.8	4.1	2.8	4.2	2.9	4.4	2.9	4.5	2.8
	30.0	3.8	2.8	3.9	2.9	4.0	2.8	4.1	2.8	4.2	2.9	4.3	2.8	4.5	2.8
	32.5	3.7	2.8	3.8	2.8	4.0	2.8	4.1	2.8	4.1	2.9	4.3	2.9	4.5	2.7
	35.0	3.7	2.8	3.8	2.8	3.9	2.8	4.0	2.8	4.1	2.9	4.3	2.8	4.4	2.7
	37.5	3.7	2.7	3.7	2.8	3.9	2.7	4.0	2.8	4.1	2.9	4.2	2.9	4.4	2.7
	40.0	3.6	2.7	3.7	2.8	3.9	2.7	3.9	2.8	4.0	2.8	4.2	2.8	4.3	2.7
	43.0	3.6	2.7	3.7	2.8	3.8	2.7	3.9	2.7	4.0	2.8	4.1	2.8	4.3	2.7
45	20.0	4.4	3.4	4.5	3.5	4.7	3.4	4.8	3.4	4.9	3.5	5.0	3.4	5.2	3.3
	22.5	4.4	3.4	4.5	3.4	4.6	3.4	4.7	3.4	4.8	3.5	5.0	3.4	5.2	3.3
	25.0	4.3	3.3	4.4	3.4	4.6	3.3	4.7	3.4	4.8	3.5	5.0	3.4	5.1	3.3
	27.5	4.3	3.3	4.4	3.4	4.5	3.3	4.6	3.4	4.7	3.5	4.9	3.4	5.1	3.3
	30.0	4.2	3.3	4.3	3.4	4.5	3.3	4.6	3.3	4.7	3.5	4.9	3.4	5.0	3.3
	32.5	4.2	3.3	4.3	3.4	4.5	3.3	4.5	3.3	4.5	3.4	4.8	3.4	5.0	3.3
	35.0	4.1	3.2	4.2	3.3	4.4	3.2	4.5	3.3	4.6	3.4	4.8	3.3	5.0	3.3
	37.5	4.1	3.2	4.2	3.3	4.4	3.2	4.5	3.3	4.5	3.4	4.7	3.3	4.9	3.2
	40.0	4.1	3.2	4.1	3.3	4.3	3.2	4.4	3.3	4.5	3.4	4.7	3.3	4.9	3.2
	43.0	4.0	3.2	4.1	3.3	4.3	3.2	4.4	3.2	4.4	3.4	4.6	3.3	4.8	3.2

Model	outdoor temp.	indoor temp.													
		21.5℃DB 15℃WB		23℃DB 16℃WB		25℃DB 18℃WB		27℃DB 19℃WB		28℃DB 20℃WB		30℃DB 22℃WB		32℃DB 24℃WB	
	℃DB	CA	SHC	CA	SHC	CA	SHC	CA	SHC	CA	SHC	CA	SHC	CA	SHC
56	20.0	5.5	4.0	5.6	4.1	5.8	4.0	5.9	4.0	6.0	4.1	6.3	4.0	6.5	3.9
	22.5	5.4	3.9	5.5	4.0	5.8	3.9	5.9	4.0	6.0	4.1	6.2	4.0	6.4	3.9
	25.0	5.4	3.9	5.5	4.0	5.7	3.9	5.8	3.9	5.9	4.1	6.2	3.9	6.4	3.8
	27.5	5.3	3.9	5.4	4.0	5.7	3.9	5.8	3.9	5.9	4.0	6.1	3.9	6.3	3.8
	30.0	5.3	3.9	5.4	3.9	5.6	3.9	5.7	3.9	5.8	4.0	6.0	3.9	6.3	3.8
	32.5	5.2	3.8	5.3	3.9	5.5	3.8	5.7	3.8	5.8	4.0	6.0	3.9	6.2	3.8
	35.0	5.2	3.8	5.3	3.9	5.5	3.8	5.6	3.8	5.7	4.0	5.9	3.9	6.2	3.8
	37.5	5.1	3.8	5.2	3.9	5.4	3.8	5.5	3.8	5.7	3.9	5.9	3.8	6.1	3.7
	40.0	5.0	3.7	5.2	3.8	5.4	3.8	5.5	3.8	5.6	3.9	5.8	3.8	6.0	3.7
	43.0	5.0	3.7	5.1	3.8	5.3	3.7	5.4	3.8	5.5	3.9	5.8	3.8	6.0	3.7
71	20.0	7.0	4.9	7.1	5.0	7.4	4.9	7.5	4.9	7.7	5.0	8.0	4.9	8.2	4.7
	22.5	6.9	4.9	7.0	4.9	7.3	4.8	7.5	4.8	7.6	5.0	7.9	4.8	8.2	4.7
	25.0	6.8	4.8	7.0	4.9	7.2	4.8	7.4	4.8	7.5	4.9	7.8	4.8	8.1	4.7
	27.5	6.7	4.8	6.9	4.9	7.2	4.8	7.3	4.8	7.5	4.9	7.7	4.8	8.0	4.6
	30.0	6.7	4.7	6.8	4.8	7.1	4.7	7.2	4.7	7.4	4.9	7.7	4.7	8.0	4.6
	32.5	6.6	4.7	6.7	4.8	7.0	4.7	7.2	4.7	7.3	4.8	7.6	4.7	7.9	4.6
	35.0	6.5	4.7	6.7	4.8	7.0	4.7	7.1	4.7	7.2	4.8	7.5	4.7	7.8	4.6
	37.5	6.5	4.6	6.6	4.7	6.9	4.6	7.0	4.6	7.2	4.8	7.5	4.7	7.7	4.5
	40.0	6.4	4.6	6.5	4.7	6.8	4.6	7.0	4.6	7.1	4.8	7.4	4.6	7.7	4.5
	43.0	6.3	4.6	6.4	4.6	6.7	4.6	6.9	4.6	7.0	4.7	7.3	4.6	7.6	4.5
80	20.0	7.8	5.5	8.0	5.6	8.3	5.5	8.5	5.5	8.6	5.7	9.0	5.5	9.3	5.3
	22.5	7.8	5.5	7.9	5.5	8.2	5.4	8.4	5.4	8.6	5.6	8.9	5.4	9.2	5.3
	25.0	7.7	5.4	7.8	5.5	8.2	5.4	8.3	5.4	8.5	5.5	8.8	5.4	9.1	5.3
	27.5	7.6	5.4	7.8	5.5	8.1	5.4	8.2	5.4	8.4	5.5	8.7	5.4	9.0	5.2
	30.0	7.5	5.3	7.7	5.4	8.0	5.3	8.2	5.3	8.3	5.4	8.6	5.3	9.0	5.2
	32.5	7.4	5.3	7.6	5.4	7.9	5.3	8.1	5.3	8.2	5.4	8.6	5.3	8.9	5.1
	35.0	7.4	5.3	7.5	5.4	7.8	5.3	8.0	5.3	8.2	5.4	8.5	5.3	8.8	5.1
	37.5	7.3	5.2	7.4	5.3	7.8	5.2	7.9	5.2	8.1	5.4	8.4	5.3	8.7	5.1
	40.0	7.2	5.1	7.4	5.3	7.7	5.1	7.8	5.2	8.0	5.4	8.3	5.2	8.6	5.1
	43.0	7.1	5.1	7.3	5.2	7.6	5.1	7.7	5.1	7.9	5.3	8.2	5.2	8.5	5.0
90	20.0	8.8	6.4	9.0	6.5	9.4	6.4	9.5	6.4	9.7	6.6	10.1	6.4	10.4	6.2
	22.5	8.7	6.4	8.9	6.5	9.3	6.3	9.5	6.4	9.6	6.6	10.0	6.4	10.4	6.2
	25.0	8.6	6.3	8.8	6.4	9.2	6.3	9.4	6.3	9.5	6.5	9.9	6.4	10.3	6.2
	27.5	8.6	6.3	8.7	6.4	9.1	6.3	9.3	6.3	9.5	6.5	9.8	6.3	10.2	6.1
	30.0	8.5	6.2	8.6	6.4	9.0	6.2	9.2	6.3	9.4	6.5	9.7	6.3	10.1	6.1
	32.5	8.4	6.2	8.6	6.3	8.9	6.2	9.1	6.2	9.3	6.4	9.6	6.3	10.0	6.1
	35.0	8.3	6.1	8.5	6.3	8.8	6.1	9.0	6.2	9.2	6.4	9.5	6.2	9.9	6.0
	37.5	8.2	6.1	8.4	6.2	8.7	6.1	8.9	6.1	9.1	6.3	9.5	6.2	9.8	6.0
	40.0	8.1	6.0	8.3	6.2	8.6	6.1	8.8	6.1	9.0	6.3	9.4	6.1	9.7	6.0
	43.0	8.0	6.0	8.2	6.1	8.5	6.0	8.5	6.1	8.9	6.3	9.3	6.1	9.6	5.9
112	20.0	11.0	8.0	11.2	8.2	11.6	8.0	11.9	8.1	12.1	8.3	12.5	8.1	13.0	7.9
	22.5	10.9	8.0	11.1	8.2	11.5	8.0	11.8	8.0	12.0	8.3	12.4	8.1	12.9	7.8
	25.0	10.8	7.9	11.0	8.1	11.4	7.9	11.6	8.0	11.9	8.2	12.3	8.0	12.8	7.8
	27.5	10.6	7.9	10.9	8.1	11.3	7.9	11.5	7.9	11.8	8.2	12.2	8.0	12.7	7.8
	30.0	10.5	7.8	10.8	8.0	11.2	7.8	11.4	7.8	11.6	8.1	12.1	7.9	12.5	7.7
	32.5	10.4	7.8	10.6	7.9	11.1	7.8	11.3	7.8	11.5	8.1	12.0	7.9	12.4	7.7
	35.0	10.3	7.7	10.5	7.9	11.0	7.7	11.2	7.8	11.4	8.1	11.9	7.9	12.3	7.6
	37.5	10.2	7.7	10.4	7.8	10.9	7.7	11.1	7.8	11.3	8.0	11.8	7.8	12.2	7.6
	40.0	10.1	7.6	10.3	7.8	10.8	7.6	11.0	7.7	11.2	8.0	11.6	7.8	12.1	7.6
	43.0	9.9	7.5	10.2	7.7	10.6	7.6	10.8	7.6	11.1	7.9	11.5	7.7	12.0	7.5
140	20.0	13.7	9.6	14.0	9.8	14.6	9.6	14.8	9.6	15.1	9.9	15.7	9.6	16.2	9.3
	22.5	13.6	9.6	13.9	9.7	14.4	9.5	14.7	9.5	15.0	9.8	15.5	9.5	16.1	9.2
	25.0	13.4	9.5	13.7	9.7	14.3	9.4	14.6	9.5	14.8	9.7	15.4	9.5	16.0	9.2
	27.5	13.3	9.4	13.6	9.6	14.1	9.4	14.4	9.4	14.7	9.6	15.3	9.4	15.8	9.1
	30.0	13.2	9.3	13.4	9.5	14.0	9.3	14.3	9.3	14.6	9.5	15.1	9.3	15.7	9.1
	32.5	13.0	9.3	13.3	9.4	13.9	9.2	14.1	9.3	14.4	9.5	15.0	9.3	15.5	9.0
	35.0	12.9	9.2	13.2	9.4	13.7	9.2	14.0	9.2	14.3	9.5	14.8	9.2	15.4	9.0
	37.5	12.7	9.1	13.0	9.3	13.6	9.1	13.9	9.1	14.1	9.4	14.7	9.2	15.3	8.9
	40.0	12.6	9.0	12.9	9.2	13.4	9.0	13.7	9.1	14.0	9.4	14.6	9.1	15.1	8.9
	43.0	12.4	9.0	12.7	9.1	13.3	9.0	13.6	9.0	13.8	9.3	14.4	9.1	15.0	8.8

5) Wall mounted type

A. Cooling

Model	outdoor temp.	indoor temp.													
		21.5℃DB 15℃WB		23℃DB 16℃WB		25℃DB 18℃WB		27℃DB 19℃WB		28℃DB 20℃WB		30℃DB 22℃WB		32℃DB 24℃WB	
	℃DB	CA	SHC	CA	SHC	CA	SHC	CA	SHC	CA	SHC	CA	SHC	CA	SHC
22	20.0	2.2	1.5	2.2	1.5	2.3	1.5	2.3	1.5	2.4	1.6	2.5	1.5	2.6	1.5
	22.5	2.1	1.5	2.2	1.5	2.3	1.5	2.3	1.5	2.4	1.5	2.4	1.5	2.5	1.5
	25.0	2.1	1.5	2.2	1.5	2.2	1.5	2.3	1.5	2.3	1.5	2.4	1.5	2.5	1.5
	27.5	2.1	1.5	2.1	1.5	2.2	1.5	2.3	1.5	2.3	1.5	2.4	1.5	2.5	1.4
	30.0	2.1	1.5	2.1	1.5	2.2	1.5	2.2	1.5	2.3	1.5	2.4	1.5	2.5	1.4
	32.5	2.0	1.5	2.1	1.5	2.2	1.5	2.2	1.5	2.3	1.5	2.4	1.5	2.4	1.4
	35.0	2.0	1.5	2.1	1.5	2.2	1.5	2.2	1.5	2.2	1.5	2.3	1.5	2.4	1.4
	37.5	2.0	1.4	2.0	1.5	2.1	1.5	2.2	1.4	2.2	1.5	2.3	1.5	2.4	1.4
	40.0	2.0	1.4	2.0	1.5	2.1	1.5	2.2	1.4	2.2	1.5	2.3	1.4	2.4	1.4
	43.0	2.0	1.4	2.0	1.4	2.1	1.4	2.1	1.4	2.2	1.5	2.3	1.4	2.3	1.4
28	20.0	2.7	1.9	2.8	1.9	2.9	1.9	3.0	1.9	3.0	1.9	3.1	1.9	3.2	1.8
	22.5	2.7	1.9	2.8	1.9	2.9	1.9	2.9	1.9	3.0	1.9	3.1	1.9	3.2	1.8
	25.0	2.7	1.9	2.7	1.9	2.9	1.9	2.9	1.9	3.0	1.9	3.1	1.9	3.2	1.8
	27.5	2.7	1.9	2.7	1.9	2.8	1.9	2.9	1.9	2.9	1.9	3.1	1.9	3.2	1.8
	30.0	2.6	1.8	2.7	1.9	2.8	1.9	2.9	1.8	2.9	1.9	3.0	1.8	3.1	1.8
	32.5	2.6	1.8	2.7	1.9	2.8	1.8	2.8	1.8	2.9	1.9	3.0	1.8	3.1	1.8
	35.0	2.6	1.8	2.6	1.9	2.7	1.8	2.8	1.8	2.9	1.9	3.0	1.8	3.1	1.8
	37.5	2.5	1.8	2.6	1.8	2.7	1.8	2.8	1.8	2.8	1.9	2.9	1.8	3.1	1.8
	40.0	2.5	1.8	2.6	1.8	2.7	1.8	2.7	1.8	2.8	1.8	2.9	1.8	3.0	1.7
	43.0	2.5	1.8	2.5	1.8	2.7	1.8	2.7	1.8	2.8	1.8	2.9	1.8	3.0	1.7
36	20.0	3.5	2.8	3.6	2.9	3.7	2.8	3.8	2.9	3.9	3.0	4.0	2.9	4.2	2.8
	22.5	3.5	2.8	3.6	2.9	3.7	2.8	3.8	2.9	3.9	3.0	4.0	2.9	4.1	2.8
	25.0	3.5	2.8	3.5	2.9	3.7	2.8	3.7	2.9	3.8	3.0	4.0	2.9	4.1	2.8
	27.5	3.4	2.8	3.5	2.9	3.6	2.8	3.7	2.8	3.8	2.9	3.9	2.9	4.1	2.8
	30.0	3.4	2.8	3.5	2.8	3.6	2.8	3.7	2.8	3.7	2.9	3.9	2.9	4.0	2.8
	32.5	3.3	2.7	3.4	2.8	3.6	2.8	3.6	2.8	3.7	2.9	3.9	2.9	4.0	2.8
	35.0	3.3	2.7	3.4	2.8	3.5	2.8	3.5	2.8	3.7	2.9	3.8	2.8	4.0	2.8
	37.5	3.3	2.7	3.3	2.8	3.5	2.7	3.5	2.8	3.6	2.9	3.8	2.8	3.8	2.8
	40.0	3.2	2.7	3.3	2.8	3.5	2.7	3.5	2.8	3.6	2.9	3.7	2.8	3.9	2.7
	43.0	3.2	2.7	3.3	2.8	3.4	2.7	3.5	2.8	3.6	2.9	3.7	2.8	3.8	2.7
40	20.0	3.9	2.9	4.0	3.0	4.2	2.9	4.3	3.0	4.3	3.2	4.5	3.0	4.7	2.9
	22.5	3.9	2.9	4.0	3.0	4.1	2.9	4.2	3.0	4.3	3.2	4.5	3.0	4.6	2.9
	25.0	3.9	2.9	3.9	3.0	4.1	2.9	4.2	3.0	4.3	3.2	4.4	3.0	4.6	2.9
	27.5	3.8	2.9	3.9	3.0	4.1	2.9	4.1	2.9	4.2	3.0	4.4	3.0	4.5	2.9
	30.0	3.8	2.9	3.9	2.9	4.0	2.9	4.1	2.9	4.2	3.0	4.3	3.0	4.5	2.9
	32.5	3.7	2.8	3.8	2.9	4.0	2.9	4.1	2.9	4.1	3.0	4.3	3.0	4.5	2.9
	35.0	3.7	2.8	3.8	2.9	3.9	2.9	4.0	2.9	4.1	3.0	4.3	2.9	4.4	2.9
	37.5	3.7	2.8	3.7	2.9	3.9	2.8	4.0	2.9	4.1	3.0	4.2	2.9	4.4	2.9
	40.0	3.6	2.8	3.7	2.9	3.9	2.8	3.9	2.9	4.0	3.0	4.2	2.9	4.3	2.8
	43.0	3.6	2.8	3.7	2.9	3.8	2.8	3.9	2.9	4.0	3.0	4.1	2.9	4.3	2.8
45	20.0	4.4	3.2	4.5	3.3	4.7	3.2	4.8	3.2	4.9	3.3	5.0	3.3	5.2	3.2
	22.5	4.4	3.2	4.5	3.3	4.6	3.2	4.7	3.2	4.8	3.3	5.0	3.2	5.2	3.2
	25.0	4.3	3.2	4.4	3.3	4.6	3.2	4.7	3.2	4.8	3.3	5.0	3.2	5.1	3.1
	27.5	4.3	3.2	4.4	3.2	4.5	3.2	4.6	3.2	4.7	3.3	4.9	3.2	5.1	3.1
	30.0	4.2	3.1	4.3	3.2	4.5	3.1	4.6	3.2	4.7	3.3	4.9	3.2	5.0	3.1
	32.5	4.2	3.1	4.3	3.2	4.5	3.1	4.5	3.2	4.6	3.3	4.8	3.2	5.0	3.1
	35.0	4.1	3.1	4.2	3.2	4.4	3.1	4.4	3.1	4.6	3.2	4.8	3.2	5.0	3.1
	37.5	4.1	3.1	4.2	3.2	4.4	3.1	4.5	3.1	4.5	3.2	4.7	3.1	4.9	3.1
	40.0	4.1	3.1	4.1	3.1	4.3	3.1	4.4	3.1	4.5	3.2	4.7	3.1	4.9	3.0
	43.0	4.0	3.0	4.1	3.1	4.3	3.0	4.4	3.1	4.4	3.2	4.6	3.1	4.8	3.0
56	20.0	5.5	3.8	5.6	3.9	5.8	3.8	5.9	3.8	6.0	3.9	6.3	3.7	6.5	3.6
	22.5	5.4	3.8	5.5	3.8	5.8	3.7	5.9	3.7	6.0	3.8	6.2	3.7	6.4	3.6
	25.0	5.4	3.7	5.5	3.8	5.7	3.7	5.8	3.7	5.9	3.8	6.2	3.7	6.4	3.6
	27.5	5.3	3.7	5.4	3.8	5.7	3.7	5.8	3.7	5.9	3.8	6.1	3.7	6.3	3.6
	30.0	5.3	3.7	5.4	3.7	5.6	3.7	5.7	3.7	5.8	3.8	6.0	3.7	6.3	3.5
	32.5	5.2	3.6	5.3	3.7	5.5	3.6	5.7	3.6	5.8	3.7	6.0	3.6	6.2	3.5
	35.0	5.2	3.6	5.3	3.7	5.5	3.6	5.6	3.6	5.7	3.7	5.9	3.6	6.2	3.5
	37.5	5.1	3.6	5.2	3.7	5.4	3.6	5.5	3.6	5.7	3.7	5.9	3.6	6.1	3.5
	40.0	5.0	3.6	5.2	3.6	5.4	3.5	5.5	3.6	5.6	3.7	5.8	3.6	6.0	3.5
	43.0	5.0	3.5	5.1	3.6	5.3	3.5	5.4	3.5	5.5	3.6	5.8	3.5	6.0	3.4

B. Heating

Model	outdoor temp. (℃WB)	indoor temp.			
		15.0	20.0	25.0	27.0
		SHC	SHC	SHC	SHC
22	-15.0	1.7	1.6	1.6	1.6
	-10.0	1.9	1.9	1.9	1.7
	-5.0	2.1	2.1	1.9	1.7
	0.0	2.4	2.4	1.9	1.7
	2.5	2.5	2.5	1.9	1.7
	6.0	2.5	2.5	1.9	1.7
	6.5	2.6	2.5	1.9	1.7
	10.0	2.8	2.5	1.9	1.7
	12.5	3.0	2.5	1.9	1.7
	15.5	3.0	2.5	1.9	1.7
28	-15.0	2.1	2.1	2.1	2.1
	-10.0	2.4	2.4	2.4	2.2
	-5.0	2.7	2.7	2.5	2.2
	0.0	3.1	3.0	2.5	2.2
	2.5	3.2	3.2	2.5	2.2
	6.0	3.2	3.2	2.5	2.2
	6.5	3.4	3.2	2.5	2.2
	10.0	3.6	3.2	2.5	2.2
	12.5	3.8	3.2	2.5	2.2
	15.5	3.9	3.2	2.5	2.2
36	-15.0	2.7	2.6	2.6	2.6
	-10.0	3.1	3.0	3.0	2.8
	-5.0	3.4	3.4	3.1	2.8
	0.0	3.8	3.8	3.1	2.8
	2.5	4.0	4.0	3.1	2.8
	6.0	4.0	4.0	3.1	2.8
	6.5	4.2	4.0	3.1	2.8
	10.0	4.5	4.0	3.1	2.8
	12.5	4.8	4.0	3.1	2.8
	15.5	4.8	4.0	3.1	2.8
40	-15.0	3.0	3.0	3.0	3.0
	-10.0	3.5	3.4	3.4	3.1
	-5.0	3.9	3.8	3.5	3.1
	0.0	4.3	4.3	3.5	3.1
	2.5	4.5	4.5	3.5	3.1
	6.0	4.6	4.5	3.5	3.1
	6.5	4.8	4.5	3.5	3.1
	10.0	5.1	4.5	3.5	3.1
	12.5	5.4	4.5	3.5	3.1
	15.5	5.5	4.5	3.5	3.1
45	-15.0	3.3	3.3	3.3	3.3
	-10.0	3.8	3.8	3.7	3.5
	-5.0	4.3	4.2	3.9	3.5
	0.0	4.8	4.7	3.9	3.5
	2.5	5.0	5.0	3.9	3.5
	6.0	5.1	5.0	3.9	3.5
	6.5	5.3	5.0	3.9	3.5
	10.0	5.6	5.0	3.9	3.5
	12.5	6.0	5.0	3.9	3.5
	15.5	6.1	5.0	3.9	3.5
56	-15.0	4.2	4.2	4.1	4.1
	-10.0	4.8	4.8	4.7	4.3
	-5.0	5.4	5.3	4.9	4.3
	0.0	6.0	5.9	4.9	4.3
	2.5	6.3	6.2	4.9	4.3
	6.0	6.4	6.3	4.9	4.3
	6.5	6.6	6.3	4.9	4.3
	10.0	7.1	6.3	4.9	4.3
	12.5	7.5	6.3	4.9	4.3
	15.5	7.6	6.3	4.9	4.3

Model	outdoor temp. (℃WB)	indoor temp.			
		15.0	20.0	25.0	27.0
		SHC	SHC	SHC	SHC
71	-15.0	5.4	5.3	5.2	5.2
	-10.0	6.1	6.0	6.0	5.5
	-5.0	6.9	6.8	6.2	5.5
	0.0	7.6	7.5	6.2	5.5
	2.5	8.0	7.9	6.2	5.5
	6.0	8.1	8.0	6.2	5.5
	6.5	8.4	8.0	6.2	5.5
	10.0	9.0	8.0	6.2	5.5
	12.5	9.6	8.0	6.2	5.5
	15.5	9.7	8.0	6.2	5.5
80	-15.0	6.0	5.9	5.9	5.9
	-10.0	6.9	6.8	6.7	6.2
	-5.0	7.7	7.6	7.0	6.2
	0.0	8.6	8.5	7.0	6.2
	2.5	9.0	8.9	7.0	6.2
	6.0	9.1	9.0	7.0	6.2
	6.5	9.5	9.0	7.0	6.2
	10.0	10.1	9.0	7.0	6.2
	12.5	10.8	9.0	7.0	6.2
	15.5	10.9	9.0	7.0	6.2
90	-15.0	6.7	6.6	6.5	6.5
	-10.0	7.6	7.5	7.4	6.9
	-5.0	8.6	8.5	7.8	6.9
	0.0	9.5	9.4	7.8	6.9
	2.5	10.0	9.9	7.8	6.9
	6.0	10.1	10.0	7.8	6.9
	6.5	10.5	10.0	7.8	6.9
	10.0	11.2	10.0	7.8	6.9
	12.5	12.0	10.0	7.8	6.9
	15.5	12.1	10.0	7.8	6.9
112	-15.0	8.4	8.2	8.2	8.1
	-10.0	9.6	9.4	9.3	8.6
	-5.0	10.7	10.6	9.8	8.6
	0.0	11.9	11.8	9.8	8.6
	2.5	12.5	12.4	9.8	8.6
	6.0	12.5	12.5	9.8	8.6
	6.5	13.2	12.5	9.8	8.6
	10.0	14.1	12.5	9.8	8.6
	12.5	15.0	12.5	9.8	8.6
	15.5	15.1	12.5	9.8	8.6
140	-15.0	10.7	10.6	10.5	10.4
	-10.0	12.2	12.1	11.9	11.0
	-5.0	13.7	13.6	12.5	11.0
	0.0	15.3	15.1	12.5	11.0
	2.5	16.0	15.8	12.5	11.0
	6.0	16.2	16.0	12.5	11.0
	6.5	16.8	16.0	12.5	11.0
	10.0	18.0	16.0	12.5	11.0
	12.5	19.1	16.0	12.5	11.0
	15.5	19.4	16.0	12.5	11.0